ELV AND RoHS COMPLIANT

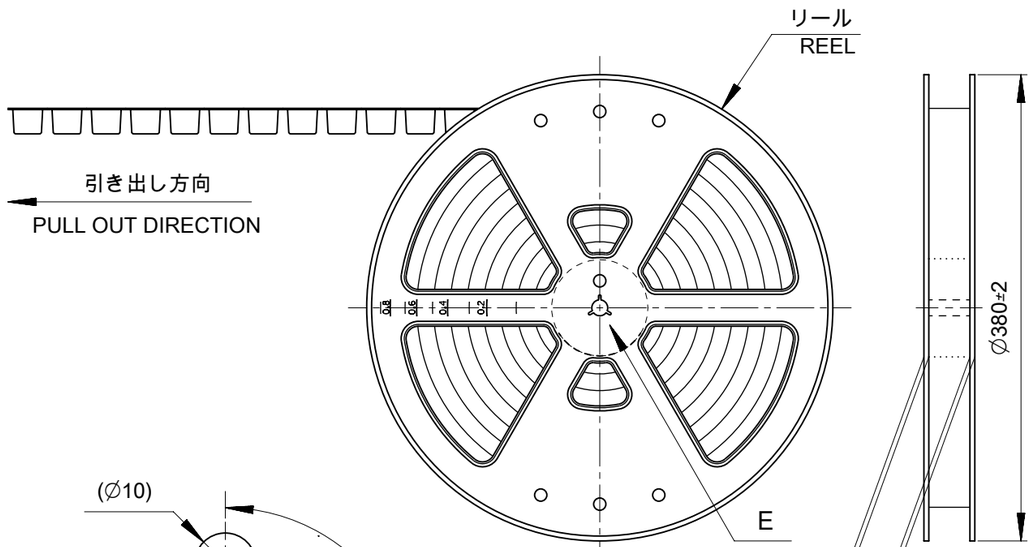


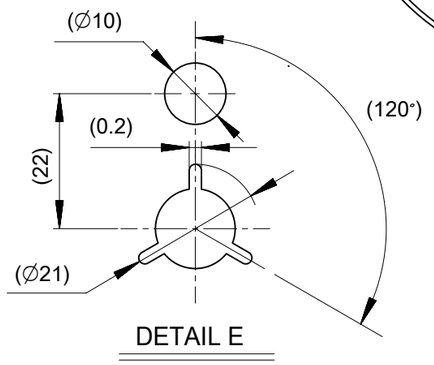


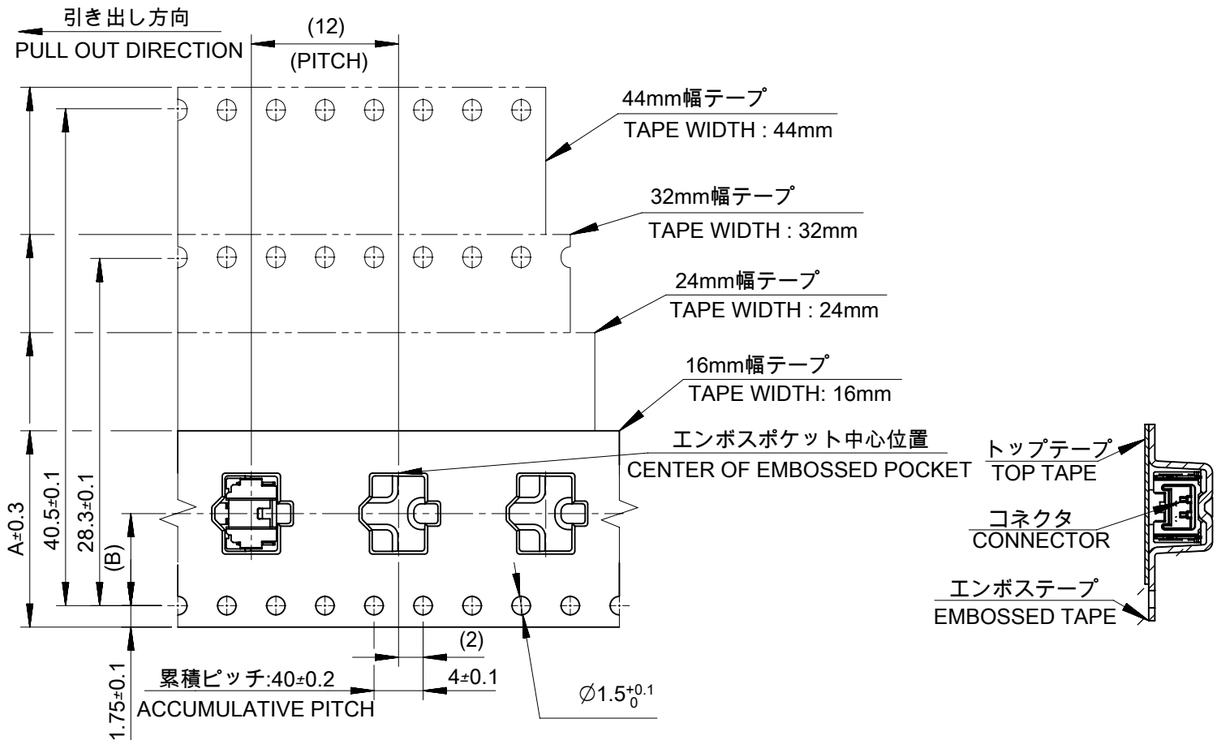


NOTES

1. 製品詳細寸法は製品単体図面を参照して下さい。
   FOR DETAIL OF CONNECTOR DIMENSIONS,
   PLEASE SEE THE DRAWING OF CONNECTOR ITSELF (NOT PACKAGED).
2. 梱包数量　:　1200個
   NUMBER OF CONNECTIORS : 1200 PIECES/REEL.
3. リードテープ長さ
   LEAD TAPE LENGTH

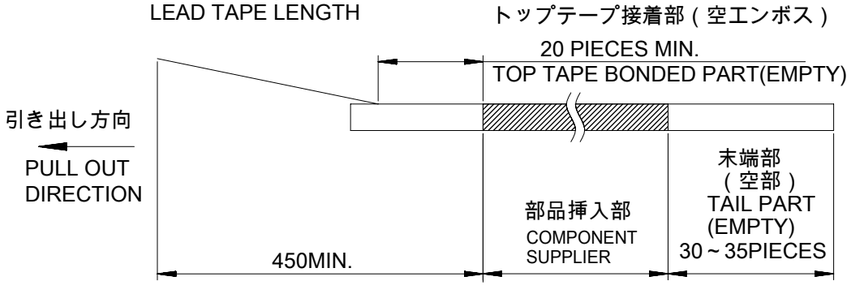


4. 材料　MATERIAL
   キャリアテープ：ポリスチレン（　）PS
   CARRIER TAPE：POLYSTYRENE（PS）
   トップテープ：ポリエステル（　　）PETその他
   TOP TAPE：POLYESTER（PET）、OTHER
   リール：ポリスチレン（　）PS<リサイクル材を含む>
   REEL：POLYSTYRENE（PS）<RECYCLE MATERIAL CONTAINED>
5. トップテープの剥離強度については、IEC60286-3に準拠。
   TOP TAPE PEEL FORCE IS DEFINED BY IEC60286-3.

| D | C | B | エンボステープ幅 WIDTH OF TAPE A | エンボス梱包 EMBOSSED TAPE PACKAGE / オーダー番号 ORDER NO. | 極数 CKT. NO. |
|---|---|---|---|---|---|
| 49.4 | 45.4 | 20.2 | 44 | 504195167* | 16 |
| 49.4 | 45.4 | 20.2 | 44 | 504195157* | 15 |
| 49.4 | 45.4 | 20.2 | 44 | 504195147* | 14 |
| 37.4 | 33.4 | 14.2 | 32 | 504195127* | 12 |
| 37.4 | 33.4 | 14.2 | 32 | 504195117* | 11 |
| 37.4 | 33.4 | 14.2 | 32 | 504195107* | 10 |
| 29.4 | 25.4 | 11.5 | 24 | 504195097* | 9 |
| 29.4 | 25.4 | 11.5 | 24 | 504195087* | 8 |
| 29.4 | 25.4 | 11.5 | 24 | 504195077* | 7 |
| 29.4 | 25.4 | 11.5 | 24 | 504195067* | 6 |
| 29.4 | 25.4 | 11.5 | 24 | 504195057* | 5 |
| 29.4 | 25.4 | 11.5 | 24 | 504195047* | 4 |
| 21.4 | 17.4 | 7.5 | 16 | 504195037* | 3 |
| 21.4 | 17.4 | 7.5 | 16 | 504195027* | 2 |

THIS DRAWING CONTAINS INFORMATION THAT IS PROPRIETARY TO MOLEX ELECTRONIC TECHNOLOGIES, LLC AND SHOULD NOT BE USED WITHOUT WRITTEN PERMISSION

| | |
|---|---|
| DIMENSION UNITS | mm |
| SCALE | 2:1 |
| GENERAL TOLERANCES (UNLESS SPECIFIED) | |
| ANGULAR TOL | ± 1.0 ° |
| 4 PLACES | ± 0.2 |
| 3 PLACES | ± 0.25 |
| 2 PLACES | ± 0.3 |
| 1 PLACE | ± 0.1 |
| 0 PLACES | ± |
| DRAFT WHERE APPLICABLE MUST REMAIN WITHIN DIMENSIONS | |

CURRENT REV DESC: REMOVED OBSOLETED PART NUMBERS AS PER PCN#515988

EC NO: 840975
DRWN: SAMPRS 2025/11/14
CHK'D: GGA 2025/12/01
APPR: GGA 2025/12/01

INITIAL REVISION:
DRWN: SSATO02 2013/07/29
APPR: NUKITA 2013/08/08

THIRD ANGLE PROJECTION | DRAWING: A3-SIZE | SERIES: 504195

molex

EMBOSSED TAPE PKG FOR
1.25 WTB SINGLE RA SMT

PRODUCT CUSTOMER DRAWING

| DOCUMENT NUMBER | DOC TYPE | DOC PART | REVISION |
|---|---|---|---|
| SD-504195-001 | PSD | 001 | A3 |

| MATERIAL NUMBER | CUSTOMER | SHEET NUMBER |
|---|---|---|
| SEE CHART | GENERAL MARKET | 1 OF 2 |

| DOCUMENT STATUS | P1 | RELEASE DATE | 2025/12/01 13:34:00 |
|---|---|---|---|

FORMAT: master-tb-prod-A3
REVISION: J1
DATE: 2021/05/01

ELV AND RoHS COMPLIANT

| HSG COLOR NATURAL(BEIGE) | |
|---|---|
| 5041951670 | 16 |
| 5041951570 | 15 |
| 5041951470 | 14 |
| 5041951270 | 12 |
| 5041951170 | 11 |
| 5041951070 | 10 |
| 5041950970 | 9 |
| 5041950870 | 8 |
| 5041950770 | 7 |
| 5041950670 | 6 |
| 5041950570 | 5 |
| 5041950470 | 4 |
| 5041950370 | 3 |
| 5041950270 | 2 |
| EMBOSSED TAPE PACKAGE | 極数 CKT.NO. |
| オーダー番号 ORDER NO. | |

THIS DRAWING CONTAINS INFORMATION THAT IS PROPRIETARY TO MOLEX ELECTRONIC TECHNOLOGIES, LLC AND SHOULD NOT BE USED WITHOUT WRITTEN PERMISSION

| DIMENSION UNITS | SCALE |
|---|---|
| mm | 2:1 |

| GENERAL TOLERANCES (UNLESS SPECIFIED) | | |
|---|---|---|
| ANGULAR TOL | ± | 1.0 ° |
| 4 PLACES | ± | 0.2 |
| 3 PLACES | ± | 0.25 |
| 2 PLACES | ± | 0.3 |
| 1 PLACE | ± | 0.1 |
| 0 PLACES | ± | |

DRAFT WHERE APPLICABLE MUST REMAIN WITHIN DIMENSIONS

CURRENT REV DESC: REMOVED OBSOLETED PART NUMBERS AS PER PCN#515988

EC NO: 840975
DRWN: SAMPRS 2025/11/14
CHK'D: GGA 2025/12/01
APPR: GGA 2025/12/01

INITIAL REVISION:
DRWN: SSATO02 2013/07/29
APPR: NUKITA 2013/08/08

molex

EMBOSSED TAPE PKG FOR
1.25 WTB SINGLE RA SMT

PRODUCT CUSTOMER DRAWING

| DOCUMENT NUMBER | DOC TYPE | DOC PART | REVISION |
|---|---|---|---|
| SD-504195-001 | PSD | 001 | A3 |

| THIRD ANGLE PROJECTION | DRAWING | SERIES | MATERIAL NUMBER | CUSTOMER | SHEET NUMBER |
|---|---|---|---|---|---|
| | A3-SIZE | 504195 | SEE CHART | GENERAL MARKET | 2 OF 2 |

| DOCUMENT STATUS | P1 | RELEASE DATE | 2025/12/01 13:34:00 |
|---|---|---|---|

FORMAT: master-ib-prod-A3
REVISION: J1
DATE: 2021/05/01

ELV AND RoHS COMPLIANT

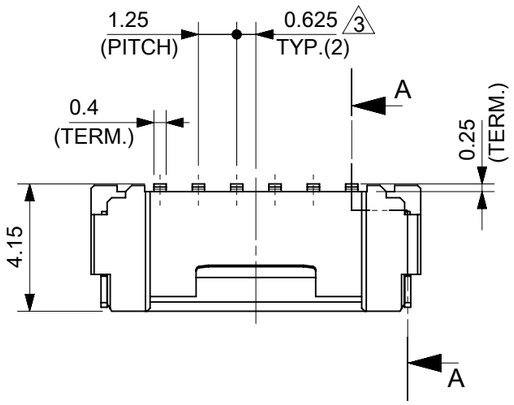


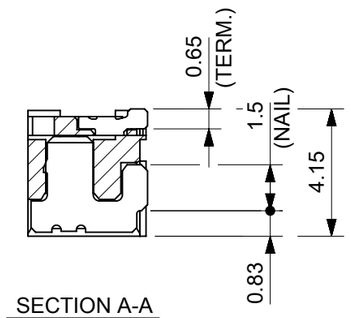


SECTION A-A

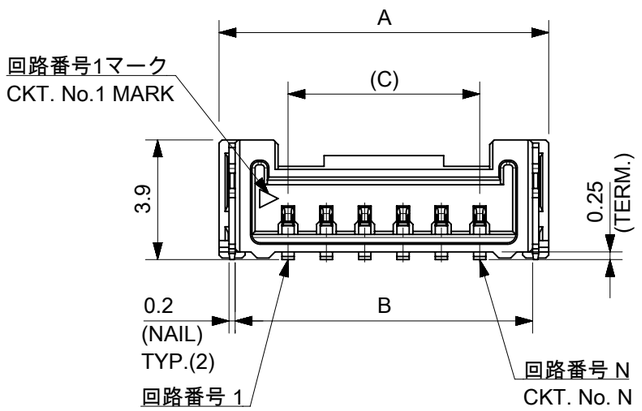


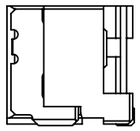

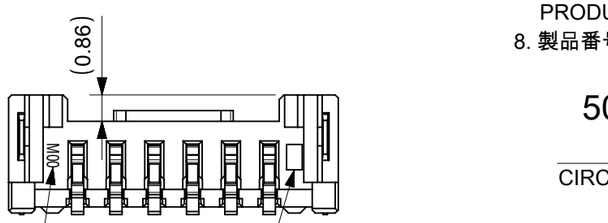


トレードマーク
TRADE MARK

キャビティ番号 及び 金型番号
CAVITY. & MOLD NO.

NOTES

1. 嵌合相手：504193**0*
   MATE WITH : 504193**0*
2. 端子テール部 及び ネイルの平坦度：0.1MAX.
   TAIL AND NAIL COPLANARITY TO BE 0.1 MAX.
3. 極数 / 2 = 偶数に適用。
   APPLY FOR CKT. SIZE / 2 = EVEN.
4. 端子テール部 及び ネイルに錫めっきを使用しているため、
   外観に摺動痕が付く場合が御座います。
   THE WOUND OF FRICTION MIGHT ADHERE TO EXTERNALS
   BECAUSE THE TIN PLATING IS USED FOR THA TAIL AND NAIL.
5. 本製品のプラスチック部に黒点等が確認される場合や
   色合いが異なる場合がありますが、製品性能に影響はありません。
   THERE IS NO INFLUENCE IN THE PRODUCT PERFORMANCE THOUGH
   THE BLACK SPOT ETC. MIGHT BE CONFIRMED TO THE PLASTIC PART
   OF THIS PRODUCT AND THE SHADE MIGHT BE DIFFERENT.
6. アプリケーション仕様書(コネクタ取扱説明書)：AS-504193-001/-002
   APPLICATION SPECIFICATIONS(CONNECTOR MANUAL)□AS-504193-001/-002
7. 製品仕様書：PS-504193-001
   PRODUCT SPECIFICATION: PS-504193-001
8. 製品番号 MATERIAL No.

504195**0*
極数 CIRCUIT SIZE
色 COLOR

| NO. | COLOR |
|---|---|
| 0 | NATURAL |
| 1 | BLACK |
| 2 | RED |
| 3 | YELLOW |
| 4 | BLUE |
| 6 | GREEN |
| 8 | ORANGE |

| 部品 PART | 材質 MATERIAL |
|---|---|
| ハウジング HOUSING | ポリアミド(PA), ガラス充填, UL94 V-0,　色：SEET3参照<br>POLYAMIDE(PA), GALASS FILED, UL94 V-0, COLOR : SEE SHEET 3 |
| ターミナル TERMINAL | 黄銅<br>BRASS |
| | 錫めっき：1.0 micro-meter MIN.<br>TIN |
| | ニッケルめっき（下地）: 1.0 micro-meter MIN.<br>NICKEL (UNDER PLATING) |
| ネイル NAIL | 黄銅<br>BRASS |
| | 錫めっき: 1.0 micro-meter MIN.<br>TIN |
| | ニッケルめっき（下地）: 1.0 micro-meter MIN.<br>NICKEL (UNDER PLATING) |

| D | C | B | A | EMBOSSED TAPE PACKAGE / オーダー番号 ORDER NO. | 極数 CKT. NO. |
|---|---|---|---|---|---|
| 10.7 | 18.75 | 22.2 | 23.25 | 504195167* | 16 |
| 10.7 | 17.5 | 20.95 | 22 | 504195157* | 15 |
| 10.7 | 16.25 | 19.7 | 20.75 | 504195147* | 14 |
| 9.2 | 13.75 | 17.2 | 18.25 | 504195127* | 12 |
| 9.2 | 12.5 | 15.95 | 17 | 504195117* | 11 |
| 9.2 | 11.25 | 14.7 | 15.75 | 504195107* | 10 |
| 6.7 | 10 | 13.45 | 14.5 | 504195097* | 9 |
| 6.7 | 8.75 | 12.2 | 13.25 | 504195087* | 8 |
| 6.7 | 7.5 | 10.95 | 12 | 504195077* | 7 |
| 6.6 | 6.25 | 9.7 | 10.75 | 504195067* | 6 |
| 5.35 | 5 | 8.45 | 9.5 | 504195057* | 5 |
| 4.1 | 3.75 | 7.2 | 8.25 | 504195047* | 4 |
| 2.85 | 2.5 | 5.95 | 7 | 504195037* | 3 |
| 1.9 | 1.25 | 4.7 | 5.75 | 504195027* | 2 |

GENERAL TOLERANCES (UNLESS SPECIFIED)

| | |
|---|---|
| 0.25 UNDER | ± 0.03 |
| 0.25 OVER 0.5 UNDER | ± 0.05 |
| 0.5 OVER 1.0 UNDER | ± 0.1 |
| 1.0 OVER 10 UNDER | ± 0.2 |
| 10 OVER 30 UNDER | ± 0.25 |
| 30 OVER | ± 0.3 |
| ANGULAR | ± 1° |

DRAFT WHERE APPLICABLE MUST REMAIN WITHIN DIMENSIONS

THIS DRAWING CONTAINS INFORMATION THAT IS PROPRIETARY TO MOLEX ELECTRONIC TECHNOLOGIES, LLC AND SHOULD NOT BE USED WITHOUT WRITTEN PERMISSION

DIMENSION UNITS: mm　SCALE: 5:1

GENERAL TOLERANCES (UNLESS SPECIFIED)

| | |
|---|---|
| ANGULAR TOL ± | 1.0 ° |
| 4 PLACES ± | 0.2 |
| 3 PLACES ± | 0.25 |
| 2 PLACES ± | 0.3 |
| 1 PLACE ± | 0.1 |
| 0 PLACES ± | |

DRAFT WHERE APPLICABLE MUST REMAIN WITHIN DIMENSIONS

CURRENT REV DESC: REMOVED OBSOLETED PART NUMBERS AS PER PCN#515988

EC NO: 841568
DRWN: SAMPRS 2025/11/25
CHK'D: GGA 2025/12/01
APPR: GGA 2025/12/01

INITIAL REVISION:
DRWN: SSATO02 2013/07/29
APPR: NUKITA 2013/08/01

THIRD ANGLE PROJECTION | DRAWING: A3-SIZE | SERIES: 504195

molex

1.25 WTB SINGLE SMT
RA PLUG ASS'Y

PRODUCT CUSTOMER DRAWING

| DOCUMENT NUMBER | DOC TYPE | DOC PART | REVISION |
|---|---|---|---|
| SD-504195-002 | PSD | 001 | C |

| MATERIAL NUMBER | CUSTOMER | SHEET NUMBER |
|---|---|---|
| SEE SHEET 3 | GENERAL MARKET | 1 OF 3 |

| DOCUMENT STATUS | P1 | RELEASE DATE | 2025/12/01 15:19:03 |
|---|---|---|---|

FORMAT: master-tb-prod-A3
REVISION: J1
DATE: 2021/05/01

ELV AND RoHS COMPLIANT

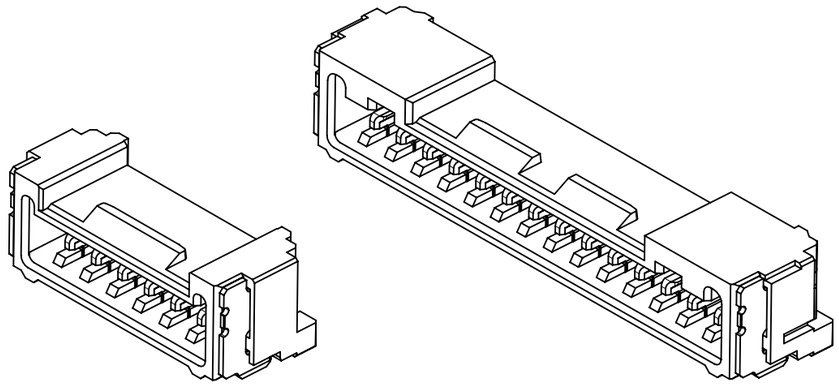

2 ~ 13 CKT.　　14 ~ 16 CKT.

係止形状違い
DIFFERENCE OF LOCK SHAPE

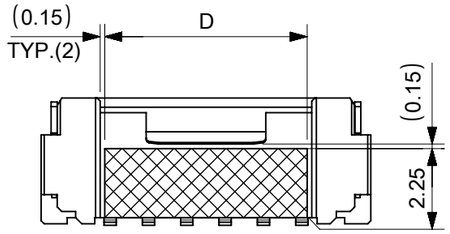


吸着範囲
VACUUM AREA

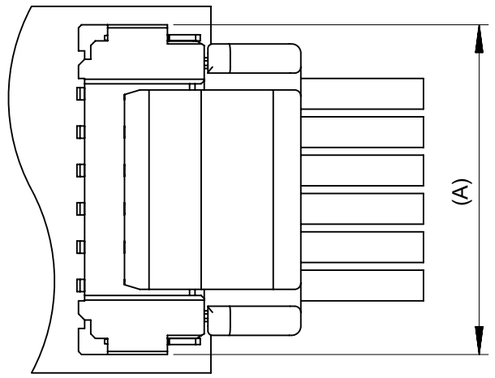


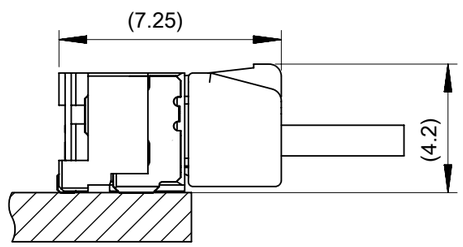


嵌合図
MATED CONNECTORS

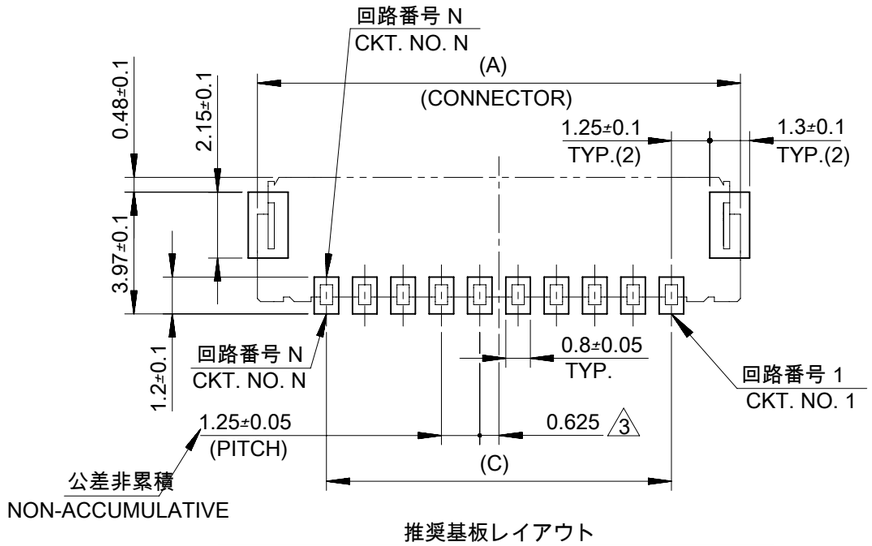


推奨基板レイアウト
RECCOMENDED P.C.B. PATTERN LAYOUT
(参考：メタルマスク厚さ：150μm, マスク開口率100%)
(REFERENCE：MATAL MASK THICKNESS : 150μm, APERTURE RASIO : 100%)

| GENERAL TOLERANCES (UNLESS SPECIFIED) | |
|---|---|
| 0.25 UNDER | ± 0.03 |
| 0.25 OVER 0.5 UNDER | ± 0.05 |
| 0.5 OVER 1.0 UNDER | ± 0.1 |
| 1.0 OVER 10 UNDER | ± 0.2 |
| 10 OVER 30 UNDER | ± 0.25 |
| 30 OVER | ± 0.3 |
| ANGULAR | ± 1 ° |

DRAFT WHERE APPLICABLE MUST REMAIN WITHIN DIMENSIONS

THIS DRAWING CONTAINS INFORMATION THAT IS PROPRIETARY TO MOLEX ELECTRONIC TECHNOLOGIES, LLC AND SHOULD NOT BE USED WITHOUT WRITTEN PERMISSION

| DIMENSION UNITS | SCALE |
|---|---|
| mm | 5:1 |

| GENERAL TOLERANCES (UNLESS SPECIFIED) | |
|---|---|
| ANGULAR TOL | ± 1.0 ° |
| 4 PLACES | ± 0.2 |
| 3 PLACES | ± 0.25 |
| 2 PLACES | ± 0.3 |
| 1 PLACE | ± 0.1 |
| 0 PLACES | ± |

DRAFT WHERE APPLICABLE MUST REMAIN WITHIN DIMENSIONS

CURRENT REV DESC: REMOVED OBSOLETED PART NUMBERS AS PER PCN#515988

EC NO: 841568
DRWN: SAMPRS 2025/11/25
CHK'D: GGA 2025/12/01
APPR: GGA 2025/12/01

INITIAL REVISION:
DRWN: SSATO02 2013/07/29
APPR: NUKITA 2013/08/08

THIRD ANGLE PROJECTION | DRAWING: A3-SIZE | SERIES: 504195

molex

1.25 WTB SINGLE SMT
RA PLUG ASS'Y

PRODUCT CUSTOMER DRAWING

| DOCUMENT NUMBER | DOC TYPE | DOC PART | REVISION |
|---|---|---|---|
| SD-504195-002 | PSD | 001 | C |

| MATERIAL NUMBER | CUSTOMER | SHEET NUMBER |
|---|---|---|
| SEE SHEET 3 | GENERAL MARKET | 2 OF 3 |

| DOCUMENT STATUS | P1 | RELEASE DATE | 2025/12/01 15:19:03 |
|---|---|---|---|

FORMAT: master-tb-prod-A3
REVISION: J1
DATE: 2021/05/01

ELV AND RoHS COMPLIANT

| HSG COLOR NATURAL(BEIGE) | |
|---|---|
| 5041951670 | 16 |
| 5041951570 | 15 |
| 5041951470 | 14 |
| 5041951270 | 12 |
| 5041951170 | 11 |
| 5041951070 | 10 |
| 5041950970 | 9 |
| 5041950870 | 8 |
| 5041950770 | 7 |
| 5041950670 | 6 |
| 5041950570 | 5 |
| 5041950470 | 4 |
| 5041950370 | 3 |
| 5041950270 | 2 |
| EMBOSSED TAPE PACKAGE | 極数 CKT.NO. |
| オーダー番号 ORDER NO. | |

| GENERAL TOLERANCES (UNLESS SPECIFIED) | |
|---|---|
| 0.25 UNDER | ± 0.03 |
| 0.25 OVER 0.5 UNDER | ± 0.05 |
| 0.5 OVER 1.0 UNDER | ± 0.1 |
| 1.0 OVER 10 UNDER | ± 0.2 |
| 10 OVER 30 UNDER | ± 0.25 |
| 30 OVER | ± 0.3 |
| ANGULAR | ± 1 ° |

DRAFT WHERE APPLICABLE MUST REMAIN WITHIN DIMENSIONS

THIS DRAWING CONTAINS INFORMATION THAT IS PROPRIETARY TO MOLEX ELECTRONIC TECHNOLOGIES, LLC AND SHOULD NOT BE USED WITHOUT WRITTEN PERMISSION

| DIMENSION UNITS | SCALE |
|---|---|
| mm | 5:1 |

| GENERAL TOLERANCES (UNLESS SPECIFIED) | |
|---|---|
| ANGULAR TOL | ± 1.0 ° |
| 4 PLACES | ± 0.2 |
| 3 PLACES | ± 0.25 |
| 2 PLACES | ± 0.3 |
| 1 PLACE | ± 0.1 |
| 0 PLACES | ± |

DRAFT WHERE APPLICABLE MUST REMAIN WITHIN DIMENSIONS

CURRENT REV DESC: REMOVED OBSOLETED PART NUMBERS AS PER PCN#515988

EC NO: 841568
DRWN: SAMPRS 2025/11/25
CHK'D: GGA 2025/12/01
APPR: GGA 2025/12/01

INITIAL REVISION:
DRWN: SSATO02 2013/07/29
APPR: NUKITA 2013/08/08

molex

1.25 WTB SINGLE SMT
RA PLUG ASS'Y

PRODUCT CUSTOMER DRAWING

| DOCUMENT NUMBER | DOC TYPE | DOC PART | REVISION |
|---|---|---|---|
| SD-504195-002 | PSD | 001 | C |

| THIRD ANGLE PROJECTION | DRAWING | SERIES | MATERIAL NUMBER | CUSTOMER | SHEET NUMBER |
|---|---|---|---|---|---|
| | A3-SIZE | 504195 | SEE SHEET 3 | GENERAL MARKET | 3 OF 3 |

| DOCUMENT STATUS | P1 | RELEASE DATE | 2025/12/01 15:19:03 |
|---|---|---|---|

FORMAT: master-ib-prod-A3
REVISION: J1
DATE: 2021/05/01