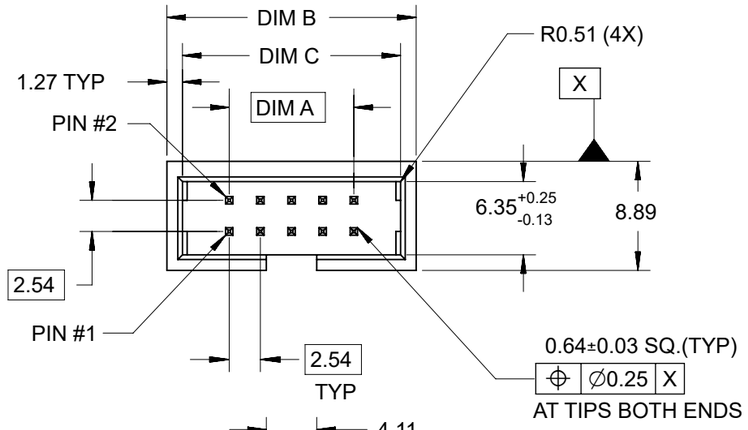

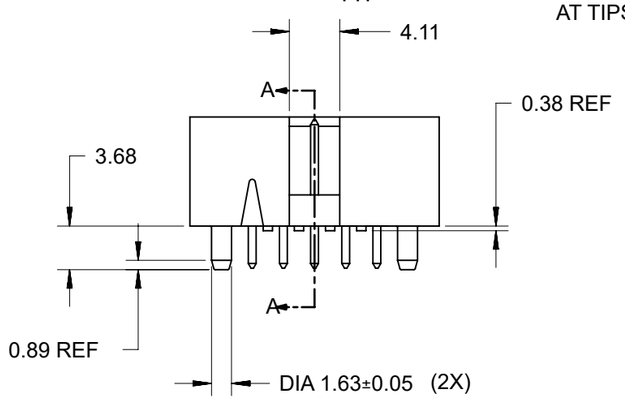

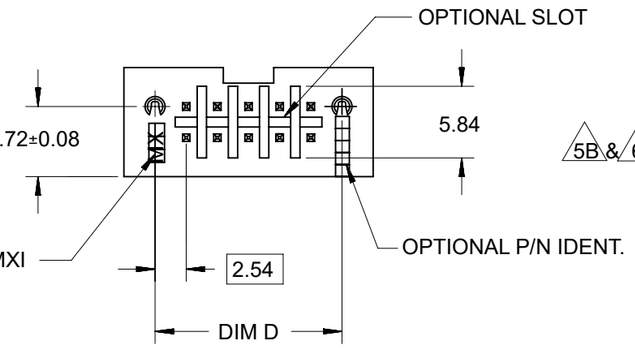

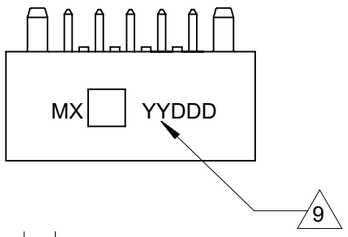

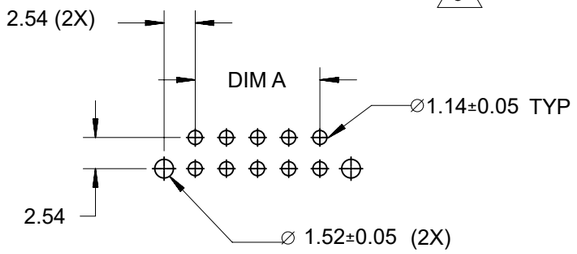

RECOMMENDED PCB PATTERN

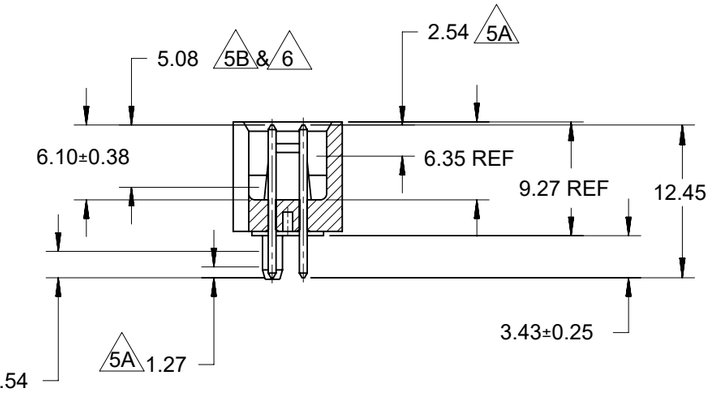

SECTION A-A

ASSEMBLY P/N	CKT SIZE	DIM A	DIM B	DIM C	DIM D
87834-0411	04	2.54	12.70	10.16	7.62
87834-0611	06	5.08	15.24	12.70	10.16
87834-0811	08	7.62	17.78	15.24	12.70
87834-1011	10	10.16	20.32	17.78	15.24
87834-1211	12	12.70	22.86	20.32	17.78
87834-1411	14	15.24	25.40	22.86	20.32
87834-1611	16	17.78	27.94	25.40	22.86
87834-1811	18	20.32	30.48	27.94	25.40
87834-2011	20	22.86	33.02	30.48	27.94
87834-2411	24	27.94	38.10	35.56	33.02
87834-2611	26	30.48	40.64	38.10	35.56
87834-3011	30	35.56	45.72	43.18	40.64
87834-3411	34	40.64	50.80	48.26	45.72
87834-4011	40	48.26	58.42	55.88	53.34
87834-4411	44	53.34	63.50	60.96	58.42
87834-5011	50	60.96	71.12	60.58	66.04
87834-6011	60	73.66	83.82	81.28	78.74

PART NUMBER LEGEND

87834 - * * 1 1

CKT SIZES

NOTES :

1. MATERIAL :
   HOUSING : NYLON 46 GLASS FILLED., UL94V-0, COLOR: BIEGE.
   PIN : COPPER ALLOY.
2. PIN PUSHOUT FORCE 0.91 KG MIN.
3. PRODUCT SPECIFICATION PS-70246-100 APPLIES.
4. WAFER TO BE FLAT WITHIN 0.03MM/CM
5. DIMENSIONS FOR PLATING LOCATIONS : A - MEASURE POINT FOR THICKNESS.
   B - MINIMUM COVERAGE.
6. GOLD END OF PIN UNLESS OVERALL PLATED.
7. FINISH :
   0.13um MIN GOLD FLASH OVER 1.02um MIN.PD/NI
   IN SELECTED AREA AND 2.5um MIN.TIN IN SELECTED
   AREA OVER 1.27um MIN NICKEL OVERALL
8. FOR ILLUSTRATION PURPOSE A 10 CKT IS SHOWN.
9. OPTIONAL LOCATION FOR MANUFACTURER/YEAR/DAY MARKING IF REQUIRED BY CUSTOMER

THIS DRAWING CONTAINS INFORMATION THAT IS PROPRIETARY TO MOLEX ELECTRONIC TECHNOLOGIES, LLC AND SHOULD NOT BE USED WITHOUT WRITTEN PERMISSION

DIMENSION UNITS: mm	SCALE: NTS	CURRENT REV DESC: REMOVED OBSOLETED PART NUMBERS AS PER PCN#513386.	molex
GENERAL TOLERANCES (UNLESS SPECIFIED)	MM / INCH	EC NO: 777443	SALES DRAWING, C-GRID SHROUDED W/SLOTTED & IN-LINE POLARIZATION PEG
4 PLACES	± / ±	DRWN: RAVINR1 2023/08/04	
3 PLACES	± / ±	CHK'D: GGA 2024/03/15	PRODUCT CUSTOMER DRAWING
2 PLACES	± 0.2 / ±	APPR: GGA 2024/03/15	
1 PLACE	± / ±	INITIAL REVISION:	DOCUMENT NUMBER: SD-87834-024 / DOC TYPE: PSD / DOC PART: 001 / REVISION: A5
0 PLACES	± / ±	DRWN: RSHAN 2003/11/21	
ANGULAR TOL	± 3.0 °	APPR: SKTOH 2003/12/06	
DRAFT WHERE APPLICABLE MUST REMAIN WITHIN DIMENSIONS		THIRD ANGLE PROJECTION / DRAWING: A3-SIZE / SERIES: 87834	MATERIAL NUMBER: SEE TABLE / CUSTOMER: GENERAL MARKET / SHEET NUMBER: 1 OF 1

DOCUMENT STATUS	P1	RELEASE DATE	2024/03/15 07:48:23

FORMAT: Met-lega-master-tb-prod-A3
REVISION: E1
DATE: 2021/05/01