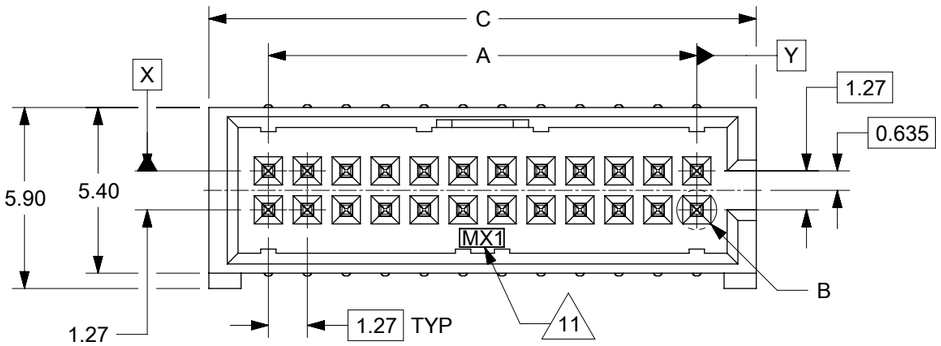


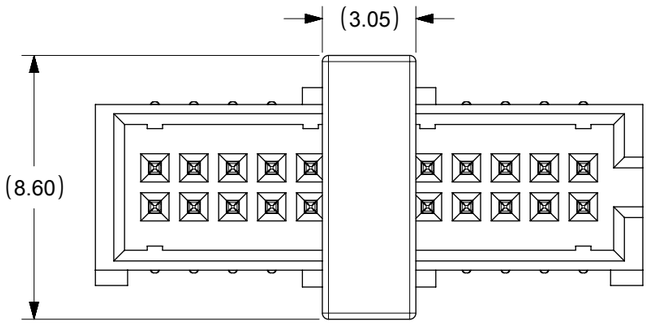


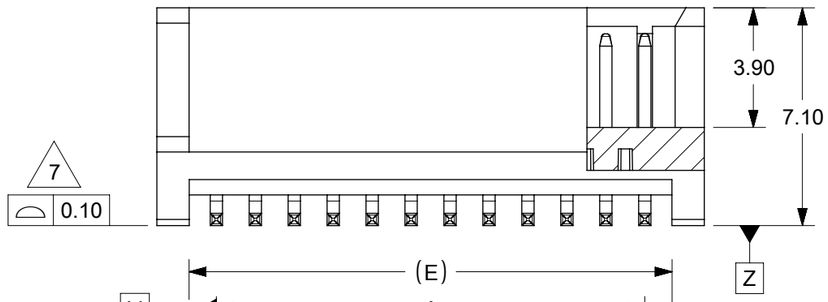


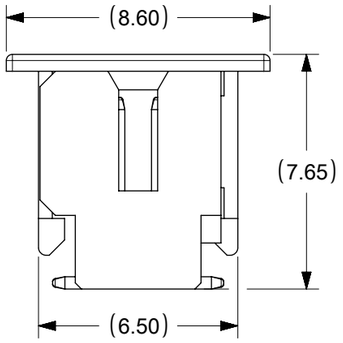


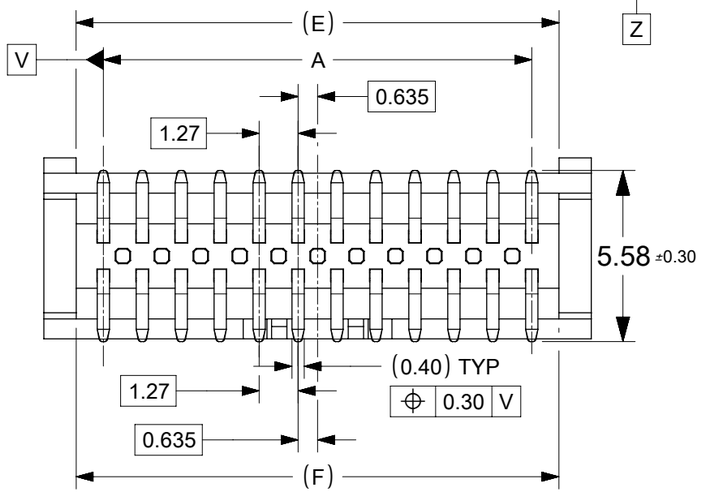


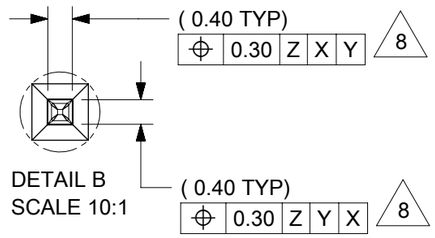


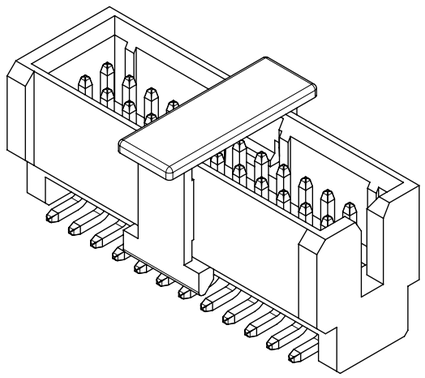

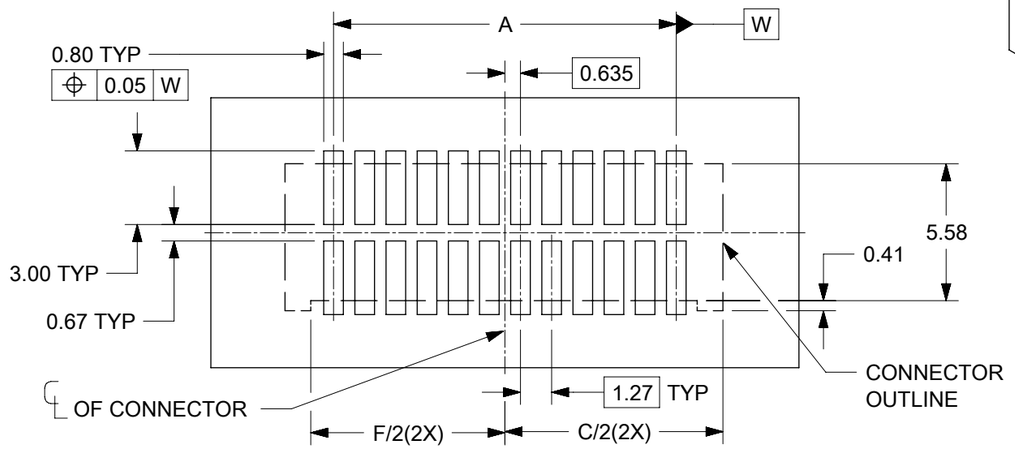


RECOMMENDED PCB LAYOUT
TOLERANCE ±0.05

| CKT SIZE | DIMENSION | | | | | |
|---|---|---|---|---|---|---|
| | A | B | C | D | E | F |
| 4 | 1.27 | 3.25 | 5.15 | - | 3.05 | 3.04 |
| 6 | 2.54 | 4.52 | 6.42 | 4.85 | 4.32 | 4.31 |
| 8 | 3.81 | 5.79 | 7.69 | 4.85 | 5.59 | 5.58 |
| 10 | 5.08 | 7.06 | 8.96 | 4.85 | 6.86 | 6.85 |
| 12 | 6.35 | 8.33 | 10.23 | 4.85 | 8.13 | 8.12 |
| 14 | 7.62 | 9.60 | 11.50 | 4.85 | 9.40 | 9.39 |
| 16 | 8.89 | 10.87 | 12.77 | 4.85 | 10.67 | 10.66 |
| 18 | 10.16 | 12.14 | 14.04 | 4.85 | 11.94 | 11.93 |
| 20 | 11.43 | 13.41 | 15.31 | 4.85 | 13.21 | 13.20 |
| 22 | 12.70 | 14.68 | 16.58 | 4.85 | 14.48 | 14.47 |
| 24 | 13.97 | 15.95 | 17.85 | 4.85 | 15.75 | 15.74 |

NOTES:
1. FOR ILLUSTRATION PURPOSES, 24 CIRCUIT SIZE WAFER IS SHOWN.
2. MATERIAL :
   HOUSING : LIQUID CRYSTALLINE POLYMER (LCP), GLASS-FILLED UL94V-0, BLACK
   BANDOLIER PIN :COPPER ALLOY, 0.40MM SQ. PIN
   PICK AND PLACE CAP: POLYAMIDE (PA), GLASS-FILLED, UL94V-0, BLACK
3. FINISHES: SEE SHEET 2
4. PRODUCT SPECIFICATION: 2009890001 (PS)
5. PACKAGING SPECIFICATION: 2009890001_PK(TUBE)
   2009890002_PK(T&R)
6. MATES WITH: 78120 SERIES
7. COPLANARITY IS TO BE MEASURED BY RESTING THE SOLDER TAIL ON A GAUGE SURFACE
8. POSITIONING TO BE CONTROLLED BASED ON PIN TIP
9. BEND DEPRESSION ON SMT TAIL IS ACCEPTACLE SO LONG AS IT DOES NOT AFFECT THE OVERALL COPLANARITY OF THE TAIL.
10. PARTS CONFORMS TO CLASS "B" REQUIREMENT OF COSMETIC SPECIFICATION PS-45499-002
11. MOLEX LOGO AND CAVITY LOCATED AS SHOWN.
12. NON-FUNCTIONAL CORING IS SUBJECTED TO CHANGES WITHOUT NOTICE.
13. THE ABOVE 24 CKT SHOWN IS FOR ILLUSTRATION ONLY.

THIS DRAWING CONTAINS INFORMATION THAT IS PROPRIETARY TO MOLEX ELECTRONIC TECHNOLOGIES, LLC AND SHOULD NOT BE USED WITHOUT WRITTEN PERMISSION

| | |
|---|---|
| DIMENSION UNITS | mm |
| SCALE | NTS |
| GENERAL TOLERANCES (UNLESS SPECIFIED) | |
| ANGULAR TOL | ± 3.0 ° |
| 4 PLACES | ± |
| 3 PLACES | ± |
| 2 PLACES | ± 0.2 |
| 1 PLACE | ± |
| 0 PLACES | ± |
| DRAFT WHERE APPLICABLE MUST REMAIN WITHIN DIMENSIONS | |

CURRENT REV DESC: REMOVED OBSOLETED PART NUMBERS AS PER PCN #515183

EC NO: 826030
DRWN: PRANAA 2025/06/27
CHK'D: GGA 2025/07/01
APPR: GGA 2025/07/01

INITIAL REVISION:
DRWN: SCHEONG 2016/01/15
APPR: KHLIM 2016/11/24

molex

1.27MM PITCH SLIM-GRID
VERTICAL SMT SHROUDED HEADER

PRODUCT CUSTOMER DRAWING

| DOCUMENT NUMBER | DOC TYPE | DOC PART | REVISION |
|---|---|---|---|
| 2009890024 | PSD | 000 | A6 |

| THIRD ANGLE PROJECTION | DRAWING | SERIES | MATERIAL NUMBER | CUSTOMER | SHEET NUMBER |
|---|---|---|---|---|---|
| | A3-SIZE | 200989 | SEE TABLE | GENERAL MARKET | 1 OF 3 |

| DOCUMENT STATUS | P1 | RELEASE DATE | 2025/07/01 07:04:05 |
|---|---|---|---|

FORMAT: master-tb-prod-A3
REVISION: J1
DATE: 2021/05/01

| CKT SIZE | ASSEMBLY WITHOUT CAP IN TUBE P/N | ASSEMBLY WITH CAP IN TUBE P/N | ASSEMBLY WITH CAP IN T&R P/N | TAPE & REEL TOOLED (A5) |
|---|---|---|---|---|
| 4 | 200989-0004 | | 200989-2004 | N |
| | 200989-0104 | 200989-1104 | 200989-2104 | |
| | 200989-0204 | 200989-1204 | 200989-2204 | |
| 6 | 200989-0006 | 200989-1006 | 200989-2006 | Y |
| | 200989-0106 | 200989-1106 | 200989-2106 | |
| | 200989-0206 | --- | 200989-2206 | |
| 8 | 200989-0008 | --- | --- | N |
| | 200989-0108 | --- | 200989-2108 | |
| | 200989-0208 | --- | 200989-2208 | |
| 10 | 200989-0010 | --- | --- | Y |
| | 200989-0110 | 200989-1110 | --- | |
| | 200989-0210 | 200989-1210 | 200989-2210 | |
| 12 | 200989-0012 | --- | 200989-2012 | N |
| | 200989-0112 | --- | 200989-2112 | |
| | 200989-0212 | --- | 200989-2212 | |
| 14 | 200989-0014 | --- | 200989-2014 | N |
| | 200989-0114 | --- | 200989-2114 | |
| | 200989-0214 | --- | 200989-2214 | |
| 16 | 200989-0016 | 200989-1016 | 200989-2016 | N |
| | 200989-0116 | --- | 200989-2116 | |
| | 200989-0216 | --- | 200989-2216 | |
| 18 | 200989-0018 | --- | 200989-2018 | Y |
| | 200989-0118 | --- | --- | |
| | 200989-0218 | --- | --- | |
| 20 | 200989-0020 | 200989-1020 | --- | N |
| | 200989-0120 | 200989-1120 | 200989-2120 | |
| | 200989-0220 | --- | 200989-2220 | |
| 22 | 200989-0022 | --- | 200989-2022 | Y |
| | 200989-0122 | --- | --- | |
| | 200989-0222 | --- | --- | |
| 24 | 200989-0024 | --- | 200989-2024 | N |
| | 200989-0124 | --- | 200989-2124 | |
| | 200989-0224 | --- | 200989-2224 | |

# LEGEND

200989 - X X X X

**CKT SIZE**

04 = 4 CKTS
.
24 = 24 CKTS

**FINISHES**

0 = 0.05um Au MIN. GOLD ON CONTACT
AND 2.00um MIN. MATTE TIN ON SOLDERTAIL
OVER 1.27um MIN. NICKEL UNDERPLATE OVERALL
1 = 0.38um Au MIN. GOLD ON CONTACT
AND 2.00um MIN. MATTE TIN ON SOLDERTAIL
OVER 1.27um MIN. NICKEL UNDERPLATE OVERALL
2 = 0.76um Au MIN. GOLD ON CONTACT
AND 2.00um MIN. MATTE TIN ON SOLDERTAIL
OVER 1.27um MIN. NICKEL UNDERPLATE OVERALL

**PACKAGING AND CAP OPTION**

0 = TUBE & WITHOUT CAP
1 = TUBE & WITH CAP
2 = TAPE & REEL (T&R) (NOT TOOLED)

THIS DRAWING CONTAINS INFORMATION THAT IS PROPRIETARY TO MOLEX ELECTRONIC TECHNOLOGIES, LLC AND SHOULD NOT BE USED WITHOUT WRITTEN PERMISSION

| | |
|---|---|
| DIMENSION UNITS | mm |
| SCALE | NTS |
| GENERAL TOLERANCES (UNLESS SPECIFIED) | |
| ANGULAR TOL ± | 3.0 ° |
| 4 PLACES ± | |
| 3 PLACES ± | |
| 2 PLACES ± | 0.2 |
| 1 PLACE ± | |
| 0 PLACES ± | |
| DRAFT WHERE APPLICABLE MUST REMAIN WITHIN DIMENSIONS | |

CURRENT REV DESC: REMOVED OBSOLETED PART NUMBERS AS PER PCN #515183

EC NO: 826030
DRWN: PRANAA 2025/06/27
CHK'D: GGA 2025/07/01
APPR: GGA 2025/07/01

INITIAL REVISION:
DRWN: SCHEONG 2016/01/15
APPR: KHLIM 2016/11/24

THIRD ANGLE PROJECTION | DRAWING: A3-SIZE | SERIES: 200989

molex

1.27MM PITCH SLIM-GRID
VERTICAL SMT SHROUDED HEADER

PRODUCT CUSTOMER DRAWING

| DOCUMENT NUMBER | DOC TYPE | DOC PART | REVISION |
|---|---|---|---|
| 2009890024 | PSD | 000 | A6 |

| MATERIAL NUMBER | CUSTOMER | SHEET NUMBER |
|---|---|---|
| SEE TABLE | GENERAL MARKET | 2 OF 3 |

| DOCUMENT STATUS | P1 | RELEASE DATE | 2025/07/01 07:04:05 |
|---|---|---|---|

FORMAT: master-lb-prod-A3
REVISION: J1
DATE: 2021/05/01

BOARD TO BOARD (BTB) DISTANCE

| HEADER | MATES WITH (RECEPTACLE) | BTB DIST. | PICTORIAL VIEW |
|---|---|---|---|
| 200989 | 78120 | 7.86 | 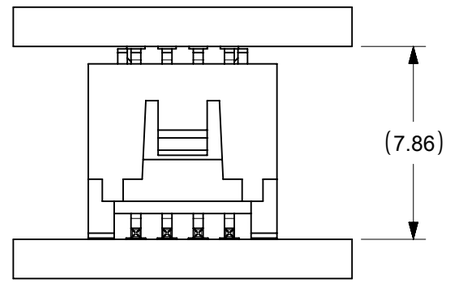 |



THIS DRAWING CONTAINS INFORMATION THAT IS PROPRIETARY TO MOLEX ELECTRONIC TECHNOLOGIES, LLC AND SHOULD NOT BE USED WITHOUT WRITTEN PERMISSION

| DIMENSION UNITS | SCALE |
|---|---|
| mm | NTS |

GENERAL TOLERANCES (UNLESS SPECIFIED)

| | |
|---|---|
| ANGULAR TOL | ± 3.0 ° |
| 4 PLACES | ± |
| 3 PLACES | ± |
| 2 PLACES | ± 0.2 |
| 1 PLACE | ± |
| 0 PLACES | ± |

DRAFT WHERE APPLICABLE MUST REMAIN WITHIN DIMENSIONS

CURRENT REV DESC: REMOVED OBSOLETED PART NUMBERS AS PER PCN #515183

EC NO: 826030
DRWN: PRANAA 2025/06/27
CHK'D: GGA 2025/07/01
APPR: GGA 2025/07/01

INITIAL REVISION:
DRWN: SCHEONG 2016/01/15
APPR: KHLIM 2016/11/24

molex

1.27MM PITCH SLIM-GRID
VERTICAL SMT SHROUDED HEADER

PRODUCT CUSTOMER DRAWING

| DOCUMENT NUMBER | DOC TYPE | DOC PART | REVISION |
|---|---|---|---|
| 2009890024 | PSD | 000 | A6 |

| THIRD ANGLE PROJECTION | DRAWING | SERIES | MATERIAL NUMBER | CUSTOMER | SHEET NUMBER |
|---|---|---|---|---|---|
| | A3-SIZE | 200989 | SEE TABLE | GENERAL MARKET | 3 OF 3 |

| DOCUMENT STATUS | P1 | RELEASE DATE | 2025/07/01 07:04:05 |
|---|---|---|---|

FORMAT: master-tb-prod-A3
REVISION: J1
DATE: 2021/05/01