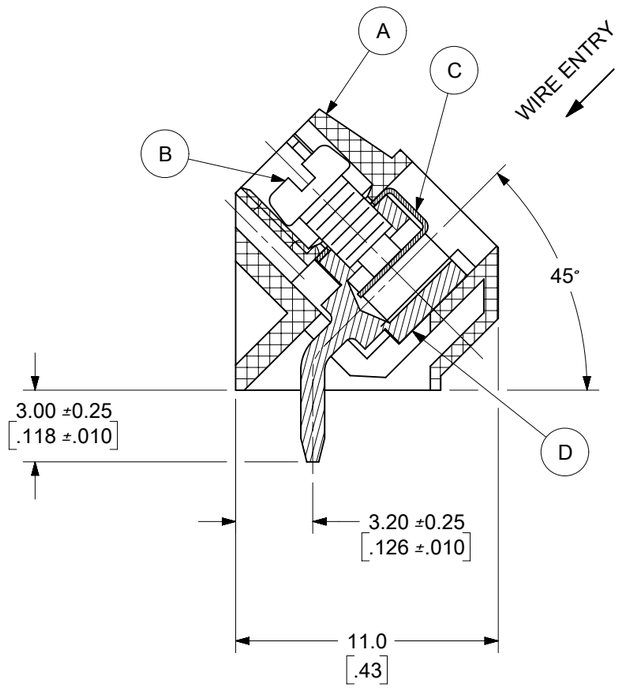

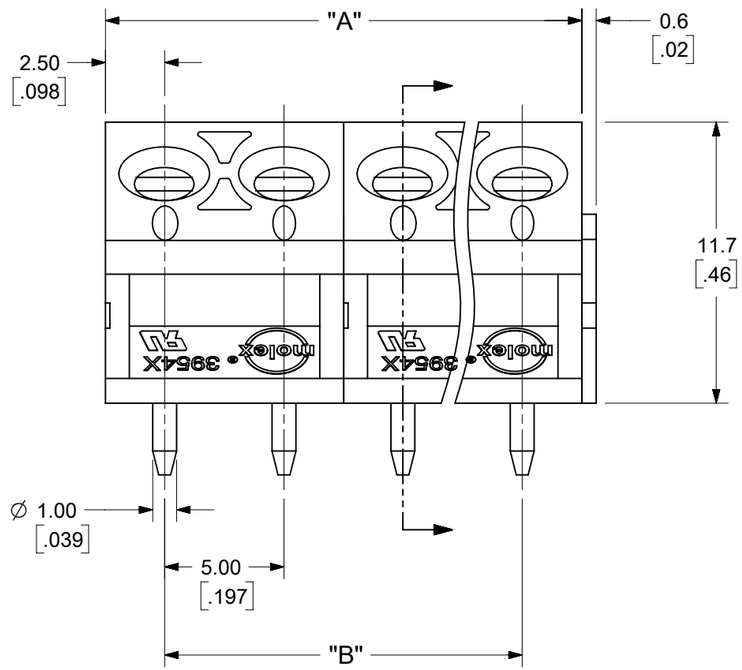

SPECIFICATIONS

1. MATERIAL:
   (A). BODY: NYLON (PA66), UL94 V-0, COLOR: SEE SHEET-2
   (B). SCREW: STEEL, M2.5, ZINC PLATED
   (C). CONTACT: BRASS, NICKEL PLATED
   (D). TERMINAL BLOCK: BRASS, TIN PLATED
2. WIRE RATING: 24-14 AWG
3. ELECTRICAL RATING: 300V, 15A
4. POWER-FREQUENCY WITHSTAND: AC 2500V/1 MIN
5. INSULATION RESISTANCE: DC500V 500MΩ OR ABOVE
6. RATED IMPULSE VOLTAGE: 4000V/MINUS AND PLUS 5 TIMES EACH
7. WIRE STRIP LENGTH: 7.0mm [.28inch]
8. SCREW TORQUE (MAX): 0.34 N.m (3.0 lbf.in)
9. OPERATING TEMPERATURE: -40°C TO +105°C
10. NUMBER OF CIRCUITS: 2 TO 24, SEE SHEET-2

TOLERANCES			
MM	TOL	INCH	TOL
0-6	±0.25	0-.24	±.010
>6-30	±0.40	.24-1.18	±.016
>30-120	±0.50	1.18-4.76	±.020
>120	±0.80	>4.76	±.031

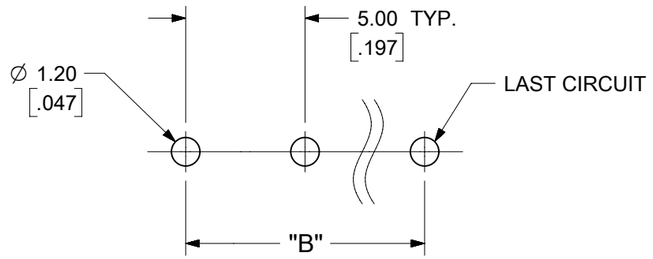

PCB LAYOUT

FUNCTIONAL SYMBOLS
E A = 0
E C = 0
E F = 0
DIVISIONAL SYMBOLS

DIMENSION UNITS: MM/INCH
SCALE: 4:1

GENERAL TOLERANCES (UNLESS SPECIFIED)

	MM	INCH
4 PLACES	± ---	± ---
3 PLACES	± ---	± SEE CHART
2 PLACES	± SEE CHART	± SEE CHART
1 PLACE	± SEE CHART	± ---
0 PLACES	± ---	± ---
ANGULAR TOL		± ---

DRAFT WHERE APPLICABLE MUST REMAIN WITHIN DIMENSIONS

THIS DRAWING CONTAINS INFORMATION THAT IS PROPRIETARY TO MOLEX ELECTRONIC TECHNOLOGIES, LLC AND SHOULD NOT BE USED WITHOUT WRITTEN PERMISSION

CURRENT REV DESC: MIGRATED TO ECTR/NX

EC NO: 637366
DRWN: ABENJAMINLW 2020/03/12
CHK'D: DACHAMMER 2020/05/18
APPR: JFMURPHY 2020/05/29

INITIAL REVISION:
DRWN: LROTHAUS 2006/01/09
APPR: JPAWLICK 2006/01/10

THIRD ANGLE PROJECTION
DRAWING: B-SIZE
SERIES: 39543

molex

EURO TERMINAL BLOCK
5.00MM (.197) PITCH PC MOUNT, 45 DEGREE

PRODUCT CUSTOMER DRAWING

DOCUMENT NUMBER	DOC TYPE	DOC PART	REVISION
SD-39543-001	PSD	001	B2

MATERIAL NUMBER	CUSTOMER	SHEET NUMBER
SEE SHEET-2	GENERAL MARKET	1 OF 2

DOCUMENT STATUS	P1	RELEASE DATE	2020/05/29 16:35:49

FORMAT: Eng-lega-generic-prod-B
REVISION: E
DATE: 2020/01/14

CIRCUIT SIZE	MATERIAL NUMBERS MOLDED TO LENGTH						MATERIAL NUMBERS (STACKABLE)						DIMENSIONAL INFORMATION			
	BLACK			GREEN			BLACK			GREEN			DIM. "A"		DIM. "B"	
	PRINTING OPTIONS			PRINTING OPTIONS			PRINTING OPTIONS			PRINTING OPTIONS						
	None	10A	11A	None	10A	11A	None	10A	11A	None	10A	11A	mm	inch	mm	inch
2	395430202	395431202	395432202	395930202	395931202	395932202	395430502	395431502	395432502	395930502	395931502	395932502	10.0	0.39	5.00	.197
3	395430203	395431203	395432203	395930203	395931203	395932203	395430503	395431503	395432503	395930503	395931503	395932503	15.0	0.59	10.00	.394
4	395430204	395431204	395432204	395930204	395931204	395932204							20.0	0.79	15.00	.591
5	395430205	395431205	395432205	395930205	395931205	395932205							25.0	0.98	20.00	.787
6	395430206	395431206	395432206	395930206	395931206	395932206							30.0	1.18	25.00	.984
7	395430207	395431207	395432207	395930207	395931207	395932207							35.0	1.38	30.00	1.181
8	395430208	395431208	395432208	395930208	395931208	395932208							40.0	1.57	35.00	1.378
9	395430209	395431209	395432209	395930209	395931209	395932209							45.0	1.77	40.00	1.575
10	395430210	395431210	395432210	395930210	395931210	395932210							50.0	1.97	45.00	1.772
11	395430211	395431211	395432211	395930211	395931211	395932211							55.0	2.17	50.00	1.969
12	395430212	395431212	395432212	395930212	395931212	395932212							60.0	2.36	55.00	2.165
13	395430213	395431213	395432213	395930213	395931213	395932213							65.0	2.56	60.00	2.362
14	395430214	395431214	395432214	395930214	395931214	395932214							70.0	2.76	65.00	2.559
15	395430215	395431215	395432215	395930215	395931215	395932215							75.0	2.95	70.00	2.756
16	395430216	395431216	395432216	395930216	395931216	395932216							80.0	3.15	75.00	2.953
17	395430217	395431217	395432217	395930217	395931217	395932217							85.0	3.35	80.00	3.150
18	395430218	395431218	395432218	395930218	395931218	395932218							90.0	3.54	85.00	3.346
19	395430219	395431219	395432219	395930219	395931219	395932219							95.0	3.74	90.00	3.543
20	395430220	395431220	395432220	395930220	395931220	395932220							100.0	3.94	95.00	3.740
21	395430221	395431221	395432221	395930221	395931221	395932221							105.0	4.13	100.00	3.937
22	395430222	395431222	395432222	395930222	395931222	395932222							110.0	4.33	105.00	4.134
23	395430223	395431223	395432223	395930223	395931223	395932223							115.0	4.53	110.00	4.331
24	395430224	395431224	395432224	395930224	395931224	395932224							120.0	4.72	115.00	4.528

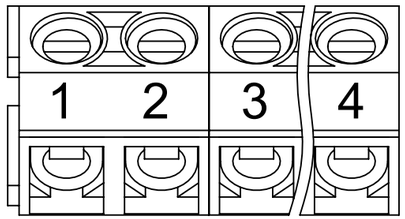

REF. 10A PRINT OPT.

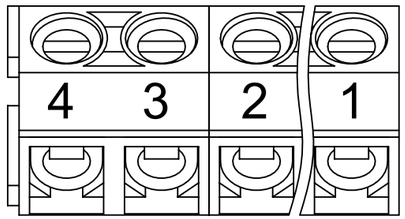

REF. 11A PRINT OPT.

TOLERANCES			
MM	TOL	INCH	TOL
0-6	±0.25	0-.24	±.010
>6-30	±0.40	.24-1.18	±.016
>30-120	±0.50	1.18-4.76	±.020
>120	±0.80	>4.76	±.031

FUNCTIONAL SYMBOLS
FA = 0
FC = 0
FP = 0
DIVISIONAL SYMBOLS

THIS DRAWING CONTAINS INFORMATION THAT IS PROPRIETARY TO MOLEX ELECTRONIC TECHNOLOGIES, LLC AND SHOULD NOT BE USED WITHOUT WRITTEN PERMISSION

DIMENSION UNITS: MM/INCH
SCALE: 3:1

GENERAL TOLERANCES (UNLESS SPECIFIED)

	MM	INCH
4 PLACES	± ---	± ---
3 PLACES	± ---	± SEE CHART
2 PLACES	± SEE CHART	± SEE CHART
1 PLACE	± SEE CHART	± ---
0 PLACES	± ---	± ---
ANGULAR TOL	± ---	

DRAFT WHERE APPLICABLE MUST REMAIN WITHIN DIMENSIONS

CURRENT REV DESC: MIGRATED TO ECTR/NX

EC NO: 637366
DRWN: ABENJAMINLW 2020/03/12
CHK'D: DACHAMMER 2020/05/18
APPR: JFMURPHY 2020/05/29

INITIAL REVISION:
DRWN: LROTHAUS 2006/01/09
APPR: JPAWLICK 2006/01/10

THIRD ANGLE PROJECTION | DRAWING: B-SIZE | SERIES: 39543

molex

EURO TERMINAL BLOCK
5.00MM (.197) PITCH PC MOUNT, 45 DEGREE

PRODUCT CUSTOMER DRAWING

DOCUMENT NUMBER	DOC TYPE	DOC PART	REVISION
SD-39543-001	PSD	001	B2

MATERIAL NUMBER	CUSTOMER	SHEET NUMBER
SEE CHART	GENERAL MARKET	2 OF 2

DOCUMENT STATUS	P1	RELEASE DATE	2020/05/29 16:35:49

FORMAT: Eng-lega-master-tb-prod-B
REVISION: E
DATE: 2020/01/14