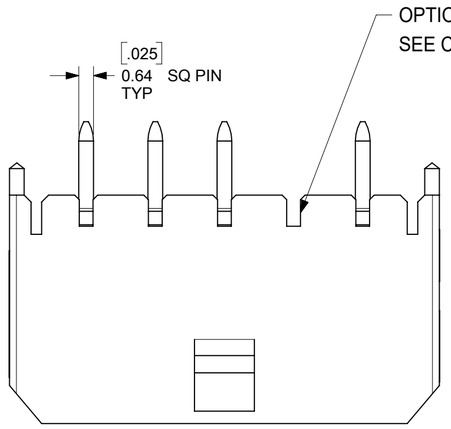

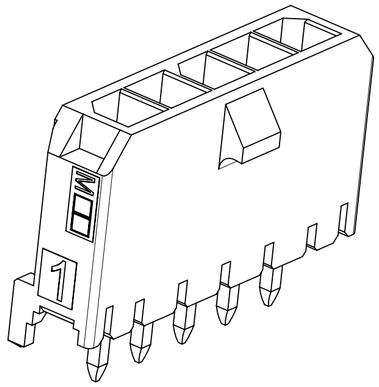

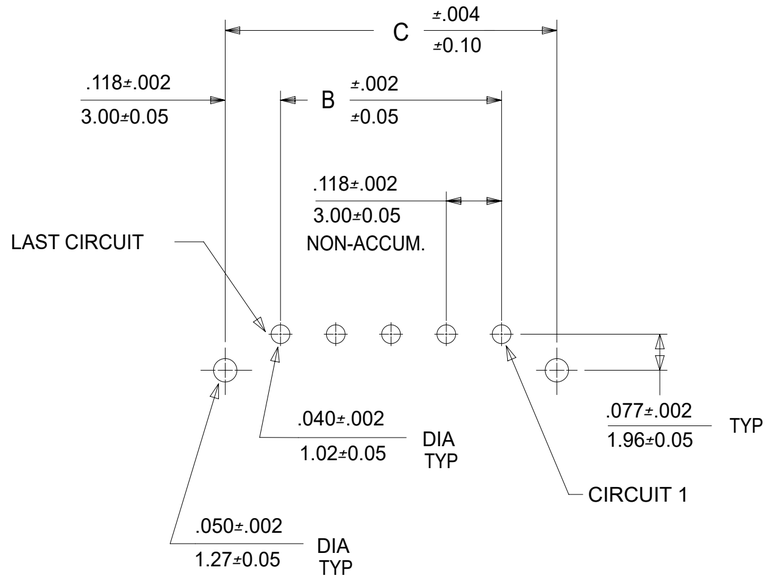

PCB LAYOUT: COMPONENT SIDE
RECOMMENDED PCB THICKNESS: .062/1.57

CKTS	A	B	C
2	.380 9.65	.118 3.00	.354 9.00
3	.498 12.65	.236 6.00	.472 12.00
4	.616 15.65	.354 9.00	.591 15.00
5	.734 18.64	.472 12.00	.709 18.00
6	.852 21.64	.591 15.00	.827 21.00
7	.970 24.64	.709 18.00	.945 24.00
8	1.088 27.64	.827 21.00	1.063 27.00
9	1.206 30.63	.945 24.00	1.181 30.00
10	1.325 33.66	1.063 27.00	1.299 33.00
11	1.443 36.65	1.181 30.00	1.417 36.00
12	1.561 39.65	1.299 33.00	1.535 39.00

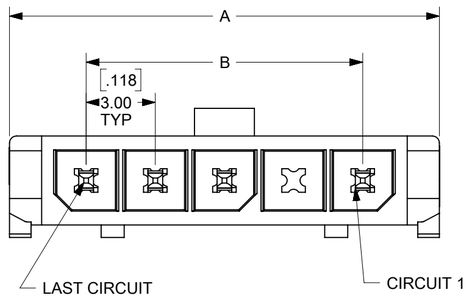

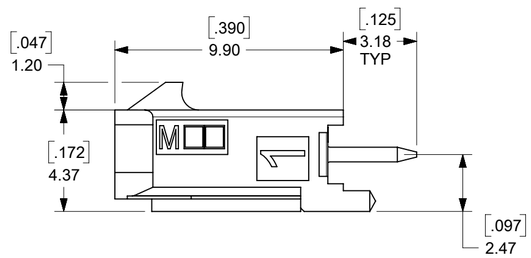

	FINISH A	VOID
CKTS	MATERIAL NO:	CKTS
02	43650-0227	N/A
03	43650-0327	
04	43650-0427	
05	43650-0527	
06	43650-0627	
07	43650-0727	
08	43650-0827	
09	43650-0927	
10	43650-1027	
11	43650-1127	
12	43650-1227	
04	43650-0451	2,3
05	43650-0551	2,3,4
06	N/A	N/A
10	43650-1051	2,3,5,6,8,9
10	N/A	N/A

FINISH B	VOID
MATERIAL NO:	CKTS
43650-0228	N/A
43650-0328	
43650-0428	
43650-0528	
43650-0628	
43650-0728	
43650-0828	
43650-0928	
43650-1028	
43650-1128	
43650-1228	
N/A	N/A
43650-0652	2,3,4,5
N/A	N/A

FINISH C	VOID
MATERIAL NO:	CKTS
43650-0229	N/A
43650-0329	
43650-0429	
43650-0529	
43650-0629	
43650-0729	
43650-0829	
43650-0929	
43650-1029	
43650-1129	
43650-1229	
N/A	N/A
43650-1053	2,4,6,8,9
43650-1054	2,3,5,6,8,9

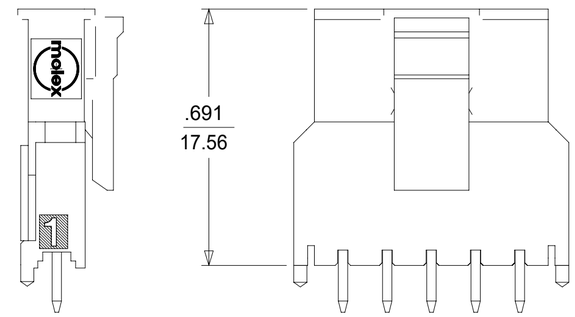

MATED MICRO FIT CONNECTORS

NOTES:

1. HOUSING MATERIAL: LIQUID CRYSTAL POLYMER, GLASS FILLED, UL94V-0, COLOR: BLACK
   TERMINAL MATERIAL: BRASS ALLOY
2. FINISH:
   A = .000060/(0.00152) MIN. REFLOW MATTE TIN OVER .000050/(0.00127) MIN. NICKEL PLATE
   (FINISH IS BRIGHT IN APPEARANCE, THICKNESS AS APPLIED PRIOR TO REFLOW)
   B = .000015/(0.00038) MIN. SELECT GOLD IN CONTACT AREA .000100/(0.00254) MIN. SELECT MATTE TIN ON SOLDER TAILS BOTH OVER .000050/(0.00127) NICKEL OVERALL
   C = .000030/(0.00076) MIN. SELECT GOLD IN CONTACT AREA .000100/(0.00254) MIN. SELECT MATTE TIN ON SOLDER TAILS BOTH OVER .000050/(0.00127) NICKEL OVERALL
3. PRODUCT SPECIFICATION: PS-43650
4. TRAY PACKAGED : SEE MOLEX DRAWING PK-70873-0811
5. MATES WITH MICRO FIT (3.0) RECEPTACLE SERIES 43645
6. PARTS CONFORM TO CLASS 'B' REQUIREMENTS OF COSMETIC SPECIFICATION PS-45499-002.

THIS DRAWING CONTAINS INFORMATION THAT IS PROPRIETARY TO MOLEX ELECTRONIC TECHNOLOGIES, LLC AND SHOULD NOT BE USED WITHOUT WRITTEN PERMISSION

DIMENSION UNITS	SCALE
INCH/MM	NTS

GENERAL TOLERANCES (UNLESS SPECIFIED)

	MM	INCH
4 PLACES	±	±
3 PLACES	±	± 0.01
2 PLACES	± 0.25	±
1 PLACE	± 0.36	±
0 PLACES	±	±
ANGULAR TOL	± 0.5 °	

DRAFT WHERE APPLICABLE MUST REMAIN WITHIN DIMENSIONS

CURRENT REV DESC:

EC NO: 833126
DRWN: ZIXUAQ 2025/09/02
CHK'D: XQZHANG 2025/09/03
APPR: XQZHANG 2025/09/03

INITIAL REVISION:
DRWN: KSAMIEC 2000/11/15
APPR: REDGLEY 2000/11/28

THIRD ANGLE PROJECTION | DRAWING: C-SIZE | SERIES: 43650

molex

MICRO FIT (3.0)
SINGLE ROW / VERTICAL THRU HOLE / PEGS / TRAY

PRODUCT CUSTOMER DRAWING

DOCUMENT NUMBER	DOC TYPE	DOC PART	REVISION
SD-43650-010	PSD	001	E

MATERIAL NUMBER	CUSTOMER	SHEET NUMBER
SEE CHART	GENERAL MARKET	1 OF 1

DOCUMENT STATUS	P1	RELEASE DATE	2025/09/03 02:37:27

FORMAT: Eng-legal-master-tb-prod-C
REVISION: E1
DATE: 2021/05/01