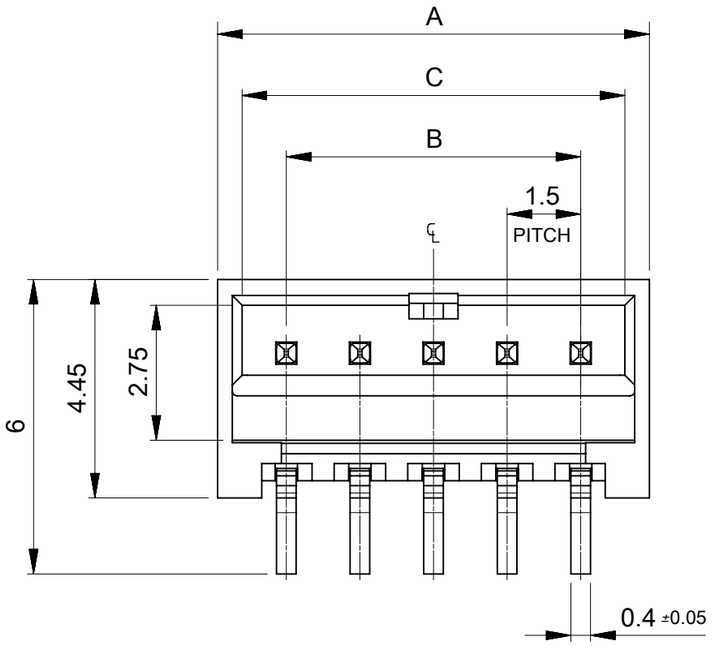

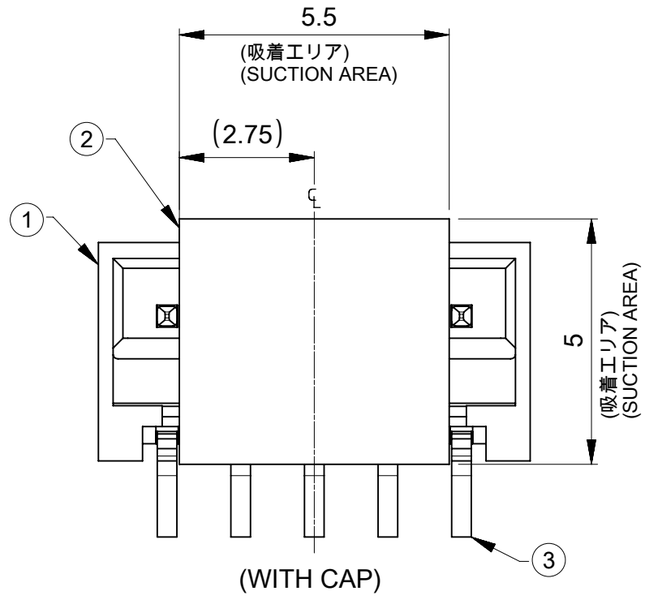

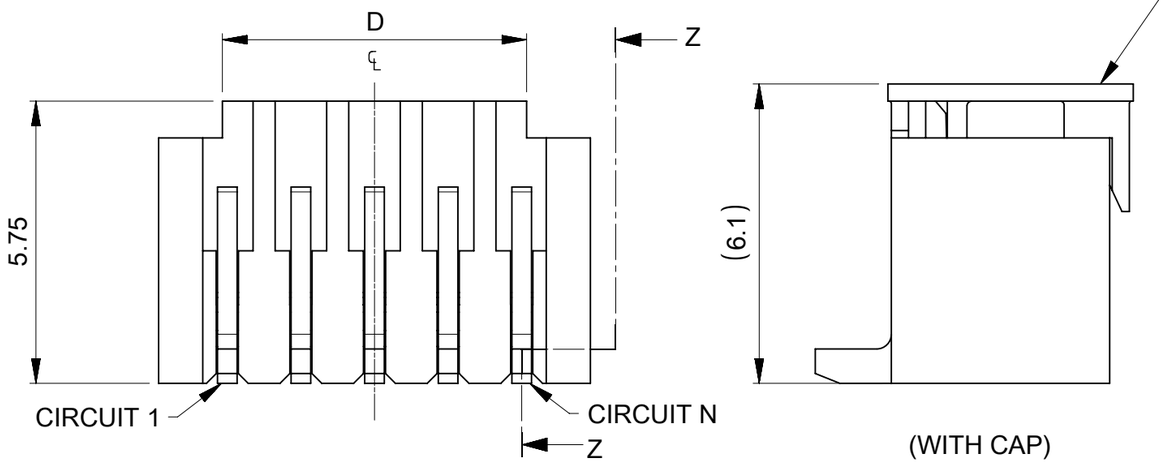

注記

NOTE

1. 材質および仕上げ(めっき仕様)：TABLE1 参照
   MATERIAL AND FINISH: SEE TABLE 1
2. 製品仕様書：PS-87437-001
   PRODUCT SPECIFICATION : PS-87437-001
3. 製品取扱説明書：874370000-AS
   APPLICATION SPECIFICATION : 874370000-AS
4. テール平坦度：0.1以下
   TAIL COPLANARITY TO BE 0.1 MAX.
5. 嵌合相手：87439シリーズ (リセプタクルハウジング), 87421シリーズ (圧着端子)
   MATE WITH 87439 SERIES (RECEPTACLE HOUSING) AND
   87421 SERIES (CRIMP TERMINAL).
6. 本製品は錫めっき品である。金めっき品は202705シリーズを参照。
   THIS PRODUCT IS TIN PLATING.
   FOR GOLD PLATING, REFER TO 202705 SERIES.

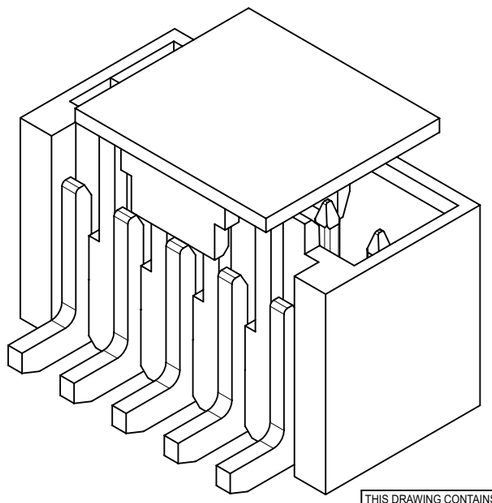

21.2	22.8	21.0	23.8	15
19.7	21.3	19.5	22.3	14
18.2	19.8	18.0	20.8	13
16.7	18.3	16.5	19.3	12
15.2	16.8	15.0	17.8	11
13.7	15.3	13.5	16.3	10
12.2	13.8	12.0	14.8	9
10.7	12.3	10.5	13.3	8
9.2	10.8	9.0	11.8	7
7.7	9.3	7.5	10.3	6
6.2	7.8	6.0	8.8	5
4.7	6.3	4.5	7.3	4
3.2	4.8	3.0	5.8	3
1.7	3.3	1.5	4.3	2
D	C	B	A	極数 CIRCUIT SIZE

△1 TABLE1

番号 No.	部品 PART	材質 MATERIAL	
①	ハウジング HOUSING	ナイロン, UL94-V0, 色：自然色(ベージュ) /黒 NYLON (PA), UL94-V0, COLOR : NATURAL(BEIGE) /BLACK	
②	キャップ CAP	ナイロン, UL94-V0, 色：ベージュ NYLON (PA), UL94-V0, COLOR : BEIGE	
③	ターミナル TERMINAL	材料 MATERIAL	黄銅 BRASS
		下地めっき UNDER PLATING	ニッケルめっき 1.27マイクロメートル以上 NICKEL PLATING 1.27micro-meter MIN
		接点部、テール CONTACT AND TAIL	無光沢錫めっき 2.54マイクロメートル以上 MATTE TIN PLATING 2.54 micro-meter MIN

DOCUMENT STATUS	P1	RELEASE DATE	2025/12/01	13:35:04

THIS DRAWING CONTAINS INFORMATION THAT IS PROPRIETARY TO MOLEX ELECTRONIC TECHNOLOGIES, LLC AND SHOULD NOT BE USED WITHOUT WRITTEN PERMISSION

DIMENSION UNITS	SCALE
mm	NTS

GENERAL TOLERANCES (UNLESS SPECIFIED)

ANGULAR TOL	±	3.0 °
4 PLACES	±	0.2
3 PLACES	±	0.2
2 PLACES	±	0.2
1 PLACE	±	0.2
0 PLACES	±	0.2

DRAFT WHERE APPLICABLE MUST REMAIN WITHIN DIMENSIONS

CURRENT REV DESC: REMOVED OBSOLETED PART NUMBERS AS PER PCN#515988

EC NO: 840974
DRWN: RAGHAH3 2025/11/12
CHK'D: GGA 2025/12/01
APPR: GGA 2025/12/01

INITIAL REVISION:
DRWN: RTANAKA02 2018/11/21
APPR: SAKIYAMA 2019/04/26

THIRD ANGLE PROJECTION | DRAWING: A3-SIZE | SERIES: 87437

molex

PICO-SPOX 1.5 W/B CONN VERTICAL HEADER ASSY (SMT TIN PLATING VERSION)

PRODUCT CUSTOMER DRAWING

DOCUMENT NUMBER	DOC TYPE	DOC PART	REVISION
874370231-SD	PSD	000	B1

MATERIAL NUMBER	CUSTOMER	SHEET NUMBER
SEE SHEET 5	GENERAL	1 OF 5

FORMAT: master-ib-prod-A3
REVISION: J1
DATE: 2021/05/01

推奨基板レイアウト
RECOMMENDED PCB LAYOUT

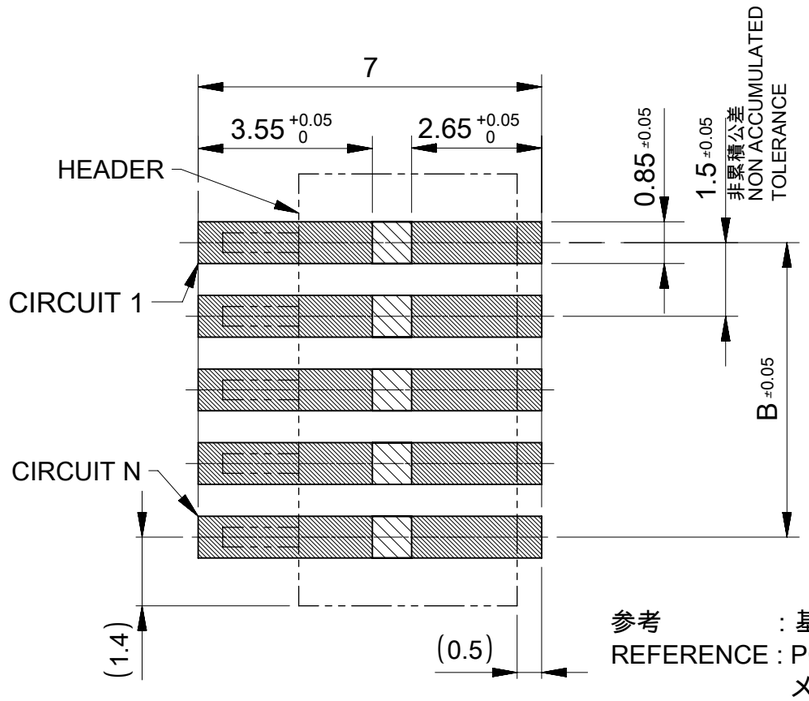

参考　　：基板厚 1.0mm
REFERENCE : PCB THICKNESS 1.0mm
メタルマスク厚 0.12mm
STENCIL THICKNESS 0.12mm
マスク開口率100%
APERTURE RATIO 100%.

: 半田エリア (パターンエリア)
SOLDER AREA (COPPER ZONE)

: 半田禁止エリア (パターン禁止エリア)
SOLDER KEEP OUT AREA (NO-COPPER ZONE)
半田上がりを防ぐため。
TO PREVENT SOLDER LIFTING.
レジストによって分離する場合は、パターン面よりも盛り上がらないこと。
IF APPLY RESIST IN THIS AREA, LEVEL AS PATTERN AREA FACE.

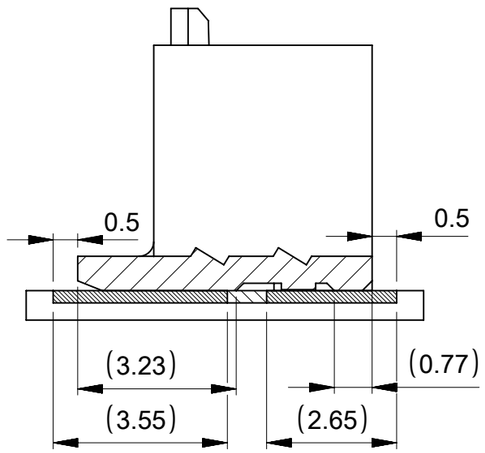

SECTION Z-Z

△5 嵌合図
MATED CONNECTORS

嵌合相手
MATE WITH:
レセプタクルハウジング
RECEPTACLE HOUSING
87439シリーズ
87439 SERIES

ヘッダー
HEADER
87437シリーズ
87437 SERIES

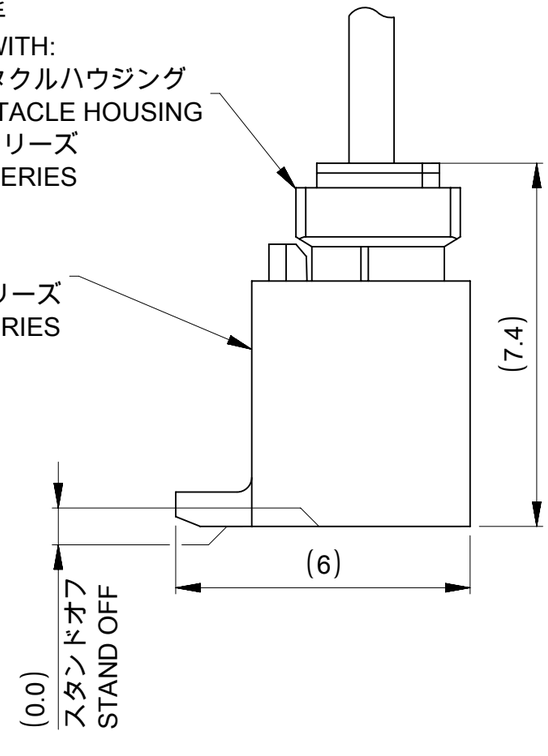

THIS DRAWING CONTAINS INFORMATION THAT IS PROPRIETARY TO MOLEX ELECTRONIC TECHNOLOGIES, LLC AND SHOULD NOT BE USED WITHOUT WRITTEN PERMISSION

DIMENSION UNITS	SCALE
mm	NTS

GENERAL TOLERANCES (UNLESS SPECIFIED)

ANGULAR TOL	±	3.0 °
4 PLACES	±	0.2
3 PLACES	±	0.2
2 PLACES	±	0.2
1 PLACE	±	0.2
0 PLACES	±	0.2

DRAFT WHERE APPLICABLE MUST REMAIN WITHIN DIMENSIONS

CURRENT REV DESC: REMOVED OBSOLETED PART NUMBERS AS PER PCN#515988

EC NO: 840974
DRWN: RAGHAH3 2025/11/12
CHK'D: GGA 2025/12/01
APPR: GGA 2025/12/01

INITIAL REVISION:
DRWN: RTANAKA02 2018/11/21
APPR: SAKIYAMA 2019/04/26

molex

PICO-SPOX 1.5 W/B CONN VERTICAL HEADER ASSY (SMT TIN PLATING VERSION)

PRODUCT CUSTOMER DRAWING

DOCUMENT NUMBER	DOC TYPE	DOC PART	REVISION
874370231-SD	PSD	000	B1

THIRD ANGLE PROJECTION	DRAWING	SERIES	MATERIAL NUMBER	CUSTOMER	SHEET NUMBER
	A3-SIZE	87437	SEE SHEET 5	GENERAL	2 OF 5

DOCUMENT STATUS	P1	RELEASE DATE	2025/12/01 13:35:04

FORMAT: master-lb-prod-A3
REVISION: J1
DATE: 2021/05/01

エンボス梱包　詳細 (キャップ付き)
EMBOSSED CARRIER TAPE PACKING DETAILS (WITH CAP)

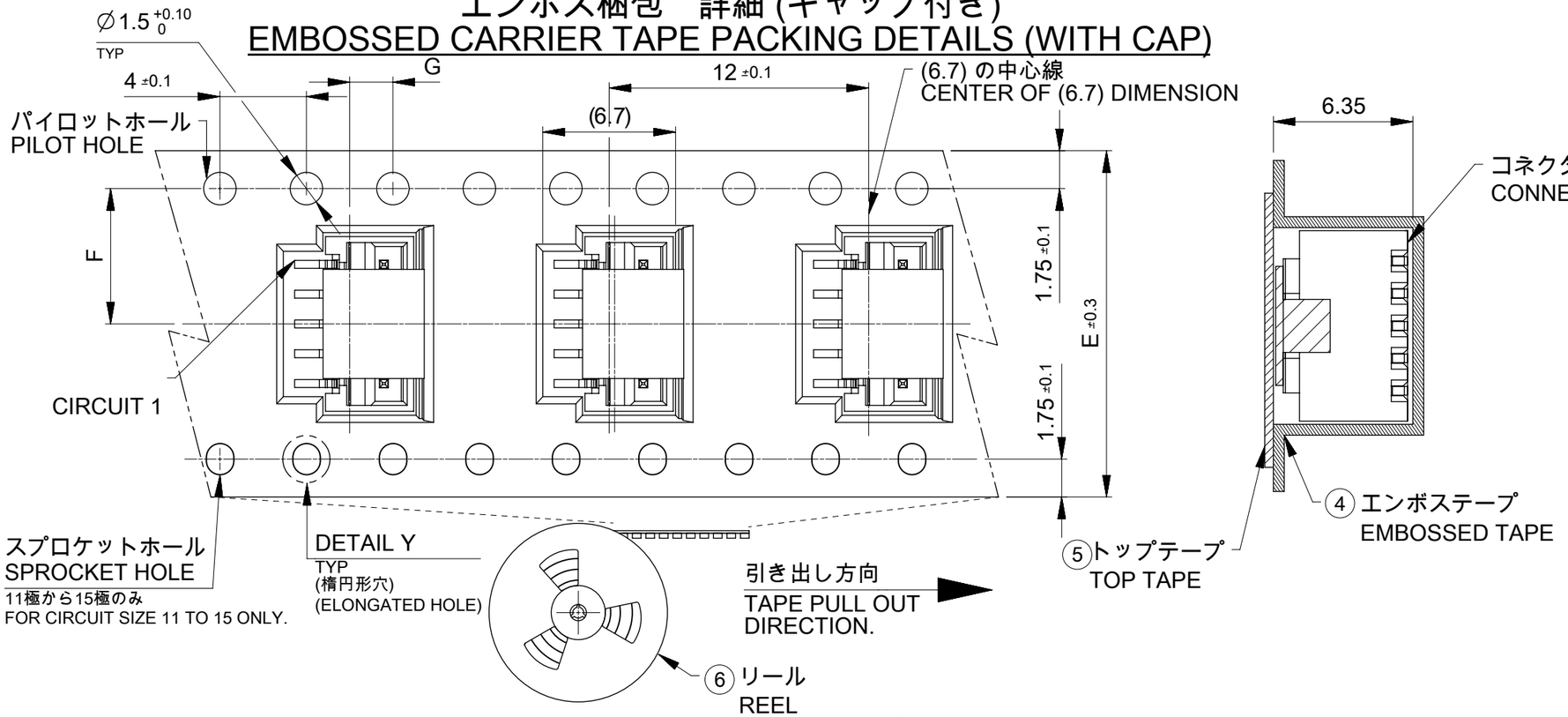

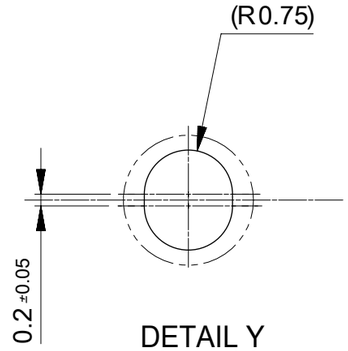

DETAIL Y
(楕円形穴)
(ELONGATED HOLE)

番号 NO.	部品 PART	材質 MATERIAL
④	エンボステープ EMBOSSED TAPE	ポリスチレン POLYSTYRENE (PS)
⑤	トップテープ TOP TAPE	ポリエチレン POLYETHYLENE (PE)
⑥	リール REEL	ポリスチレン POLYSTYRENE (PS)

エンボス梱包　詳細 (キャップなし)
EMBOSSED CARRIER TAPE PACKING DETAILS (WITHOUT CAP)

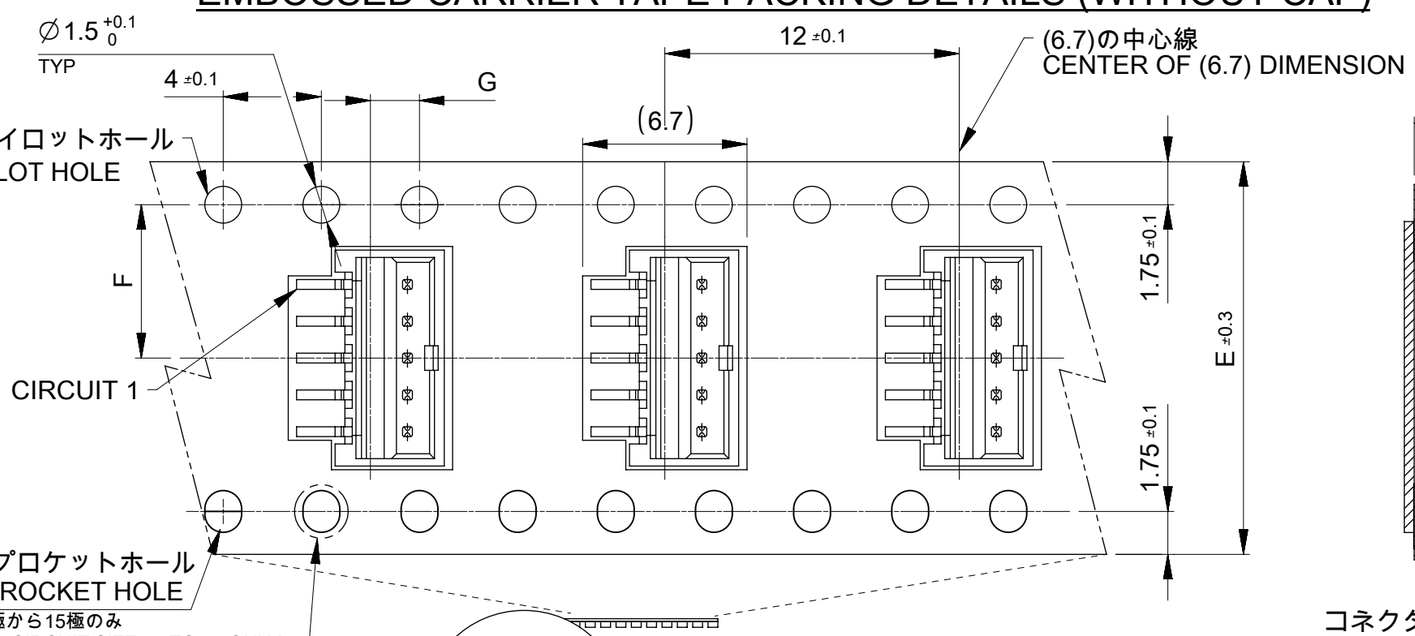

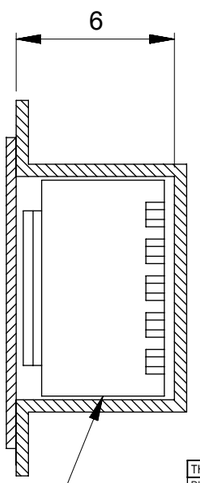

G	F	E	極数 CIRCUIT SIZE
2±0.15	20.2±0.15	44	15
2±0.1	14.2±0.1	32	14
			13
			12
			11
	11.5±0.1	24	10
			9
			8
			7
	7.5±0.1	16	6
			5
			4
			3
			2

THIS DRAWING CONTAINS INFORMATION THAT IS PROPRIETARY TO MOLEX ELECTRONIC TECHNOLOGIES, LLC AND SHOULD NOT BE USED WITHOUT WRITTEN PERMISSION

DIMENSION UNITS	SCALE
mm	NTS

GENERAL TOLERANCES (UNLESS SPECIFIED)

ANGULAR TOL	±	3.0 °
4 PLACES	±	0.2
3 PLACES	±	0.2
2 PLACES	±	0.2
1 PLACE	±	0.2
0 PLACES	±	0.2

DRAFT WHERE APPLICABLE MUST REMAIN WITHIN DIMENSIONS

CURRENT REV DESC: REMOVED OBSOLETED PART NUMBERS AS PER PCN#515988

EC NO: 840974
DRWN: RAGHAH3 2025/11/12
CHK'D: GGA 2025/12/01
APPR: GGA 2025/12/01

INITIAL REVISION:
DRWN: RTANAKA02 2018/11/21
APPR: SAKIYAMA 2019/04/26

THIRD ANGLE PROJECTION | DRAWING: A3-SIZE | SERIES: 87437

molex

PICO-SPOX 1.5 W/B CONN VERTICAL HEADER ASSY (SMT TIN PLATING VERSION)

PRODUCT CUSTOMER DRAWING

DOCUMENT NUMBER	DOC TYPE	DOC PART	REVISION
874370231-SD	PSD	000	B1

MATERIAL NUMBER	CUSTOMER	SHEET NUMBER
SEE SHEET 5	GENERAL	3 OF 5

DOCUMENT STATUS	P1	RELEASE DATE	2025/12/01 13:35:04

FORMAT: master-ib-prod-A3
REVISION: J1
DATE: 2021/05/01

リール　詳細
REEL DETAILS



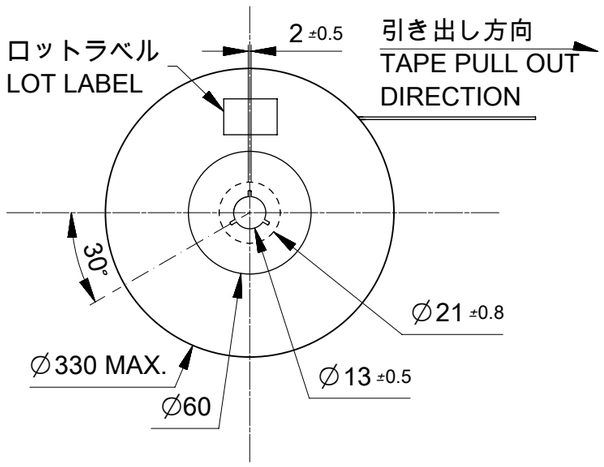

注記
NOTE

7．リーダー部および末端部テープ長さ
LEADER AND TRAILER TAPE LENGTH

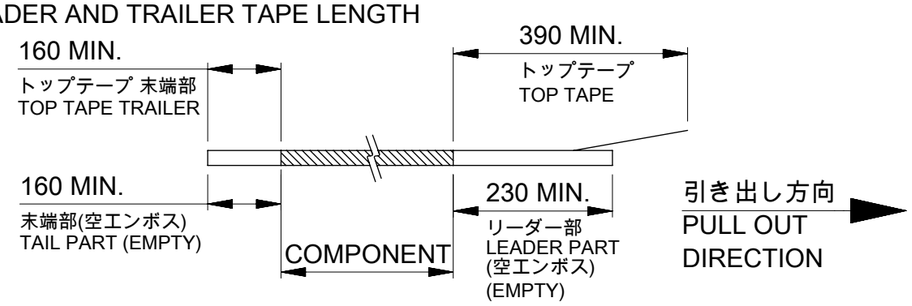

8．トップテープの剥離強度：IEC60286-3に準拠。
PEELING OFF FORCE OF THE TOP TAPE: DEFINED IEC60286-3.
(剥離方向は下図を参照)
(PEELING DIRECTION AS SHOWN IN FOLLOWING FIGURE)

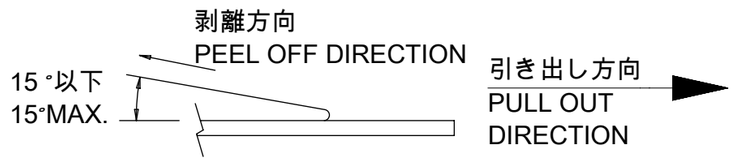

9．EIA-481に準拠する。
PACKAGING STANDARD IS AS PER EIA-481.

10．梱包数量
TAPE & REEL QUANTITY
キャップ付き：900個/リール
WITH CAP : 900PCS/REEL
キャップなし：1000個/リール
WITHOUT CAP : 1000PCS/REEL

11．本製品は乾燥剤入りハイバリア梱包での納品となる。
THIS PRODUCT IS DELIVERED IN A HIGH BARRIER PACKAGE WITH DESICCANT.

12．梱包仕様書：SPK-87437-001
PACKING INFORMATION : SPK-87437-001

J	H MAX	極数 CIRCUIT SIZE
44.4	50.4	15
32.4	38.4	14
		13
		12
		11
24.4	30.4	10
		9
		8
		7
16.4	22.4	6
		5
		4
		3
		2

THIS DRAWING CONTAINS INFORMATION THAT IS PROPRIETARY TO MOLEX ELECTRONIC TECHNOLOGIES, LLC AND SHOULD NOT BE USED WITHOUT WRITTEN PERMISSION

DIMENSION UNITS	SCALE
mm	NTS

GENERAL TOLERANCES (UNLESS SPECIFIED)

ANGULAR TOL	±	3.0 °
4 PLACES	±	0.2
3 PLACES	±	0.2
2 PLACES	±	0.2
1 PLACE	±	0.2
0 PLACES	±	0.2

DRAFT WHERE APPLICABLE MUST REMAIN WITHIN DIMENSIONS

CURRENT REV DESC: REMOVED OBSOLETED PART NUMBERS AS PER PCN#515988

EC NO: 840974
DRWN: RAGHAH3 2025/11/12
CHK'D: GGA 2025/12/01
APPR: GGA 2025/12/01

INITIAL REVISION:
DRWN: RTANAKA02 2018/11/21
APPR: SAKIYAMA 2019/04/26

molex

PICO-SPOX 1.5 W/B CONN VERTICAL HEADER ASSY (SMT TIN PLATING VERSION)

PRODUCT CUSTOMER DRAWING

DOCUMENT NUMBER	DOC TYPE	DOC PART	REVISION
874370231-SD	PSD	000	B1

THIRD ANGLE PROJECTION | DRAWING: A3-SIZE | SERIES: 87437 | MATERIAL NUMBER: SEE SHEET 5 | CUSTOMER: GENERAL | SHEET NUMBER: 4 OF 5

DOCUMENT STATUS	P1	RELEASE DATE	2025/12/01 13:35:04

FORMAT: master-lb-prod-A3
REVISION: J1
DATE: 2021/05/01

発注番号
ORDER NUMBER

87437 * * _ * _ 3

極数 CIRCUIT SIZE
02 から 15 02 TO 15

ハウジングカラー, キャップオプション HOUSING COLOR AND CAP OPTION
4: ハウジングカラー：ベージュ, キャップ無 BEIGE COLOR HOUSING WITHOUT CAP
5: ハウジングカラー：黒, キャップ無 BLACK COLOR HOUSING WITHOUT CAP
6: ハウジングカラー：黒, キャップ有 BLACK COLOR HOUSING WITH CAP
7: ハウジングカラー：ベージュ, キャップ有 BEIGE COLOR HOUSING WITH CAP

有 WITH		無 WITHOUT	キャップ CAP
黒 BLACK	ベージュ BEIGE	ベージュ BEIGE	ハウジングカラー HOUSING COLOR
874371563	874371573	874371543	15
874371463	874371473	874371443	14
874371363	874371373	874371343	13
874371263	874371273	874371243	12
874371163	874371173	874371143	11
874371063	874371073	874371043	10
874370963	874370973	874370943	9
874370863	874370873	874370843	8
874370763	874370773	874370743	7
874370663	874370673	874370643	6
874370563	874370573	874370543	5
874370463	874370473	874370443	4
874370363	874370373	874370343	3
874370263	874370273	874370243	2
発注番号 ORDER NUMBER			極数 CIRCUIT SIZE
梱包形態：エンボステープ梱包 PACKAGING STYLE : EMBOSSED TAPE AND REEL			

THIS DRAWING CONTAINS INFORMATION THAT IS PROPRIETARY TO MOLEX ELECTRONIC TECHNOLOGIES, LLC AND SHOULD NOT BE USED WITHOUT WRITTEN PERMISSION

DIMENSION UNITS	SCALE
mm	NTS

GENERAL TOLERANCES (UNLESS SPECIFIED)

ANGULAR TOL	±	3.0 °
4 PLACES	±	0.2
3 PLACES	±	0.2
2 PLACES	±	0.2
1 PLACE	±	0.2
0 PLACES	±	0.2

DRAFT WHERE APPLICABLE MUST REMAIN WITHIN DIMENSIONS

CURRENT REV DESC: REMOVED OBSOLETED PART NUMBERS AS PER PCN#515988

EC NO: 840974
DRWN: RAGHAH3 2025/11/12
CHK'D: GGA 2025/12/01
APPR: GGA 2025/12/01

INITIAL REVISION:
DRWN: RTANAKA02 2018/11/21
APPR: SAKIYAMA 2019/04/26

molex

PICO-SPOX 1.5 W/B CONN VERTICAL HEADER ASSY (SMT TIN PLATING VERSION)

PRODUCT CUSTOMER DRAWING

DOCUMENT NUMBER	DOC TYPE	DOC PART	REVISION
874370231-SD	PSD	000	B1

THIRD ANGLE PROJECTION	DRAWING	SERIES	MATERIAL NUMBER	CUSTOMER	SHEET NUMBER
	A3-SIZE	87437	SEE CHART	GENERAL	5 OF 5

DOCUMENT STATUS	P1	RELEASE DATE	2025/12/01 13:35:04

FORMAT: master-tb-prod-A3
REVISION: J1
DATE: 2021/05/01