

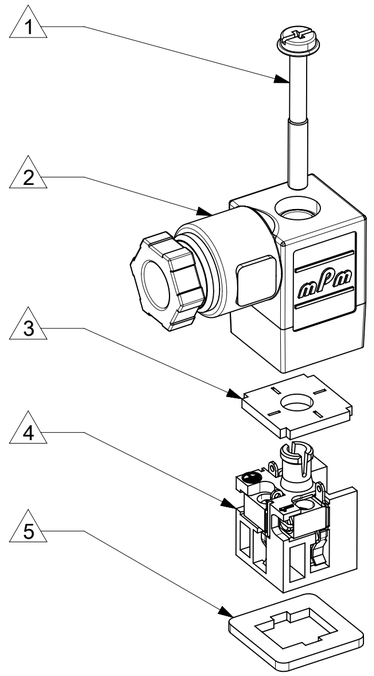

ITEM	DESCRIPTION
1	SCREW
2	COVER ASSEMBLY
3	PCB
4	INSERT ASSEMBLY
5	GASKET

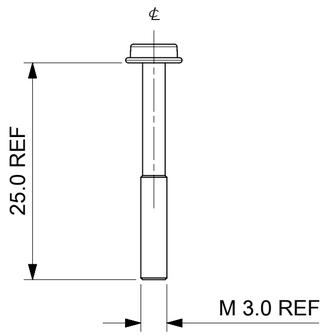

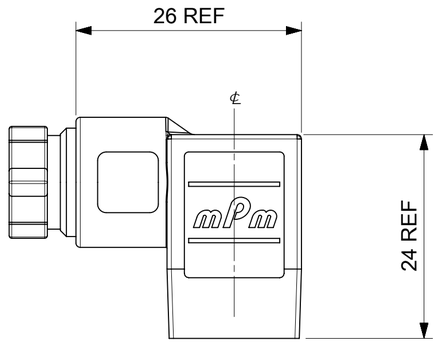

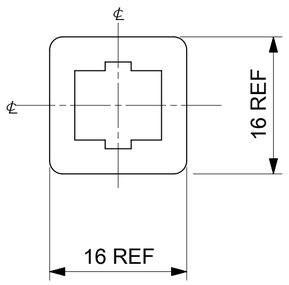

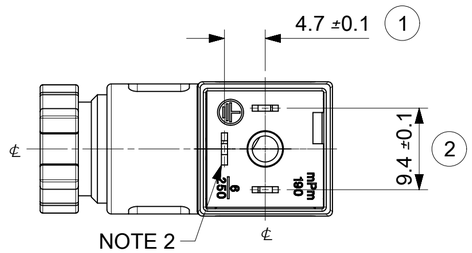

S19207TA022**

SERIES
S19= INTERNAL THREAD FORM C MICRO
POLES
2= 2 POLE & 3= 3 POLE
THREAD
07= PG7, M2= M12x1.5
MATERIAL AND HOUSING COLOUR
G= PA6 GRAY, N= PA6 BLACK, W= PA6 BLACK V0,
T= PA12 TRANSPARENT, B= PA6 WHITE
CIRCUIT
SEE DETAILS IN CATALOGUE
VOLTAGE
SEE DETAILS IN CATALOGUE
SCREW AND GASKET
1= NBR PROFILE GASKET & SCREW
2= NBR FLAT GASKET & SCREW
3= WHITE SILICON PROFILE GASKET & SCREW
4= WHITE SILICON FLAT GASKET & SCREW
A= NBR PROFILE GASKET & SCREW +2mm
B= NBR FLAT GASKET & SCREW +2mm
NON STANDARD COMPONENTS
14= PACKED IN NEUTRAL BAG
5N= PACKED IN BOXES OF 200

NOTES
1. PLEASE SEE SHEET 2 FOR CURRENTLY CONFIGURED PART NUMBERS. FOR SPECIFIC PART NUMBERS PLEASE CONTACT SALES OR CONSULT THE INTELLIGENT PART NUMBERS IN THE TABLE ATTACHED.
2. EARTH POSITION SHOWN, H6.
3. FOR PACKAGING SEE PACKAGING SPEC PK 121065-S19
4. PRODUCT SPEC: SEE PS-121201-001

LAST INSPECTION NUMBER 2

DOCUMENT STATUS	P1	RELEASE DATE	2024/12/16 13:41:11

FORMAT: master-tb-prod-A2
REVISION: J1
DATE: 2021/05/01

FUNCTIONAL SYMBOLS
FA = 0
FC = 0
FP = 0
DIVISIONAL SYMBOLS

DIMENSION UNITS: mm
SCALE: 2:1

GENERAL TOLERANCES (UNLESS SPECIFIED)

ANGULAR TOL	±	2.0 °
4 PLACES	±	
3 PLACES	±	
2 PLACES	±	0.1
1 PLACE	±	0.2
0 PLACES	±	

DRAFT WHERE APPLICABLE MUST REMAIN WITHIN DIMENSIONS

THIS DRAWING CONTAINS INFORMATION THAT IS PROPRIETARY TO MOLEX ELECTRONIC TECHNOLOGIES, LLC AND SHOULD NOT BE USED WITHOUT WRITTEN PERMISSION

CURRENT REV DESC: REMOVED OBSOLETED PART NUMBERS AS PER PCN#515767

EC NO: 806185
DRWN: VISHAH2 2024/11/25
CHK'D: GGA 2024/12/16
APPR: GGA 2024/12/16

INITIAL REVISION:
DRWN: JOCONNOR 2011/05/18
APPR: EFOLAN 2011/06/07

THIRD ANGLE PROJECTION
DRAWING: A2-SIZE
SERIES: 121064

molex

S19 SERIES
INTERNAL THREAD

PRODUCT CUSTOMER DRAWING

DOCUMENT NUMBER	DOC TYPE	DOC PART	REVISION
SD-121064-003	PSD	001	E1

MATERIAL NUMBER	CUSTOMER	SHEET NUMBER
SEE SHEET 2	GENERAL MARKET	1 OF 2

PART No.	mPm PART No.	DESCRIPTION	CIRCUIT	VOLTAGE	COLOUR
1210640794	S19207NE052	TYPE C MICRO 2P PG7 BLACK NBR FLAT GASKET	E0	230V	DIODE
1210640804	S19207TA052	TYPE C MICRO 2P PG7 TRANSPARENT NBR FLAT GASKET	A0	230V	RED LED/LAMP
1210640807	S19207TA11A	TYPE C MICRO 2P PG7 TRANSPARENT NBR PROFILE GASKET & SCREW +2mm	A1	12V	RED LED/LAMP
1210640808	S19207TA121	TYPE C MICRO 2P PG7 TRANSPARENT NBR PROFILE GASKET	A1	24V	RED LED/LAMP
1210640809	S19207TA122	TYPE C MICRO 2P PG7 TRANSPARENT NBR FLAT GASKET	A1	24V	RED LED/LAMP
1210640812	S19207TA12A	TYPE C MICRO 2P PG7 TRANSPARENT NBR PROFILE GASKET & SCREW +2mm	A1	24V	RED LED/LAMP
1210640818	S19207TA142	TYPE C MICRO 2P PG7 TRANSPARENT NBR FLAT GASKET	A1	115V	RED LED/LAMP
1210640820	S19207TA14A	TYPE C MICRO 2P PG7 TRANSPARENT NBR PROFILE GASKET & SCREW +2mm	A1	115V	RED LED/LAMP
1210640825	S19207TA1B2	TYPE C MICRO 2P PG7 TRANSPARENT NBR FLAT GASKET	A1	24V	GREEN LED
1210640828	S19207TC022	TYPE C MICRO 2P PG7 TRANSPARENT NBR FLAT GASKET	C0	24V	RED LED/LAMP
1210640834	S19207TC122	TYPE C MICRO 2P PG7 TRANSPARENT NBR FLAT GASKET	C1	24V	RED LED/LAMP
1210640838	S19207TC321	TYPE C MICRO 2P PG7 TRANSPARENT NBR PROFILE GASKET	C3	24V	RED LED/LAMP
1210640839	S19207TC322	TYPE C MICRO 2P PG7 TRANSPARENT NBR FLAT GASKET	C3	24V	RED LED/LAMP
1210640846	S19207TC3H1	TYPE C MICRO 2P PG7 TRANSPARENT NBR PROFILE GASKET	C3	24V	AMBER LED
1210640847	S19207TC3H2	TYPE C MICRO 2P PG7 TRANSPARENT NBR FLAT GASKET	C3	24V	AMBER LED
1210640851	S19207TC412	TYPE C MICRO 2P PG7 TRANSPARENT NBR FLAT GASKET	C4	12V	RED LED/LAMP
1210640852	S19207TC421	TYPE C MICRO 2P PG7 TRANSPARENT NBR PROFILE GASKET	C4	24V	RED LED/LAMP
1210640853	S19207TC422	TYPE C MICRO 2P PG7 TRANSPARENT NBR FLAT GASKET	C4	24V	RED LED/LAMP
1210640854	S19207TC42A	TYPE C MICRO 2P PG7 TRANSPARENT NBR PROFILE GASKET & SCREW +2mm	C4	24V	RED LED/LAMP
1210640857	S19207TC441	TYPE C MICRO 2P PG7 TRANSPARENT NBR PROFILE GASKET	C4	115V	RED LED/LAMP
1210640858	S19207TC442	TYPE C MICRO 2P PG7 TRANSPARENT NBR FLAT GASKET	C4	115V	RED LED/LAMP
1210640863	S19207TC4B2	TYPE C MICRO 2P PG7 TRANSPARENT NBR FLAT GASKET	C4	24V	GREEN LED
1210640867	S19207TC4D2	TYPE C MICRO 2P PG7 TRANSPARENT NBR FLAT GASKET	C4	115V	GREEN LED
1210640869	S19207TC4E2	TYPE C MICRO 2P PG7 TRANSPARENT NBR FLAT GASKET	C4	230V	GREEN LED
1210640871	S19207TC4H1	TYPE C MICRO 2P PG7 TRANSPARENT NBR PROFILE GASKET	C4	24V	AMBER LED
1210640872	S19207TC4H2	TYPE C MICRO 2P PG7 TRANSPARENT NBR FLAT GASKET	C4	24V	AMBER LED
1210641256	S19207TA021	TYPE C MICRO 2P PG7 TRANSPARENT NBR PROFILE GASKET	A0	24V	RED LED/LAMP
1210641294	S19207TC4B1	TYPE C MICRO 2P PG7 TRANSPARENT NBR PROFILE GASKET	C4	24V	GREEN LED
1210641445	S19207TA051	TYPE C MICRO 2P PG7 TRANSPARENT NBR PROFILE GASKET	A0	230V	RED LED/LAMP
1210641465	S19207TC323	TYPE C MICRO 2P PG7 TRANSPARENT WHITE SILICON PROFILE GASKET	C3	24V	RED LED/LAMP
1210641541	S192M2TC4H1	TYPE C MICRO 2P M12x1.5 TRANSPARENT NBR PROFILE GASKET	C4	24V	AMBER LED
1210641559	S19207NE051	TYPE C MICRO 2P PG7 BLACK NBR PROFILE GASKET	E0	230V	DIODE
1210641718	S19207TC4L1	TYPE C MICRO 2P PG7 TRANSPARENT NBR PROFILE GASKET	C4	115V	AMBER LED
1210641727	S19207TC4L2	TYPE C MICRO 2P PG7 TRANSPARENT NBR FLAT GASKET	C4	115V	AMBER LED
1210641728	S19207TA1H1	TYPE C MICRO 2P PG7 TRANSPARENT NBR PROFILE GASKET	A1	24V	AMBER LED
1210641729	S19207TA1L1	TYPE C MICRO 2P PG7 TRANSPARENT NBR PROFILE GASKET	A1	115V	AMBER LED
1210650511	S19207TC42214	TYPE C MICRO 2P PG7 TRANSPARENT NBR FLAT GASKET IN NEUTRAL BAG	C4	24V	RED LED/LAMP
1210641766	S19207TA1D1	TYPE C MICRO 2P PG7 TRANSPARENT NBR PROFILE GASKET	A1	115V	GREEN LED
1210641797	S19207NE051P7	TYPE C MICRO 2P PG7 BLACK NBR PROFILE GASKET, IP67 COMPLIANT	E0	230V	DIODE
1210641342	S19207TC4M1	TYPE C MICRO 2P PG7 TRANSPARENT NBR PROFILE GASKET	C4	230V	AMBER LED

THIS DRAWING CONTAINS INFORMATION THAT IS PROPRIETARY TO MOLEX ELECTRONIC TECHNOLOGIES, LLC AND SHOULD NOT BE USED WITHOUT WRITTEN PERMISSION

FUNCTIONAL SYMBOLS
EA = 0
EC = 0
ED = 0
DIVISIONAL SYMBOLS

DIMENSION UNITS: mm
SCALE: 2:1

GENERAL TOLERANCES (UNLESS SPECIFIED)

ANGULAR TOL	± 2.0 °
4 PLACES	±
3 PLACES	±
2 PLACES	± 0.1
1 PLACE	± 0.2
0 PLACES	±

DRAFT WHERE APPLICABLE MUST REMAIN WITHIN DIMENSIONS

CURRENT REV DESC: REMOVED OBSOLETED PART NUMBERS AS PER PCN#515767

EC NO: 806185
DRWN: VISHAH2 2024/11/25
CHK'D: GGA 2024/12/16
APPR: GGA 2024/12/16

INITIAL REVISION:
DRWN: JOCONNOR 2011/05/18
APPR: EFOLAN 2011/06/07

molex

S19 SERIES
INTERNAL THREAD

PRODUCT CUSTOMER DRAWING

DOCUMENT NUMBER	DOC TYPE	DOC PART	REVISION
SD-121064-003	PSD	001	E1

THIRD ANGLE PROJECTION | DRAWING: A2-SIZE | SERIES: 121064 | MATERIAL NUMBER: SEE SHEET 2 | CUSTOMER: GENERAL MARKET | SHEET NUMBER: 2 OF 2

DOCUMENT STATUS	P1	RELEASE DATE	2024/12/16 13:41:11

FORMAT: master-lib-prod-A2
REVISION: J1
DATE: 2021/05/01