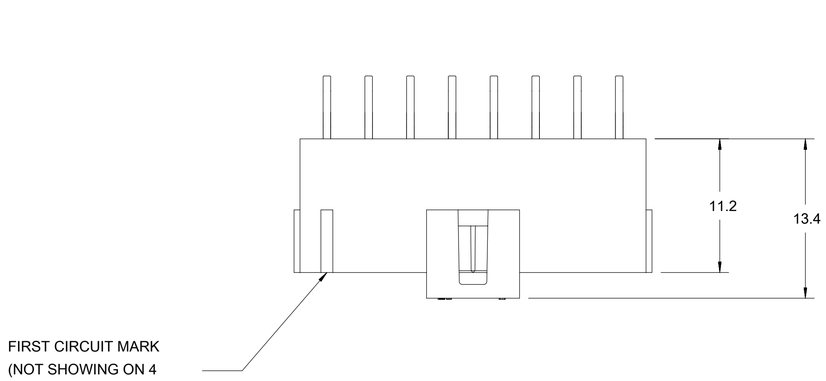

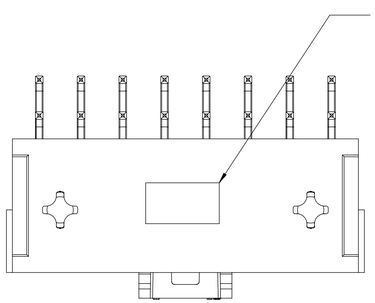

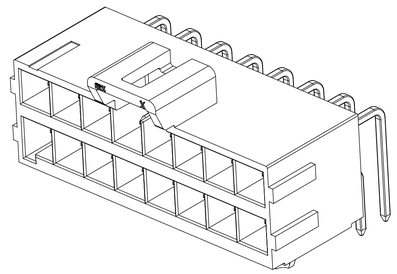

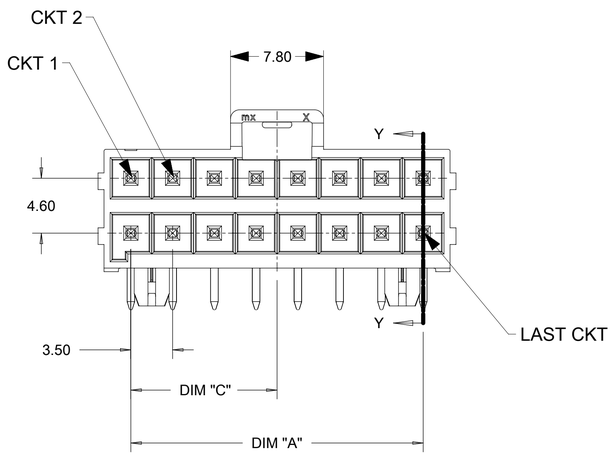

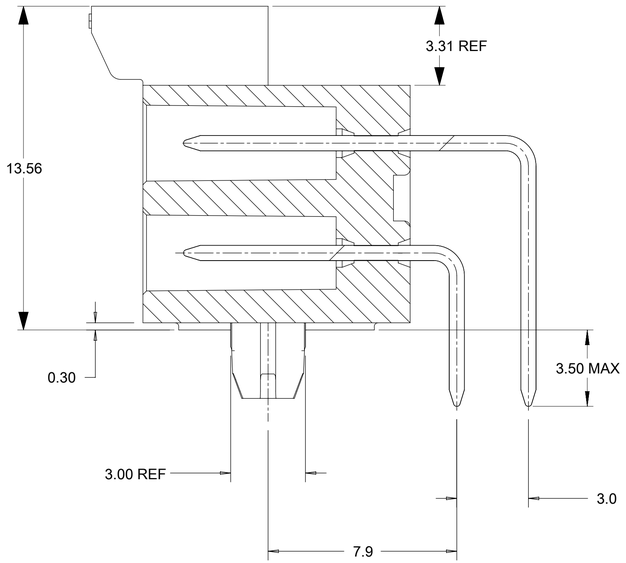

SECTION Y-Y
SCALE 8:1

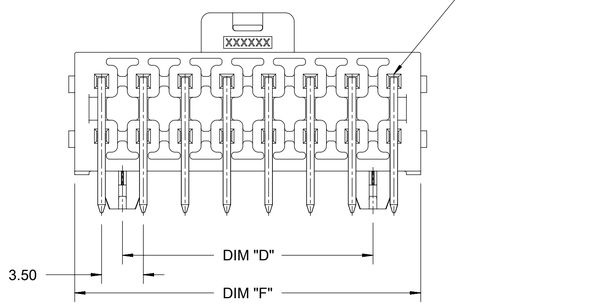

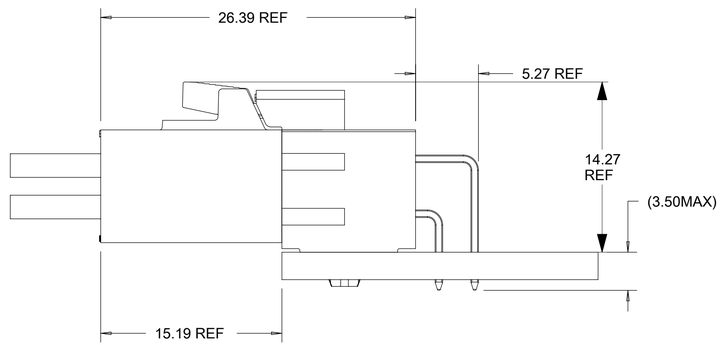

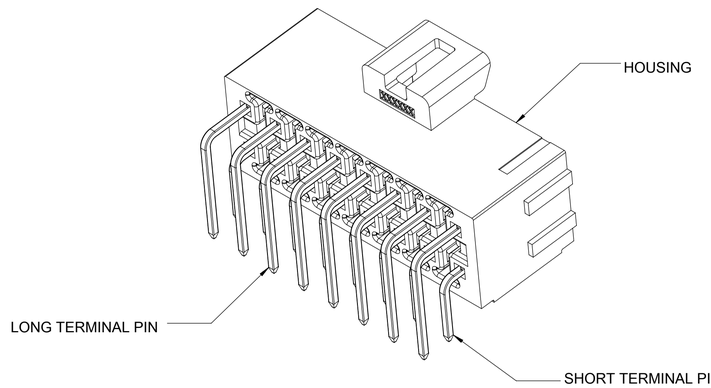

NOTES:

1. MATERIAL :
   HOUSING
   OPTION 1: LCP BLACK, UL94 V-O
   OPTION 2: LCP NATURAL, UL94 V-0
   TERMINAL: COPPER ALLOY
2. PLATING FINISH:
   OPTION 1 - 1.5µm(60µin)-2.5µm(100µin) TIN OVER
   1.25µm(50µin)-2.5µm(100µin) NICKEL OVERALL
   OPTION 2 - 0.35µm(15µin) GOLD CONTACT AREA,
   1.5µm(60µin)-2.5µm(100µin) TIN TAIL AREA OVER
   1.25µm(50µin)-2.5µm(100µin) NICKEL OVERALL
   OPTION 3 - 0.70µm(30µin) GOLD CONTACT AREA,
   1.5µm(60µin)-2.5µm(100µin) TIN TAIL AREA OVER
   1.25µm(50µin)-2.5µm(100µin) NICKEL OVERALL
3. PARTS TO BE PACKAGED PER 1723161114-PK.
4. PRODUCT SPECIFICATION PS-172323-0001
5. PART MATES WITH MOLEX RECEPTACLE HOUSING
   172258 AND 172262
6. PART CONFORMS TO CLASS "C" REQUIREMENTS OF SPECIFICATION
   PS-45499-002 WITH 0.13 MM MAXIMUM FLASH ALLOWED IN CORE
   HOLES AND FRONT SURFACE.
7. DISCOLORATION IN THE BANDOLIER AREA OF THE PIN IS
   INHERENT TO THE PLATING PROCESS AND IS DUE TO THE MASKING
   EFFECT OF THE CARRIER. THIS DISCOLORATION IS IN A NON-FUNCTIONAL
   AREA OF THE PIN AND WILL NOT AFFECT THE PERFORMANCE OF THE
   HEADER ASSEMBLY.
8. ASSEMBLY SPECIFICATION: AS-172323-0001.

DOCUMENT STATUS	P1	RELEASE DATE	2024/11/19	08:37:15

THIS DRAWING CONTAINS INFORMATION THAT IS PROPRIETARY TO MOLEX ELECTRONIC TECHNOLOGIES, LLC AND SHOULD NOT BE USED WITHOUT WRITTEN PERMISSION

DIMENSION UNITS	SCALE
mm	1:1

GENERAL TOLERANCES (UNLESS SPECIFIED)

ANGULAR TOL	±	°
4 PLACES	±	
3 PLACES	±	
2 PLACES	±	0.25
1 PLACE	±	0.5
0 PLACES	±	

DRAFT WHERE APPLICABLE MUST REMAIN WITHIN DIMENSIONS

CURRENT REV DESC: REMOVED OBSOLETED PART NUMBER AS PER PCN#514356.

EC NO: 803783

DRWN:	RAVINR1	2024/11/05
CHK'D:	GGA	2024/11/19
APPR:	GGA	2024/11/19

INITIAL REVISION:

DRWN:	DROSCA	2014/03/06
APPR:	JCOMERCI	2014/04/24

molex

ULTRA-FIT R/A HEADER
4-16 CKTS DUAL ROW

PRODUCT CUSTOMER DRAWING

DOCUMENT NUMBER	DOC TYPE	DOC PART	REVISION
SD-172316-1000	PSD	000	F9

THIRD ANGLE PROJECTION	DRAWING	SERIES	MATERIAL NUMBER	CUSTOMER	SHEET NUMBER
	D-SIZE	172316	SEE TABLE	GENERAL MARKET	1 OF 3

15 MICROINCH GOLD PLATING							
PART NO.	COLOR	CIRCUIT SIZE	KEY OPTION	DIM A	DIM F	DIM C	DIM D
172316-2206	NATURAL	6	KEY B	7.00	11.50	3.50	0.00
172316-2210	NATURAL	10	KEY B	14.00	18.50	7.00	10.50
172316-2216	NATURAL	16	KEY B	24.50	29.00	12.25	21.00

TIN PLATING							
PART NO.	COLOR	CIRCUIT SIZE	KEY OPTION	DIM A	DIM F	DIM C	DIM D
172316-1104	BLACK	4	KEY A	3.50	8.00	1.75	0.00

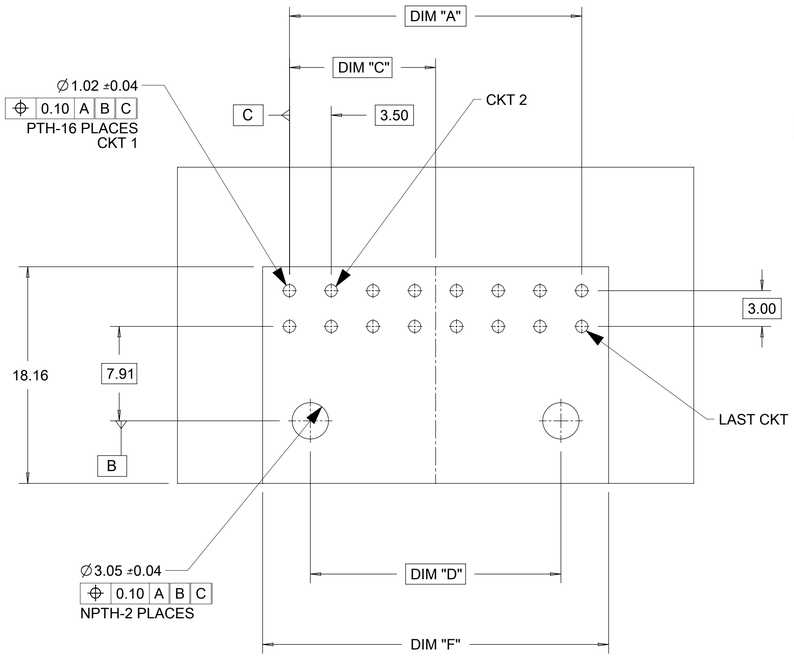

PCB LAYOUT COMPONENT SIDE
RECOMENDED PCB THICKNESS 1.60MM-2.40MM

Top2

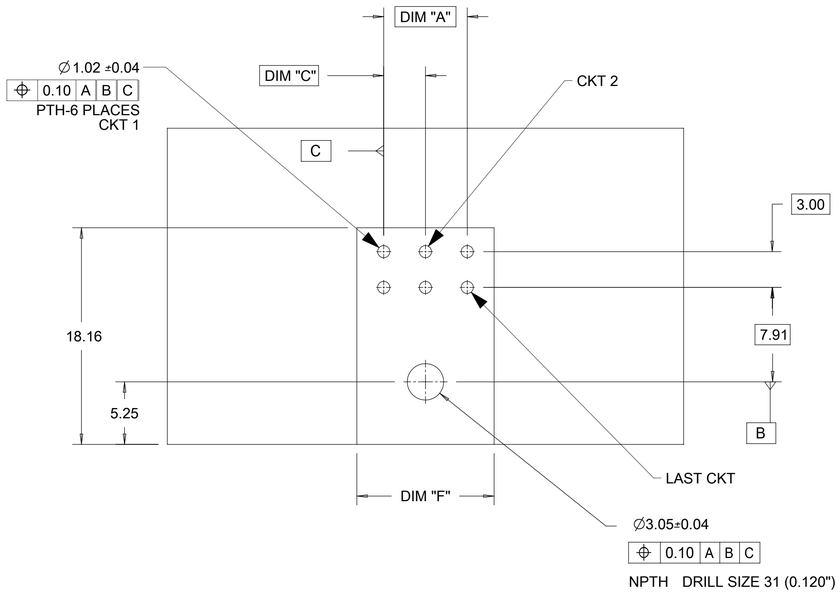

PCB LAYOUT 3 CIRCUIT COMPONENT SIDE
RECOMENDED PCB THICKNESS 1.60MM-2.40MM

Right1

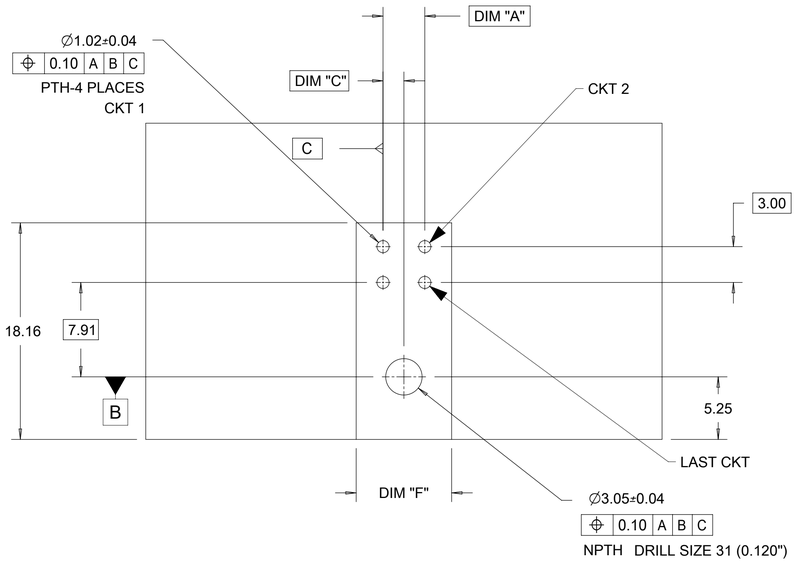

PCB LAYOUT 2 CIRCUIT COMPONENT SIDE
RECOMENDED PCB THICKNESS 1.60MM-2.40MM

Right2

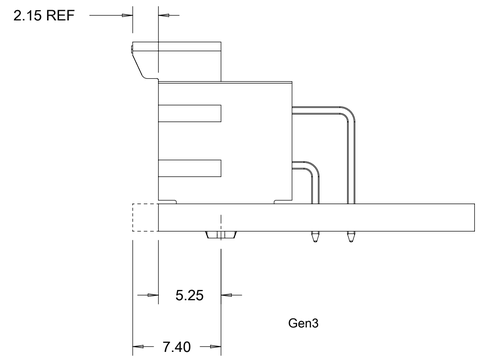

Gen3

OPTION 1: LATCH FLUSH WITH PCB EDGE
OPTION 2: HOUSING BODY FLUSH WITH PCB EDGE

NOTE: DATUM -A- IS ON COMPONENT SIDE PCB

THIS DRAWING CONTAINS INFORMATION THAT IS PROPRIETARY TO MOLEX ELECTRONIC TECHNOLOGIES, LLC AND SHOULD NOT BE USED WITHOUT WRITTEN PERMISSION

DIMENSION UNITS	mm
SCALE	1:1
GENERAL TOLERANCES (UNLESS SPECIFIED)	
ANGULAR TOL	± °
4 PLACES	±
3 PLACES	±
2 PLACES	± 0.25
1 PLACE	± 0.5
0 PLACES	±
DRAFT WHERE APPLICABLE MUST REMAIN WITHIN DIMENSIONS	

CURRENT REV DESC: REMOVED OBSOLETED PART NUMBER AS PER PCN#514356.

EC NO: 803783
DRWN: RAVINR1 2024/11/05
CHK'D: GGA 2024/11/19
APPR: GGA 2024/11/19

INITIAL REVISION:
DRWN: DROSCA 2014/03/06
APPR: JCOMERCI 2014/04/24

molex

ULTRA-FIT R/A HEADER
4-16 CKTS DUAL ROW

PRODUCT CUSTOMER DRAWING

DOCUMENT NUMBER	DOC TYPE	DOC PART	REVISION
SD-172316-1000	PSD	000	F9

THIRD ANGLE PROJECTION	DRAWING	SERIES	MATERIAL NUMBER	CUSTOMER	SHEET NUMBER
	D-SIZE	172316	SEE TABLE	GENERAL MARKET	2 OF 3

DOCUMENT STATUS	P1	RELEASE DATE	2024/11/19 08:37:15

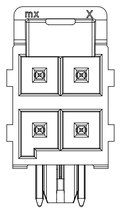

4 CKT

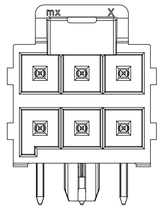

6 CKT

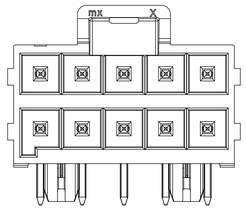

10 CKT

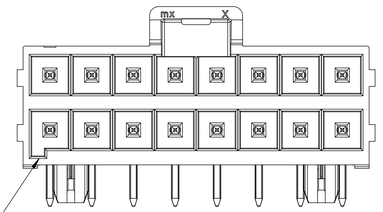

KEY A
(BLACK)

16 CKT

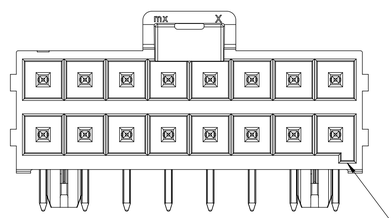

KEY B
(NATURAL)

THIS DRAWING CONTAINS INFORMATION THAT IS PROPRIETARY TO MOLEX ELECTRONIC TECHNOLOGIES, LLC AND SHOULD NOT BE USED WITHOUT WRITTEN PERMISSION

DIMENSION UNITS	SCALE
mm	1:1

GENERAL TOLERANCES (UNLESS SPECIFIED)

ANGULAR TOL	±	°
4 PLACES	±	
3 PLACES	±	
2 PLACES	±	0.25
1 PLACE	±	0.5
0 PLACES	±	

DRAFT WHERE APPLICABLE MUST REMAIN WITHIN DIMENSIONS

CURRENT REV DESC: REMOVED OBSOLETED PART NUMBER AS PER PCN#514356.

EC NO: 803783

DRWN:	RAVINR1	2024/11/05
CHK'D:	GGA	2024/11/19
APPR:	GGA	2024/11/19

INITIAL REVISION:

DRWN:	DROSCA	2014/03/06
APPR:	JCOMERCI	2014/04/24

molex

ULTRA-FIT R/A HEADER
4-16 CKTS DUAL ROW

PRODUCT CUSTOMER DRAWING

DOCUMENT NUMBER	DOC TYPE	DOC PART	REVISION
SD-172316-1000	PSD	000	F9

THIRD ANGLE PROJECTION	DRAWING	SERIES	MATERIAL NUMBER	CUSTOMER	SHEET NUMBER
	D-SIZE	172316	SEE TABLE	GENERAL MARKET	3 OF 3

DOCUMENT STATUS	P1	RELEASE DATE	2024/11/19 08:37:15

TEMPLATE created for product REVISION: 21 DATE: 2021/06/01