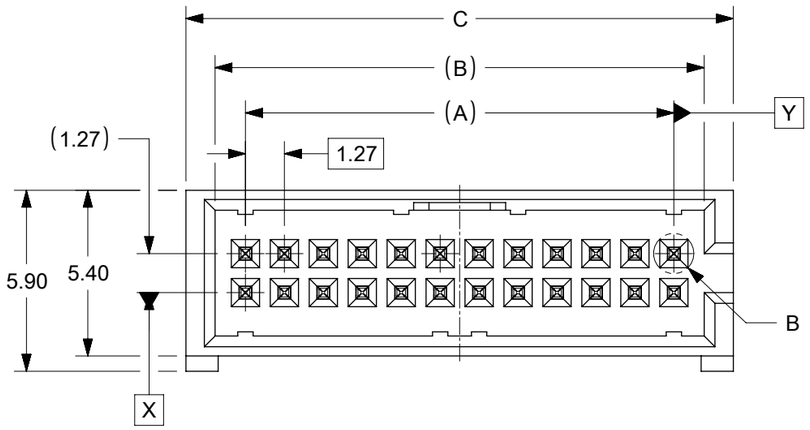

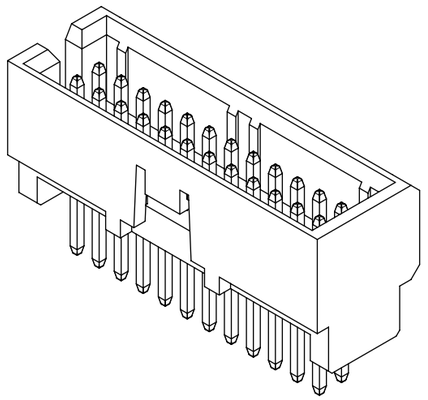

CKT SIZE	DIMENSION					
	A	B	C	D	E	F
4	1.27	3.25	5.15	-	3.05	3.04
6	2.54	4.52	6.42	4.85	4.32	4.31
8	3.81	5.79	7.69	4.85	5.59	5.58
10	5.08	7.06	8.96	4.85	6.86	6.85
12	6.35	8.33	10.23	4.85	8.13	8.12
14	7.62	9.60	11.50	4.85	9.40	9.39
16	8.89	10.87	12.77	4.85	10.67	10.66
18	10.16	12.14	14.04	4.85	11.94	11.93
20	11.43	13.41	15.31	4.85	13.21	13.20
22	12.70	14.68	16.58	4.85	14.48	14.47
24	13.97	15.95	17.85	4.85	15.75	15.74

DIMENSION G TAIL LENGTH	RECOMMENDED PCB THICKNESS
1.60	1.60
2.40	2.40
3.00	3.00

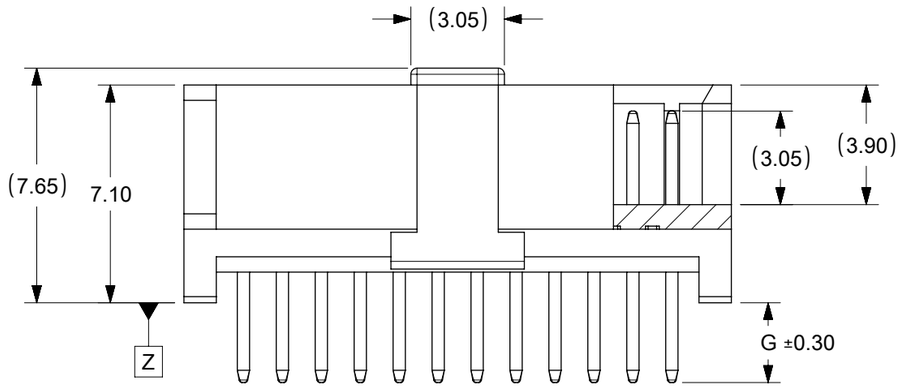

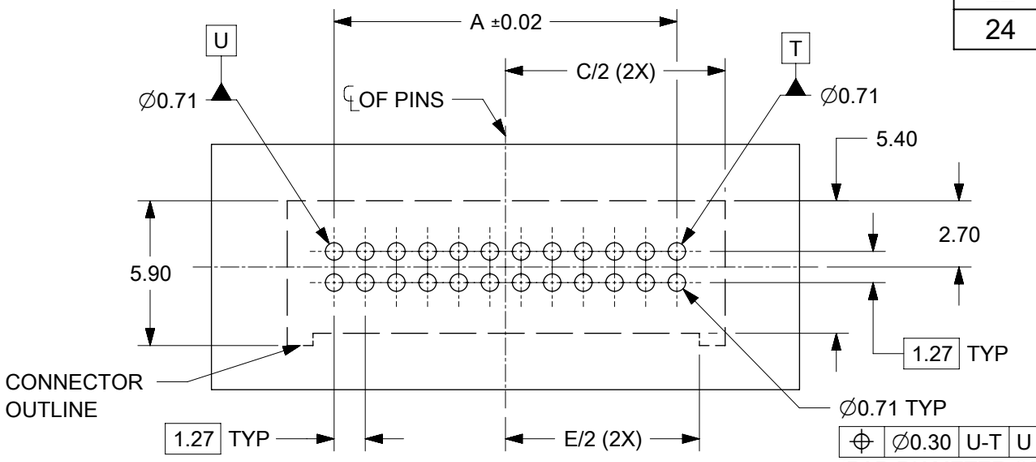

RECOMMENDED PCB LAYOUT
TOLERANCE ±0.05

(PAD DIAMETER OF 0.98MM MAX
OR 0.10MAX PAD WIDTH)

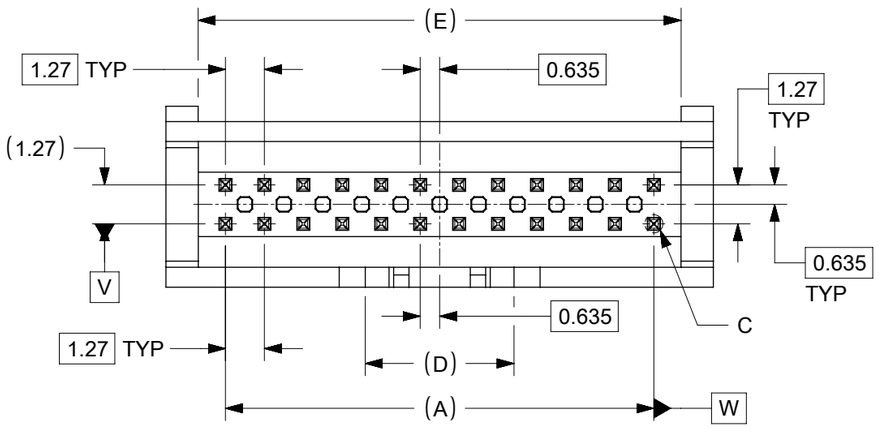

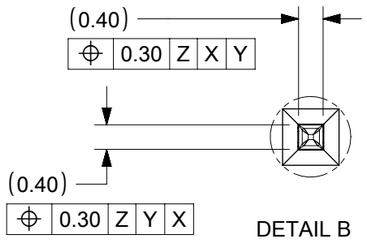

DETAIL B
SCALE 10:1

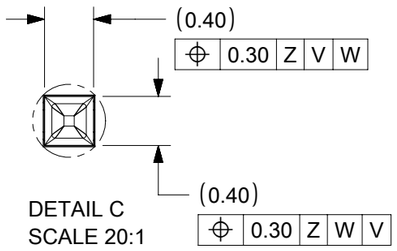

DETAIL C
SCALE 20:1

NOTES:
1. FOR ILLUSTRATION PURPOSES, 24 CIRCUIT SIZE WAFER IS SHOWN.
2. MATERIAL :
   HOUSING : LCP, GLASS-FILLED, UL94V-0, BLACK
   BANDOLIER PIN : 0.40MM SQ. COPPER ALLOY
3. FINISHES: SEE SHEET 2
4. PRODUCT SPECIFICATION: 2009890001_PS
5. PACKAGING SPECIFICATION: 2010220001_PK
6. POSITIIONING TO BE CONTROLLED BASED ON PIN TIP
7. REFER TO SHEET 2 FOR PART OPTION & PART NUMBER.
8. MATES WITH: 78120 SERIES
9 . PARTS CONFORMS TO CLASS "B" REQUIREMENT OF COSMETIC SPECIFICATION PS-45499-002
10. MOLEX LOGO AND CAVITY LOCATED AS SHOWN.
11. NON-FUNCTIONAL CORING IS SUBJECTED TO CHANGES WITHOUT NOTICE.

THIS DRAWING CONTAINS INFORMATION THAT IS PROPRIETARY TO MOLEX ELECTRONIC TECHNOLOGIES, LLC AND SHOULD NOT BE USED WITHOUT WRITTEN PERMISSION

DIMENSION UNITS	mm
SCALE	NTS
GENERAL TOLERANCES (UNLESS SPECIFIED)	
ANGULAR TOL ±	3.0 °
4 PLACES ±	
3 PLACES ±	
2 PLACES ±	0.2
1 PLACE ±	
0 PLACES ±	
DRAFT WHERE APPLICABLE MUST REMAIN WITHIN DIMENSIONS	

CURRENT REV DESC: REMASTERED & BTB DISTANCE UPDATE

EC NO: 664214
DRWN: SCHEONG 2017/09/14
CHK'D: ABABUPS 2021/05/18
APPR: MRAMAKRISHNA 2021/05/18

INITIAL REVISION:
DRWN: SCHEONG 2016/02/22
APPR: KHLIM 2016/11/24

THIRD ANGLE PROJECTION | DRAWING: A3-SIZE | SERIES: 201022

molex

1.27MM PITCH SLIM-GRID
VERTICAL THROUGH HOLE SHROUDED HEADER

PRODUCT CUSTOMER DRAWING

DOCUMENT NUMBER	DOC TYPE	DOC PART	REVISION
2010220024	PSD	000	A3

MATERIAL NUMBER	CUSTOMER	SHEET NUMBER
SEE TABLE	GENERAL MARKET	1 OF 3

DOCUMENT STATUS	P1	RELEASE DATE	2021/05/18 14:43:00

FORMAT: master-tb-prod-A3
REVISION: J
DATE: 2020/01/14

CKT SIZE	PIN TAIL LENGTH, G=1.60 ASSEMBLY WITHOUT CAP P/N	PIN TAIL LENGTH, G=1.60 ASSEMBLY WITH CAP P/N	PIN TAIL LENGTH, G=2.40 ASSEMBLY WITHOUT CAP P/N	PIN TAIL LENGTH, G=2.40 ASSEMBLY WITH CAP P/N	PIN TAIL LENGTH, G=3.00 ASSEMBLY WITHOUT CAP P/N	PIN TAIL LENGTH, G=3.00 ASSEMBLY WITH CAP P/N
4	201022-0004	201022-3004	201022-1004	201022-4004	201022-2004	201022-5004
	201022-0104	201022-3104	201022-1104	201022-4104	201022-2104	201022-5104
	201022-0204	201022-3204	201022-1204	201022-4204	201022-2204	201022-5204
6	201022-0006	201022-3006	201022-1006	201022-4006	201022-2006	201022-5006
	201022-0106	201022-3106	201022-1106	201022-4106	201022-2106	201022-5106
	201022-0206	201022-3206	201022-1206	201022-4206	201022-2206	201022-5206
8	201022-0008	201022-3008	201022-1008	201022-4008	201022-2008	201022-5008
	201022-0108	201022-3108	201022-1108	201022-4108	201022-2108	201022-5108
	201022-0208	201022-3208	201022-1208	201022-4208	201022-2208	201022-5208
10	201022-0010	201022-3010	201022-1010	201022-4010	201022-2010	201022-5010
	201022-0110	201022-3110	201022-1110	201022-4110	201022-2110	201022-5110
	201022-0210	201022-3210	201022-1210	201022-4210	201022-2210	201022-5210
12	201022-0012	201022-3012	201022-1012	201022-4012	201022-2012	201022-5012
	201022-0112	201022-3112	201022-1112	201022-4112	201022-2112	201022-5112
	201022-0212	201022-3212	201022-1212	201022-4212	201022-2212	201022-5212
14	201022-0014	201022-3014	201022-1014	201022-4014	201022-2014	201022-5014
	201022-0114	201022-3114	201022-1114	201022-4114	201022-2114	201022-5114
	201022-0214	201022-3214	201022-1214	201022-4214	201022-2214	201022-5214
16	201022-0016	201022-3016	201022-1016	201022-4016	201022-2016	201022-5016
	201022-0116	201022-3116	201022-1116	201022-4116	201022-2116	201022-5116
	201022-0216	201022-3216	201022-1216	201022-4216	201022-2216	201022-5216
18	201022-0018	201022-3018	201022-1018	201022-4018	201022-2018	201022-5018
	201022-0118	201022-3118	201022-1118	201022-4118	201022-2118	201022-5118
	201022-0218	201022-3218	201022-1218	201022-4218	201022-2218	201022-5218
20	201022-0020	201022-3020	201022-1020	201022-4020	201022-2020	201022-5020
	201022-0120	201022-3120	201022-1120	201022-4120	201022-2120	201022-5120
	201022-0220	201022-3220	201022-1220	201022-4220	201022-2220	201022-5220
22	201022-0022	201022-3022	201022-1022	201022-4022	201022-2022	201022-5022
	201022-0122	201022-3122	201022-1122	201022-4122	201022-2122	201022-5122
	201022-0222	201022-3222	201022-1222	201022-4222	201022-2222	201022-5222
24	201022-0024	201022-3024	201022-1024	201022-4024	201022-2024	201022-5024
	201022-0124	201022-3124	201022-1124	201022-4124	201022-2124	201022-5124
	201022-0224	201022-3224	201022-1224	201022-4224	201022-2224	201022-5224

LEGEND

201022 - X X X X

CKT SIZE

04 = 4 CKTS
.
24 = 24 CKTS

FINISHES

0 = 0.05um Au MIN. GOLD ON CONTACT
AND 2.00um MIN. MATTE TIN ON SOLDERTAIL
OVER 1.27um MIN. NICKEL UNDERPLATE OVERALL
1 = 0.38um Au MIN. GOLD ON CONTACT
AND 2.00um MIN. MATTE TIN ON SOLDERTAIL
OVER 1.27um MIN. NICKEL UNDERPLATE OVERALL
2 = 0.76um Au MIN. GOLD ON CONTACT
AND 2.00um MIN. MATTE TIN ON SOLDERTAIL
OVER 1.27um MIN. NICKEL UNDERPLATE OVERALL

PACKAGING TYPE AND TAIL LENGTH

TUBE AND WITHOUT CAP
0 = 1.60 P.TAIL LENGTH
1 = 2.40 P.TAIL LENGTH
2 = 3.00 P.TAIL LENGTH

TUBE AND WITH CAP
3 = 1.60 P.TAIL LENGTH
4 = 2.40 P.TAIL LENGTH
5 = 3.00 P.TAIL LENGTH

TAPE & REEL (NOT TOOLED)
6 = 1.60 P.TAIL LENGTH
7 = 2.40 P.TAIL LENGTH
8 = 3.00 P.TAIL LENGTH

THIS DRAWING CONTAINS INFORMATION THAT IS PROPRIETARY TO MOLEX ELECTRONIC TECHNOLOGIES, LLC AND SHOULD NOT BE USED WITHOUT WRITTEN PERMISSION

DIMENSION UNITS	mm
SCALE	NTS
GENERAL TOLERANCES (UNLESS SPECIFIED)	
ANGULAR TOL	± 3.0 °
4 PLACES	±
3 PLACES	±
2 PLACES	± 0.2
1 PLACE	±
0 PLACES	±
DRAFT WHERE APPLICABLE MUST REMAIN WITHIN DIMENSIONS	

CURRENT REV DESC: REMASTERED & BTB DISTANCE UPDATE

EC NO: 664214
DRWN: SCHEONG 2017/09/14
CHK'D: ABABUPS 2021/05/18
APPR: MRAMAKRISHNA 2021/05/18

INITIAL REVISION:
DRWN: SCHEONG 2016/02/22
APPR: KHLIM 2016/11/24

molex

1.27MM PITCH SLIM-GRID
VERTICAL THROUGH HOLE SHROUDED HEADER

PRODUCT CUSTOMER DRAWING

DOCUMENT NUMBER	DOC TYPE	DOC PART	REVISION
2010220024	PSD	000	A3

THIRD ANGLE PROJECTION	DRAWING	SERIES	MATERIAL NUMBER	CUSTOMER	SHEET NUMBER
	A3-SIZE	201022	SEE TABLE	GENERAL MARKET	2 OF 3

DOCUMENT STATUS	P1	RELEASE DATE	2021/05/18 14:43:00

FORMAT: master-tb-prod-A3
REVISION: J
DATE: 2020/01/14

BOARD TO BOARD (BTB) DISTANCE

HEADER	MATES WITH (RECEPTACLE)	BTB DIST.	PICTORIAL VIEW
201022	78120	7.81	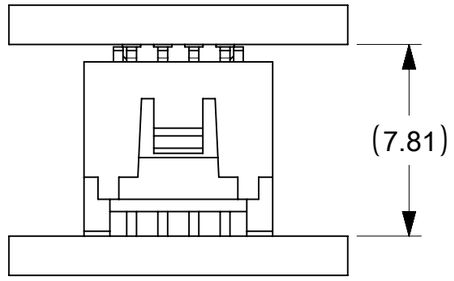

THIS DRAWING CONTAINS INFORMATION THAT IS PROPRIETARY TO MOLEX ELECTRONIC TECHNOLOGIES, LLC AND SHOULD NOT BE USED WITHOUT WRITTEN PERMISSION

DIMENSION UNITS	SCALE
mm	NTS

GENERAL TOLERANCES (UNLESS SPECIFIED)

ANGULAR TOL	± 3.0 °
4 PLACES	±
3 PLACES	±
2 PLACES	± 0.2
1 PLACE	±
0 PLACES	±

DRAFT WHERE APPLICABLE MUST REMAIN WITHIN DIMENSIONS

CURRENT REV DESC: REMASTERED & BTB DISTANCE UPDATE

EC NO: 664214

DRWN:	SCHEONG	2017/09/14
CHK'D:	ABABUPS	2021/05/18
APPR:	MRAMAKRISHNA	2021/05/18

INITIAL REVISION:

DRWN:	SCHEONG	2016/02/22
APPR:	KHLIM	2016/11/24

molex

1.27MM PITCH SLIM-GRID
VERTICAL THROUGH HOLE SHROUDED HEADER

PRODUCT CUSTOMER DRAWING

DOCUMENT NUMBER	DOC TYPE	DOC PART	REVISION
2010220024	PSD	000	A3

THIRD ANGLE PROJECTION	DRAWING	SERIES	MATERIAL NUMBER	CUSTOMER	SHEET NUMBER
	A3-SIZE	201022	SEE TABLE	GENERAL MARKET	3 OF 3

DOCUMENT STATUS	P1	RELEASE DATE	2021/05/18 14:43:00

FORMAT: master-tb-prod-A3
REVISION: J
DATE: 2020/01/14