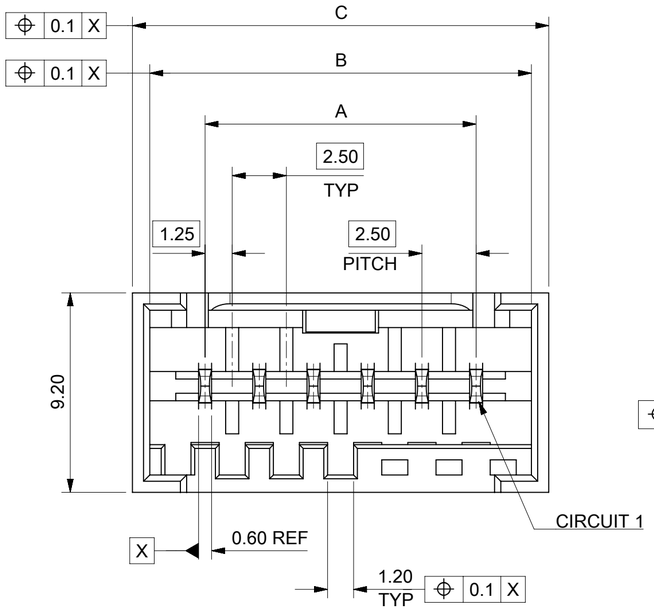

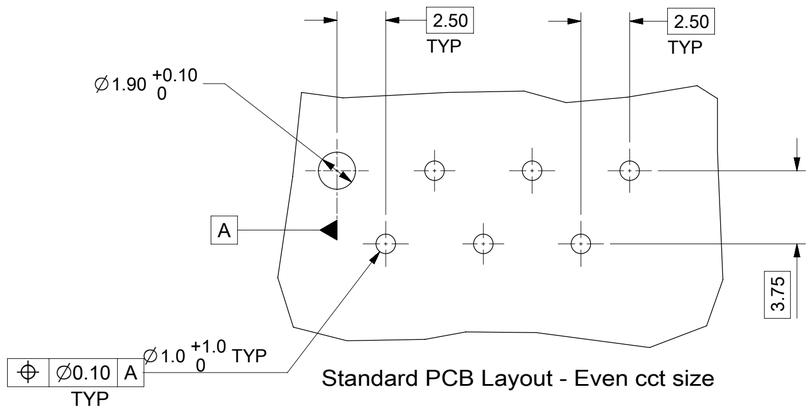

Standard PCB Layout - Even cct size

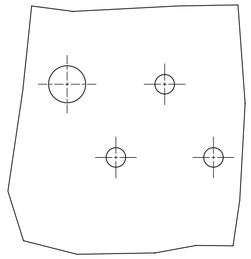

Standard PCB Layout - Odd cct size

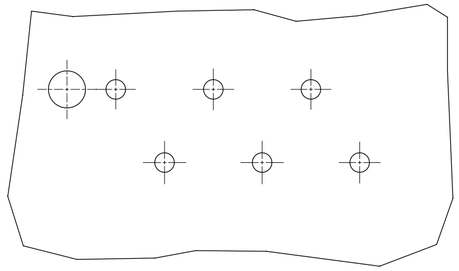

Opposite PCB Layout - Even cct size

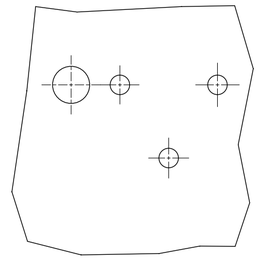

Opposite PCB Layout - Odd cct size

CCT	A	B	C
3	5.00	10.10	11.70
4	7.50	12.60	14.20
5	10.00	15.10	16.70
6	12.50	17.60	19.20
7	15.00	20.10	21.70
8	17.50	22.60	24.20
9	20.00	25.10	26.70
10	22.50	27.60	29.20
11	25.00	30.10	31.70
12	27.50	32.60	34.20
13	30.00	35.10	36.70
14	32.50	37.60	39.20
15	35.00	40.10	41.70

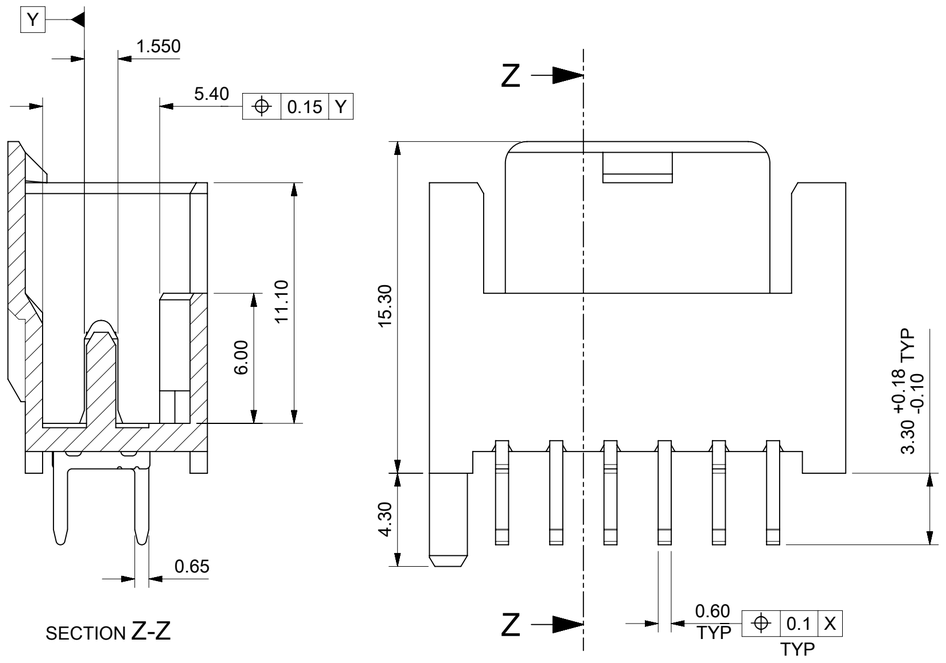

SECTION Z-Z

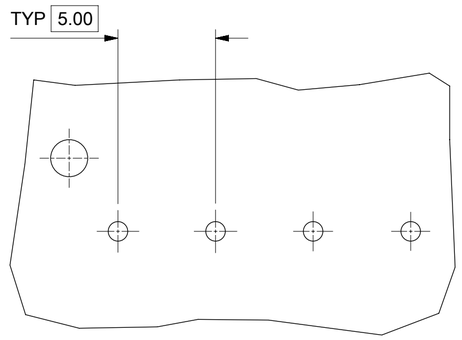

Option C PCB Layout - Even cct size

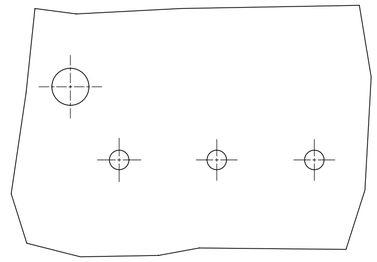

Option C PCB Layout - Odd cct size

NOTES:

1. MATERIAL: HOUSING - PA66 25% G/F, UL94 V-0
   COLOUR: NATURAL
   TERMINAL - BRASS
   PLATING - 3-7µm Sn over 1.27µm Min Ni
2. PARTS PACKED AS PER PK-90370-001
3. PRODUCT SPECIFICATION: PS-93070-001
4. RECOMMENDED PCB THICKNESS: 1.5+/-0.14mm

DOCUMENT STATUS	P1	RELEASE DATE	2025/08/19 05:38:43

THIS DRAWING CONTAINS INFORMATION THAT IS PROPRIETARY TO MOLEX ELECTRONIC TECHNOLOGIES, LLC AND SHOULD NOT BE USED WITHOUT WRITTEN PERMISSION

DIMENSION UNITS	SCALE
mm	1:1

GENERAL TOLERANCES (UNLESS SPECIFIED)

ANGULAR TOL	± 2.0 °
4 PLACES	±
3 PLACES	± 0.05
2 PLACES	± 0.1
1 PLACE	± 0.2
0 PLACES	±

DRAFT WHERE APPLICABLE MUST REMAIN WITHIN DIMENSIONS

CURRENT REV DESC:

EC NO: 831787
DRWN: PRAMOD 2025/08/18
CHK'D: GANESY 2025/08/19
APPR: GANESY 2025/08/19

INITIAL REVISION:
DRWN: CRAODOREMS 2017/09/28
APPR: BRUTTLE 2018/03/20

THIRD ANGLE PROJECTION | DRAWING: A2-SIZE | SERIES: 93070

molex

RAST 2.5 APPLI-MATE
VERTICAL MALE HEADER 2.5 PITCH

PRODUCT CUSTOMER DRAWING

DOCUMENT NUMBER	DOC TYPE	DOC PART	REVISION
930700001	PSD	000	B4

MATERIAL NUMBER	CUSTOMER	SHEET NUMBER
SEE SHEETS 2-7	GENERAL MARKET	1 OF 8

FORMAT: master-b-prod-A2
REVISION: H
DATE: 2019/01/18

3 CIRCUIT

MOLEX PART NO.	HOUSING PART NO.	BLOCKED POSITION KEYS	TERMINAL VOID POSITION	CONFIGURATION	LATCH	CCT 1 LOCATION	HOUSING COLOUR
93070-0001	91698-0001	NONE	NONE	1 2 3	YES	STANDARD	NATURAL
93070-0002	91698-0007	b d	NONE	b d / 1 2 3	YES	STANDARD	NATURAL
93070-0003	91698-0010	b c	NONE	b c / 1 2 3	YES	STANDARD	NATURAL
93070-0004	91698-0006	d	NONE	d / 1 2 3	YES	STANDARD	NATURAL
93070-0005	91698-0003	a	NONE	a / 1 2 3	YES	STANDARD	NATURAL
93070-0006	91698-0009	a b	NONE	a b / 1 2 3	YES	STANDARD	NATURAL
93070-0007	91698-0008	a c	NONE	a c / 1 2 3	YES	STANDARD	NATURAL
93070-0008	91698-0002	a d	NONE	a d / 1 2 3	YES	STANDARD	NATURAL
93070-0009	91698-0011	c d	NONE	c d / 1 2 3	YES	STANDARD	NATURAL
93070-0010	91698-0004	b	NONE	b / 1 2 3	YES	STANDARD	NATURAL
93070-0011	91698-0251	NONE	NONE	1 2 3	NO	STANDARD	NATURAL
93070-0012	91698-0018	b d	NONE	b d / 1 2 3	YES	STANDARD	BLUE
93070-0013	91698-0019	b c	NONE	b c / 1 2 3	YES	STANDARD	RED
93070-0014	91698-0020	d	NONE	d / 1 2 3	YES	STANDARD	GREEN
93070-0015	91698-0021	a	NONE	a / 1 2 3	YES	STANDARD	BLACK
93070-0016	91698-0252	b c INTERNAL LATCHING	NONE	b c / 1 2 3	NO	STANDARD	NATURAL

3 CIRCUIT WITHOUT PEG OPTION (CUSTOMIZED PART)

MOLEX PART NO.	HOUSING PART NO.	BLOCKED POSITION KEYS	TERMINAL VOID POSITION	CONFIGURATION	LATCH	CCT 1 LOCATION	HOUSING COLOUR
93070-0017	91698-0253	NONE	NONE	1 2 3	YES	STANDARD	NATURAL

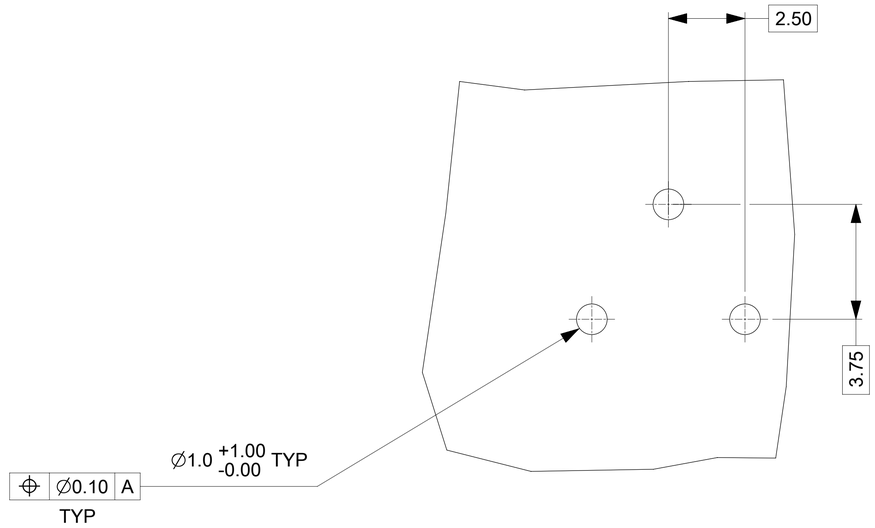

RECOMMENDED PCB LAYOUT FOR P/N: 93070-0017

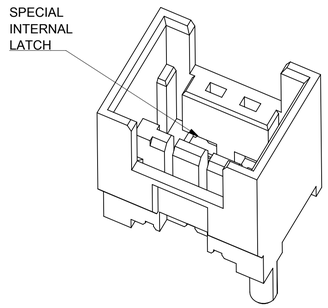

NOTES:

1. ⊕ DENOTES TERMINAL VOIDED POSITION.
   ⊕ DENOTES TERMINAL LOADED POSITION.
   ⊕ DENOTES SPECIAL INTERNAL LATCHING.

THIS DRAWING CONTAINS INFORMATION THAT IS PROPRIETARY TO MOLEX ELECTRONIC TECHNOLOGIES, LLC AND SHOULD NOT BE USED WITHOUT WRITTEN PERMISSION

DIMENSION UNITS	mm
SCALE	1:1
GENERAL TOLERANCES (UNLESS SPECIFIED)	
ANGULAR TOL	± 2.0 °
4 PLACES	±
3 PLACES	± 0.05
2 PLACES	± 0.1
1 PLACE	± 0.2
0 PLACES	±
DRAFT WHERE APPLICABLE MUST REMAIN WITHIN DIMENSIONS	

CURRENT REV DESC:

EC NO: 831787
DRWN: PRAMOD 2025/08/18
CHK'D: GANESY 2025/08/19
APPR: GANESY 2025/08/19

INITIAL REVISION:
DRWN: CRAODOREMS 2017/09/28
APPR: BRUTTLE 2018/03/20

molex

RAST 2.5 APPLI-MATE
VERTICAL MALE HEADER 2.5 PITCH

PRODUCT CUSTOMER DRAWING

DOCUMENT NUMBER	DOC TYPE	DOC PART	REVISION
930700001	PSD	000	B4

THIRD ANGLE PROJECTION	DRAWING	SERIES	MATERIAL NUMBER	CUSTOMER	SHEET NUMBER
	A1-SIZE	93070	SEE SHEETS 2-7	GENERAL MARKET	2 OF 8

DOCUMENT STATUS	P1	RELEASE DATE	2025/08/19 05:38:43

4 CIRCUIT

MOLEX PART NO.	HOUSING PART NO.	BLOCKED POSITION KEYS	TERMINAL VOID POSITION	CONFIGURATION	LATCH	CCT 1 LOCATION	HOUSING COLOUR
93070-0501	91698-0501	NONE	NONE	1 2 3 4	YES	STANDARD	NATURAL
93070-0502	91698-0507	b c	NONE	b c 1 2 3 4	YES	STANDARD	NATURAL
93070-0503	91698-0507	b c	CCT 4	b c 1 2 3 4	YES	STANDARD	NATURAL
93070-0504	91698-0512	c d	NONE	c d 1 2 3 4	YES	STANDARD	NATURAL
93070-0505	91698-0501	NONE	CCT 1	1 2 3 4	YES	STANDARD	NATURAL
93070-0601	91698-0507	b c	NONE	b c 1 2 3 4	YES	OPPOSITE	NATURAL
93070-0506	91698-0506	b	NONE	b 1 2 3 4	YES	STANDARD	NATURAL
93070-0507	91698-0514	c	NONE	c 1 2 3 4	YES	STANDARD	NATURAL
93070-0508	91698-0502	d	NONE	d 1 2 3 4	YES	STANDARD	NATURAL
93070-0509	91698-0515	a c d	NONE	a c d 1 2 3 4	YES	STANDARD	NATURAL
93070-0510	91698-0516	b c d	NONE	b c d 1 2 3 4	YES	STANDARD	NATURAL
93070-0511	91698-0517	b c d	NONE	b c d 1 2 3 4	YES	STANDARD	RED
93070-0512	91698-0518	d	NONE	d 1 2 3 4	YES	STANDARD	RED
93070-0513	91698-0519	b d	NONE	b d 1 2 3 4	YES	STANDARD	NATURAL
93070-0514	91698-0509	d e	NONE	d e 1 2 3 4	YES	STANDARD	NATURAL
93070-0515	91698-0513	a c e	NONE	a c e 1 2 3 4	YES	STANDARD	NATURAL
93070-0516	91698-0520	b	NONE	b 1 2 3 4	YES	STANDARD	RED
93070-0517	91698-0521	d	NONE	d 1 2 3 4	YES	STANDARD	BLUE
93070-0518	91698-0519	b d	CCT 2,3	b d 1 2 3 4	YES	STANDARD	NATURAL
93070-0519	91698-0505	a	NONE	a 1 2 3 4	YES	STANDARD	NATURAL
93070-0520	91698-0522	b e	NONE	b e 1 2 3 4	YES	STANDARD	NATURAL

4 CIRCUIT WITHOUT PEG OPTION (CUSTOMIZED PART)

MOLEX PART NO.	HOUSING PART NO.	BLOCKED POSITION KEYS	TERMINAL VOID POSITION	CONFIGURATION	LATCH	CCT 1 LOCATION	HOUSING COLOUR
93070-0521	91698-0523	NONE	NONE	1 2 3 4	YES	STANDARD	NATURAL

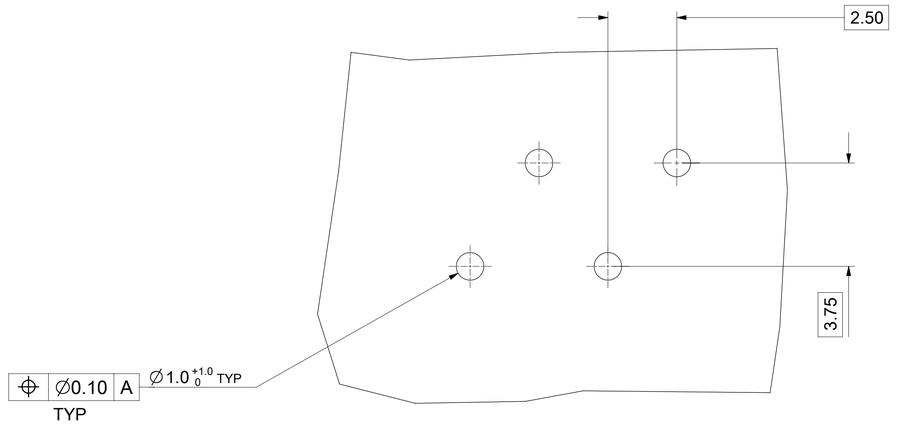

RECOMMENDED PCB LAYOUT FOR P/N: 93070-0521

THIS DRAWING CONTAINS INFORMATION THAT IS PROPRIETARY TO MOLEX ELECTRONIC TECHNOLOGIES, LLC AND SHOULD NOT BE USED WITHOUT WRITTEN PERMISSION

DIMENSION UNITS	SCALE
mm	1:1

GENERAL TOLERANCES (UNLESS SPECIFIED)

ANGULAR TOL	± 2.0 °
4 PLACES	±
3 PLACES	± 0.05
2 PLACES	± 0.1
1 PLACE	± 0.2
0 PLACES	±

DRAFT WHERE APPLICABLE MUST REMAIN WITHIN DIMENSIONS

CURRENT REV DESC:

EC NO: 831787
DRWN: PRAMOD 2025/08/18
CHK'D: GANESY 2025/08/19
APPR: GANESY 2025/08/19

INITIAL REVISION:
DRWN: CRAODOREMS 2017/09/28
APPR: BRUTTLE 2018/03/20

molex

RAST 2.5 APPLI-MATE
VERTICAL MALE HEADER 2.5 PITCH

PRODUCT CUSTOMER DRAWING

DOCUMENT NUMBER	DOC TYPE	DOC PART	REVISION
930700001	PSD	000	B4

THIRD ANGLE PROJECTION	DRAWING	SERIES	MATERIAL NUMBER	CUSTOMER	SHEET NUMBER
	A1-SIZE	93070		GENERAL MARKET	3 OF 8

DOCUMENT STATUS	P1	RELEASE DATE	2025/08/19 05:38:43

5 CIRCUIT

MOLEX PART NO.	HOUSING PART NO.	BLOCKED POSITION KEYS	TERMINAL VOID POSITION	CONFIGURATION	LATCH	CCT 1 LOCATION	HOUSING COLOUR
93070-1001	91698-1001	NONE	NONE	1 2 3 4 5	YES	STANDARD	NATURAL
93070-1002	91698-1004	c d	NONE	c d 1 2 3 4 5	YES	STANDARD	NATURAL
93070-1003	91698-1008	a d f	NONE	a d f 1 2 3 4 5	YES	STANDARD	NATURAL
93070-1101	91698-1001	NONE	NONE	1 2 3 4 5	YES	OPPOSITE	NATURAL
93070-1004	91698-1009	d	NONE	d 1 2 3 4 5	YES	STANDARD	NATURAL
93070-1005	91698-1007	a b e f	NONE	a b e f 1 2 3 4 5	YES	STANDARD	NATURAL
93070-1006	91698-1011	b c d e	NONE	b c d e 1 2 3 4 5	YES	STANDARD	NATURAL
93070-1007	91698-1014	c d	NONE	c d 1 2 3 4 5	YES	STANDARD	RED
93070-1008	91698-1017	a b e f	NONE	a b e f 1 2 3 4 5	YES	STANDARD	BLUE
93070-1009	91698-1028	b c d e	NONE	b c d e 1 2 3 4 5	YES	STANDARD	BLUE
93070-1010	91698-1018	d e	NONE	d e 1 2 3 4 5	YES	STANDARD	NATURAL
93070-1011	91698-1019	b d e	NONE	b d e 1 2 3 4 5	YES	STANDARD	NATURAL
93070-1012	91698-1020	a c f	NONE	a c f 1 2 3 4 5	YES	STANDARD	NATURAL
93070-1013	91698-1021	a b c d	NONE	a b c d 1 2 3 4 5	YES	STANDARD	NATURAL
93070-1014	91698-1022	a b d e	NONE	a b d e 1 2 3 4 5	YES	STANDARD	NATURAL
93070-1015	91698-1023	a b c e	NONE	a b c e 1 2 3 4 5	YES	STANDARD	NATURAL
93070-1016	91698-1024	b d e	CCT 4	b d e 1 2 3 4 5	YES	STANDARD	GREEN
93070-1018	91698-1001	NONE	CCT 2, 3	1 2 3 4 5	YES	STANDARD	NATURAL

B4

5 CIRCUIT WITHOUT PEG OPTION (CUSTOMIZED PART)

MOLEX PART NO.	HOUSING PART NO.	BLOCKED POSITION KEYS	TERMINAL VOID POSITION	CONFIGURATION	LATCH	CCT 1 LOCATION	HOUSING COLOUR
93070-1017	91698-1029	a c d f	NONE	a c d f 1 2 3 4 5	YES	STANDARD	NATURAL

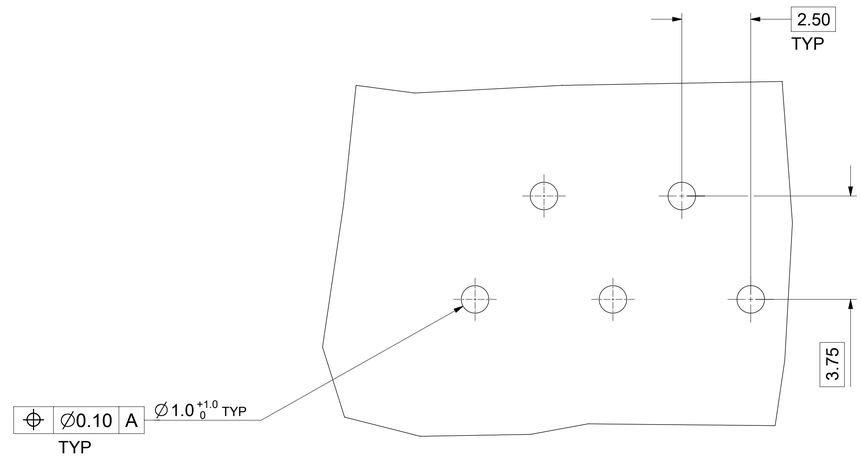

RECOMMENDED PCB LAYOUT FOR P/N: 93070-1017

NOTES:

1. ⌖ DENOTES TERMINAL VOIDED POSITION.

   ⊕ DENOTES TERMINAL LOADED POSITION.

THIS DRAWING CONTAINS INFORMATION THAT IS PROPRIETARY TO MOLEX ELECTRONIC TECHNOLOGIES, LLC AND SHOULD NOT BE USED WITHOUT WRITTEN PERMISSION

DIMENSION UNITS	SCALE
mm	1:1

GENERAL TOLERANCES (UNLESS SPECIFIED)

ANGULAR TOL	±	2.0 °
4 PLACES	±	
3 PLACES	±	0.05
2 PLACES	±	0.1
1 PLACE	±	0.2
0 PLACES	±	

DRAFT WHERE APPLICABLE MUST REMAIN WITHIN DIMENSIONS

CURRENT REV DESC:

EC NO: 831787
DRWN: PRAMOD 2025/08/18
CHK'D: GANESY 2025/08/19
APPR: GANESY 2025/08/19

INITIAL REVISION:
DRWN: CRAODOREMS 2017/09/28
APPR: BRUTTLE 2018/03/20

THIRD ANGLE PROJECTION | DRAWING: A1-SIZE | SERIES: 93070

molex

RAST 2.5 APPLI-MATE
VERTICAL MALE HEADER 2.5 PITCH

PRODUCT CUSTOMER DRAWING

DOCUMENT NUMBER	DOC TYPE	DOC PART	REVISION
930700001	PSD	000	B4

MATERIAL NUMBER	CUSTOMER	SHEET NUMBER
SEE SHEETS 2-7	GENERAL MARKET	4 OF 8

DOCUMENT STATUS	P1	RELEASE DATE	2025/08/19 05:38:43

6 CIRCUIT

MOLEX PART NO.	HOUSING PART NO.	BLOCKED POSITION KEYS	TERMINAL VOID POSITION	CONFIGURATION	LATCH	CCT 1 LOCATION	HOUSING COLOUR
93070-1501	91698-1501	NONE	NONE	1 2 3 4 5 6	YES	STANDARD	NATURAL
93070-1502	91698-1508	d f	CCT 2, 5	1 2 3 4 5 6	YES	STANDARD	NATURAL
93070-1503	91698-1513	c e	NONE	1 2 3 4 5 6	YES	STANDARD	NATURAL
93070-1505	91698-1508	d f	NONE	1 2 3 4 5 6	YES	STANDARD	NATURAL
93070-1506	91698-1514	b d f	CCT 4, 5	1 2 3 4 5 6	YES	STANDARD	NATURAL
93070-1507	91698-1501	NONE	CCT 2	1 2 3 4 5 6	YES	STANDARD	NATURAL
93070-1508	91698-1511	c f	CCT 2	1 2 3 4 5 6	YES	STANDARD	NATURAL
93070-1509	91698-1515	d	NONE	1 2 3 4 5 6	YES	STANDARD	NATURAL
93070-1510	91698-1516	a b c e f	NONE	1 2 3 4 5 6	YES	STANDARD	NATURAL
93070-1511	91698-1507	e f	NONE	1 2 3 4 5 6	YES	STANDARD	NATURAL
93070-1512	91698-1517	d f	NONE	1 2 3 4 5 6	YES	STANDARD	GREEN
93070-1513	91698-1512	b d e f	CCT 2, 4	1 2 3 4 5 6	YES	STANDARD	NATURAL
93070-1514	91698-1518	a b d f	NONE	1 2 3 4 5 6	YES	STANDARD	NATURAL
93070-1515	91698-1516	a b c e f	CCT 1	1 2 3 4 5 6	YES	STANDARD	NATURAL
93070-1516	91698-1751	NONE	NONE	1 2 3 4 5 6	NO	STANDARD	NATURAL
93070-1517	91698-1519	c d	CCT 2, 5	1 2 3 4 5 6	YES	STANDARD	NATURAL
93070-1518	91698-1520	c e g	NONE	1 2 3 4 5 6	YES	STANDARD	RED
93070-1519	91698-1521	d f	NONE	1 2 3 4 5 6	YES	STANDARD	BLACK

THIS DRAWING CONTAINS INFORMATION THAT IS PROPRIETARY TO MOLEX ELECTRONIC TECHNOLOGIES, LLC AND SHOULD NOT BE USED WITHOUT WRITTEN PERMISSION

DIMENSION UNITS	SCALE
mm	1:1

GENERAL TOLERANCES (UNLESS SPECIFIED)

ANGULAR TOL	±	2.0 °
4 PLACES	±	
3 PLACES	±	0.05
2 PLACES	±	0.1
1 PLACE	±	0.2
0 PLACES	±	

DRAFT WHERE APPLICABLE MUST REMAIN WITHIN DIMENSIONS

CURRENT REV DESC:

EC NO: 831787
DRWN: PRAMOD 2025/08/18
CHK'D: GANESY 2025/08/19
APPR: GANESY 2025/08/19

INITIAL REVISION:
DRWN: CRAODOREMS 2017/09/28
APPR: BRUTTLE 2018/03/20

molex

RAST 2.5 APPLI-MATE
VERTICAL MALE HEADER 2.5 PITCH

PRODUCT CUSTOMER DRAWING

DOCUMENT NUMBER	DOC TYPE	DOC PART	REVISION
930700001	PSD	000	B4

THIRD ANGLE PROJECTION | DRAWING: A1-SIZE | SERIES: 93070

MATERIAL NUMBER	CUSTOMER	SHEET NUMBER
SEE SHEETS 2-7	GENERAL MARKET	5 OF 8

DOCUMENT STATUS	P1	RELEASE DATE	2025/08/19 05:38:43

7 CIRCUIT

MOLEX PART NO.	HOUSING PART NO.	BLOCKED POSITION KEYS	TERMINAL VOID POSITION	CONFIGURATION	LATCH	CCT 1 LOCATION	HOUSING COLOUR
93070-2001	91698-2001	NONE	NONE	1 2 3 4 5 6 7	YES	STANDARD	NATURAL
93070-2002	91698-2006	a f	CCT 2, 6	a f 1 2 3 4 5 6 7	YES	STANDARD	NATURAL
93070-2003	91698-2007	d g	CCT 4	d g 1 2 3 4 5 6 7	YES	STANDARD	NATURAL
93070-2004	91698-2008	a e	CCT 4	a e 1 2 3 4 5 6 7	YES	STANDARD	NATURAL
93070-2005	91698-2009	d f g	CCT 4	d f g 1 2 3 4 5 6 7	YES	STANDARD	NATURAL
93070-2006	91698-2006	a f	CCT 4	a f 1 2 3 4 5 6 7	YES	STANDARD	NATURAL
93070-2007	91698-2003	a	NONE	a 1 2 3 4 5 6 7	YES	STANDARD	NATURAL
93070-2008	91698-2001	NONE	CCT 2	1 2 3 4 5 6 7	YES	STANDARD	NATURAL
93070-2009	91698-2003	a	CCT 4	a 1 2 3 4 5 6 7	YES	STANDARD	NATURAL
93070-2010	91698-2005	h	CCT 2	h 1 2 3 4 5 6 7	YES	STANDARD	NATURAL
93070-2011	91698-2010	b e g	NONE	b e g 1 2 3 4 5 6 7	YES	STANDARD	NATURAL
93070-2013	91698-2005	h	CCT 2	h 1 2 3 4 5 6 7	YES	STANDARD	NATURAL
93070-2014	91698-2016	ALL	NONE	a b c d e f g h 1 2 3 4 5 6 7	YES	STANDARD	NATURAL
93070-2015	91698-2012	b c d e f g	NONE	b c d e f g 1 2 3 4 5 6 7	YES	STANDARD	NATURAL

8 CIRCUIT

MOLEX PART NO.	HOUSING PART NO.	BLOCKED POSITION KEYS	TERMINAL VOID POSITION	CONFIGURATION	LATCH	CCT 1 LOCATION	HOUSING COLOUR
93070-2501	91698-2501	NONE	NONE	1 2 3 4 5 6 7 8	YES	STANDARD	NATURAL
93070-2502	91698-2504	c f h i	NONE	c f h i 1 2 3 4 5 6 7 8	YES	STANDARD	NATURAL
93070-2503	91698-2503	b c d h i	CCT 4, 7	b c d h i 1 2 3 4 5 6 7 8	YES	STANDARD	NATURAL
93070-2601	91698-2501	NONE	CCT 4, 7	1 2 3 4 5 6 7 8	YES	OPPOSITE	NATURAL
93070-2504	91698-2503	b c d h i	NONE	b c d h i 1 2 3 4 5 6 7 8	YES	STANDARD	NATURAL
93070-2505	91698-2507	a c e f h i	NONE	a c e f h i 1 2 3 4 5 6 7 8	YES	STANDARD	NATURAL
93070-2506	91698-2508	a b d f h i	CCT 7, 8	a b d f h i 1 2 3 4 5 6 7 8	YES	STANDARD	NATURAL
93070-2508	91698-2505	b c d g h i	NONE	b c d g h i 1 2 3 4 5 6 7 8	YES	STANDARD	NATURAL
93070-2509	91698-2506	c d e h	NONE	c d e h 1 2 3 4 5 6 7 8	YES	STANDARD	NATURAL
93070-2510	91698-2509	c h i	NONE	c h i 1 2 3 4 5 6 7 8	YES	STANDARD	NATURAL
93070-2511	91698-2510	c g	NONE	c g 1 2 3 4 5 6 7 8	YES	STANDARD	NATURAL

NOTES:

1. + DENOTES TERMINAL VOIDED POSITION.

⊕ DENOTES TERMINAL LOADED POSITION.

THIS DRAWING CONTAINS INFORMATION THAT IS PROPRIETARY TO MOLEX ELECTRONIC TECHNOLOGIES, LLC AND SHOULD NOT BE USED WITHOUT WRITTEN PERMISSION

DIMENSION UNITS	SCALE
mm	1:1

GENERAL TOLERANCES (UNLESS SPECIFIED)

ANGULAR TOL	±	2.0 °
4 PLACES	±	
3 PLACES	±	0.05
2 PLACES	±	0.1
1 PLACE	±	0.2
0 PLACES	±	

DRAFT WHERE APPLICABLE MUST REMAIN WITHIN DIMENSIONS

CURRENT REV DESC:

EC NO: 831787
DRWN: PRAMOD 2025/08/18
CHK'D: GANESY 2025/08/19
APPR: GANESY 2025/08/19

INITIAL REVISION:
DRWN: CRAODOREMS 2017/09/28
APPR: BRUTTLE 2018/03/20

molex

RAST 2.5 APPLI-MATE
VERTICAL MALE HEADER 2.5 PITCH

PRODUCT CUSTOMER DRAWING

DOCUMENT NUMBER	DOC TYPE	DOC PART	REVISION
930700001	PSD	000	B4

THIRD ANGLE PROJECTION	DRAWING	SERIES	MATERIAL NUMBER	CUSTOMER	SHEET NUMBER
	A1-SIZE	93070	SEE SHEETS 2-7	GENERAL MARKET	6 OF 8

DOCUMENT STATUS	P1	RELEASE DATE	2025/08/19 05:38:43

CURRENT REVISION
REVISION #
DATE 2018/03/19

9 CIRCUIT

MOLEX PART NO.	HOUSING PART NO.	BLOCKED POSITION KEYS	TERMINAL VOID POSITION	CONFIGURATION	LATCH	CCT 1 LOCATION	HOUSING COLOUR
93070-3001	91698-3001	NONE	NONE	1 2 3 4 5 6 7 8 9	YES	STANDARD	NATURAL
93070-3002	91698-3003	ALL	CCT 2, 5, 8	a b c d e f g h i j / 1 2 3 4 5 6 7 8 9	YES	STANDARD	NATURAL
93070-3101	91698-3001	NONE	CCT 3, 5, 8	1 2 3 4 5 6 7 8 9	YES	OPPOSITE	NATURAL
93070-3003	91698-3004	c d e i j	CCT 3, 5, 8	c d e i j / 1 2 3 4 5 6 7 8 9	YES	STANDARD	NATURAL
93070-3004	91698-3001	NONE	CCT 2, 5, 8	1 2 3 4 5 6 7 8 9	YES	STANDARD	NATURAL
93070-3005	91698-3006	b c d e f g i	CCT 3, 5, 8	b c d e f g i / 1 2 3 4 5 6 7 8 9	YES	STANDARD	NATURAL
93070-3006	91698-3010	a d e f g j	NONE	a d e f g j / 1 2 3 4 5 6 7 8 9	YES	STANDARD	NATURAL

10 CIRCUIT

MOLEX PART NO.	HOUSING PART NO.	BLOCKED POSITION KEYS	TERMINAL VOID POSITION	CONFIGURATION	LATCH	CCT 1 LOCATION	HOUSING COLOUR
93070-3501	91698-3501	NONE	NONE	1 2 3 4 5 6 7 8 9 10	YES	STANDARD	NATURAL
93070-3502	91698-3501	NONE	CCT 2, 5, 7, 9	1 2 3 4 5 6 7 8 9 10	YES	STANDARD	NATURAL
93070-3503	91698-3504	a b d e f g i j	NONE	a b d e f g i j / 1 2 3 4 5 6 7 8 9 10	YES	STANDARD	NATURAL
93070-3504	91698-3501	NONE	CCT 2, 6, 9	1 2 3 4 5 6 7 8 9 10	YES	STANDARD	NATURAL
93070-3505	91698-3504	a b d e f g i j	CCT 5, 6	a b d e f g i j / 1 2 3 4 5 6 7 8 9 10	YES	STANDARD	NATURAL

B4

9 CIRCUIT WITHOUT PEG OPTION (CUSTOMIZED PART)

MOLEX PART NO.	HOUSING PART NO.	BLOCKED POSITION KEYS	TERMINAL VOID POSITION	CONFIGURATION	LATCH	CCT 1 LOCATION	HOUSING COLOUR
93070-3007	91698-3011	NONE	NONE	1 2 3 4 5 6 7 8 9	YES	STANDARD	NATURAL

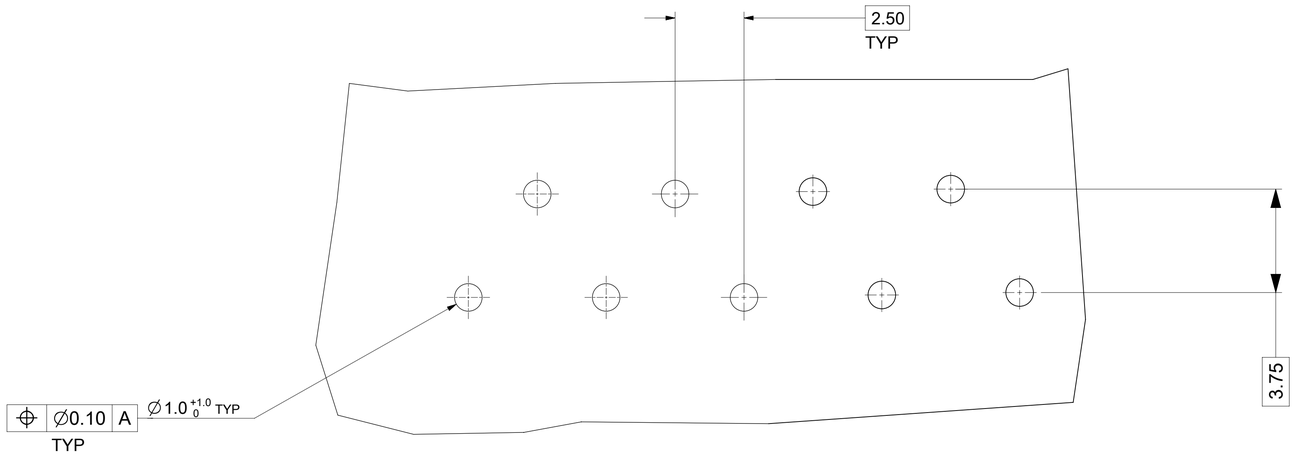

RECOMMENDED PCB LAYOUT FOR P/N: 93070-3007

THIS DRAWING CONTAINS INFORMATION THAT IS PROPRIETARY TO MOLEX ELECTRONIC TECHNOLOGIES, LLC AND SHOULD NOT BE USED WITHOUT WRITTEN PERMISSION

DIMENSION UNITS	mm
SCALE	1:1
GENERAL TOLERANCES (UNLESS SPECIFIED)	
ANGULAR TOL	± 2.0 °
4 PLACES	±
3 PLACES	± 0.05
2 PLACES	± 0.1
1 PLACE	± 0.2
0 PLACES	±
DRAFT WHERE APPLICABLE MUST REMAIN WITHIN DIMENSIONS	

CURRENT REV DESC:

EC NO: 831787
DRWN: PRAMOD 2025/08/18
CHK'D: GANESY 2025/08/19
APPR: GANESY 2025/08/19

INITIAL REVISION:
DRWN: CRAODOREMS 2017/09/28
APPR: BRUTTLE 2018/03/20

THIRD ANGLE PROJECTION | DRAWING: A1-SIZE | SERIES: 93070

molex

RAST 2.5 APPLI-MATE
VERTICAL MALE HEADER 2.5 PITCH

PRODUCT CUSTOMER DRAWING

DOCUMENT NUMBER	DOC TYPE	DOC PART	REVISION
930700001	PSD	000	B4

MATERIAL NUMBER	CUSTOMER	SHEET NUMBER
SEE SHEETS 2-7	GENERAL MARKET	7 OF 8

DOCUMENT STATUS	P1	RELEASE DATE	2025/08/19 05:38:43

11 CIRCUIT

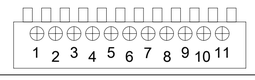

MOLEX PART NO.	HOUSING PART NO.	BLOCKED POSITION KEYS	TERMINAL VOID POSITION	CONFIGURATION	LATCH	CCT 1 LOCATION	HOUSING COLOUR
93070-4001	91698-4001	NONE	NONE	1 2 3 4 5 6 7 8 9 10 11	YES	STANDARD	NATURAL
93070-4002	91698-4001	NONE	CCT 4,8	1 2 3 4 5 6 7 8 9 10 11	YES	STANDARD	NATURAL
93070-4003	91698-4001	NONE	CCT 5,6	1 2 3 4 5 6 7 8 9 10 11	YES	STANDARD	NATURAL
93070-4004	91698-4001	NONE	CCT 6,7	1 2 3 4 5 6 7 8 9 10 11	YES	STANDARD	NATURAL

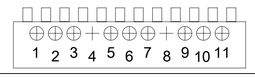

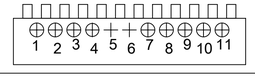

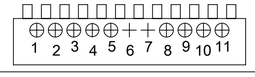

12 CIRCUIT

MOLEX PART NO.	HOUSING PART NO.	BLOCKED POSITION KEYS	TERMINAL VOID POSITION	CONFIGURATION	LATCH	CCT 1 LOCATION	HOUSING COLOUR
93070-4501	91698-4501	NONE	NONE	1 2 3 4 5 6 7 8 9 10 11 12	YES	STANDARD	NATURAL
93070-4502	91698-4501	NONE	CCT 2, 5, 8, 11	1 2 3 4 5 6 7 8 9 10 11 12	YES	STANDARD	NATURAL
93070-4503	91698-4501	NONE	CCT 5, 6	1 2 3 4 5 6 7 8 9 10 11 12	YES	STANDARD	NATURAL

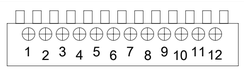

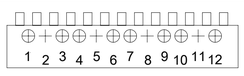

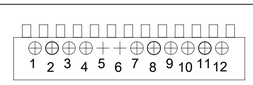

13 CIRCUIT

MOLEX PART NO.	HOUSING PART NO.	BLOCKED POSITION KEYS	TERMINAL VOID POSITION	CONFIGURATION	LATCH	CCT 1 LOCATION	HOUSING COLOUR
93070-5001	91698-5001	NONE	NONE	1 2 3 4 5 6 7 8 9 10 11 12 13	YES	STANDARD	NATURAL
93070-5002	91698-5001	NONE	CCT 4, 6, 8, 10, 12	1 2 3 4 5 6 7 8 9 10 11 12 13	YES	STANDARD	NATURAL

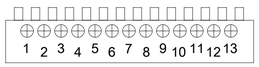

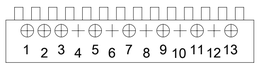

14 CIRCUIT

MOLEX PART NO.	HOUSING PART NO.	BLOCKED POSITION KEYS	TERMINAL VOID POSITION	CONFIGURATION	LATCH	CCT 1 LOCATION	HOUSING COLOUR
93070-5501	91698-5501	NONE	NONE	1 2 3 4 5 6 7 8 9 10 11 12 13 14	YES	STANDARD	NATURAL

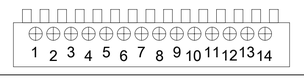

15 CIRCUIT

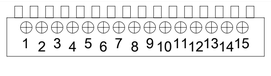

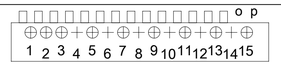

MOLEX PART NO.	HOUSING PART NO.	BLOCKED POSITION KEYS	TERMINAL VOID POSITION	CONFIGURATION	LATCH	CCT 1 LOCATION	HOUSING COLOUR
93070-6001	91698-6001	NONE	NONE	1 2 3 4 5 6 7 8 9 10 11 12 13 14 15	YES	STANDARD	NATURAL
93070-6002	91698-6003	o p	CCT 4, 6, 8, 10, 12, 14	o p 1 2 3 4 5 6 7 8 9 10 11 12 13 14 15	YES	STANDARD	NATURAL
93070-6003	91698-6002	a d g i j n o p	NONE	a d g i j n o p 1 2 3 4 5 6 7 8 9 10 11 12 13 14 15	YES	STANDARD	NATURAL

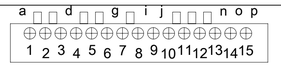

NOTES:

1. + DENOTES TERMINAL VOIDED POSITION.

⊕ DENOTES TERMINAL LOADED POSITION.

THIS DRAWING CONTAINS INFORMATION THAT IS PROPRIETARY TO MOLEX ELECTRONIC TECHNOLOGIES, LLC AND SHOULD NOT BE USED WITHOUT WRITTEN PERMISSION

DIMENSION UNITS	SCALE
mm	1:1

GENERAL TOLERANCES (UNLESS SPECIFIED)

ANGULAR TOL	±	2.0 °
4 PLACES	±	
3 PLACES	±	0.05
2 PLACES	±	0.1
1 PLACE	±	0.2
0 PLACES	±	

DRAFT WHERE APPLICABLE MUST REMAIN WITHIN DIMENSIONS

CURRENT REV DESC:

EC NO: 831787
DRWN: PRAMOD 2025/08/18
CHK'D: GANESY 2025/08/19
APPR: GANESY 2025/08/19

INITIAL REVISION:
DRWN: CRAODOREMS 2017/09/28
APPR: BRUTTLE 2018/03/20

THIRD ANGLE PROJECTION | DRAWING: A1-SIZE | SERIES: 93070

molex

RAST 2.5 APPLI-MATE
VERTICAL MALE HEADER 2.5 PITCH

PRODUCT CUSTOMER DRAWING

DOCUMENT NUMBER	DOC TYPE	DOC PART	REVISION
930700001	PSD	000	B4

MATERIAL NUMBER	CUSTOMER	SHEET NUMBER
SEE SHEETS 2-7	GENERAL MARKET	8 OF 8

DOCUMENT STATUS	P1	RELEASE DATE	2025/08/19 05:38:43