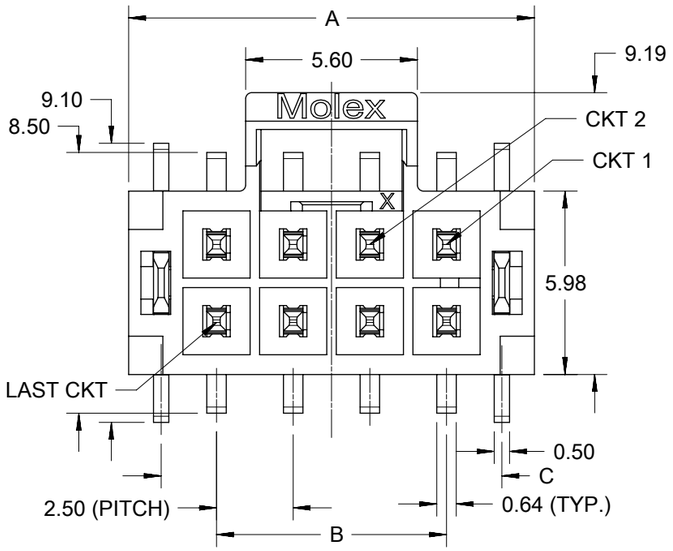


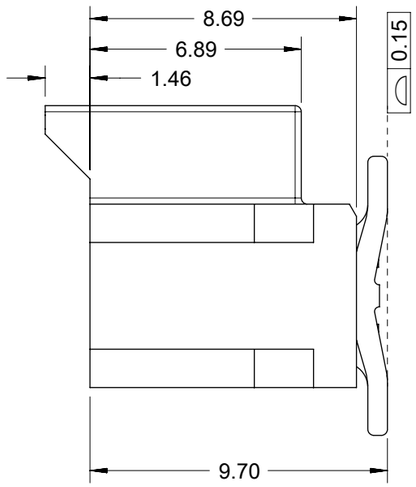


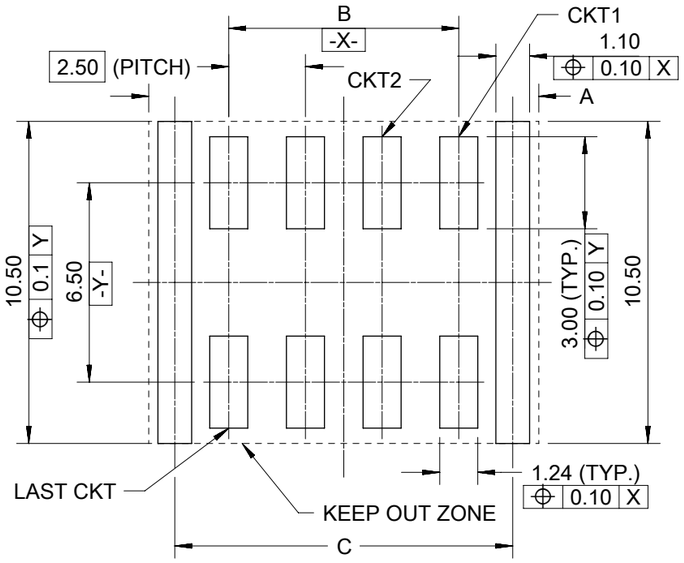


RECOMMENDED PCB LAYOUT(CONNECTOR SIDE VIEW)
THICKNESS=1.6mm MIN. TOLERANCE:±0.05

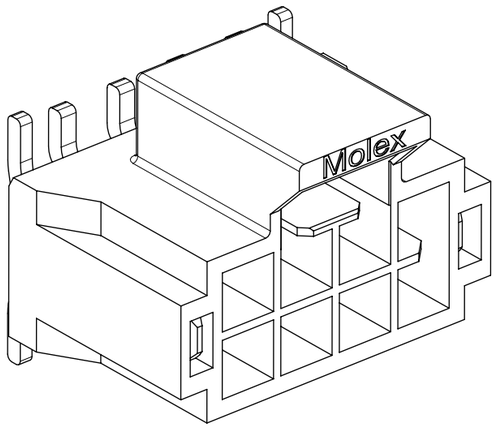


WITHOUT MYLAR

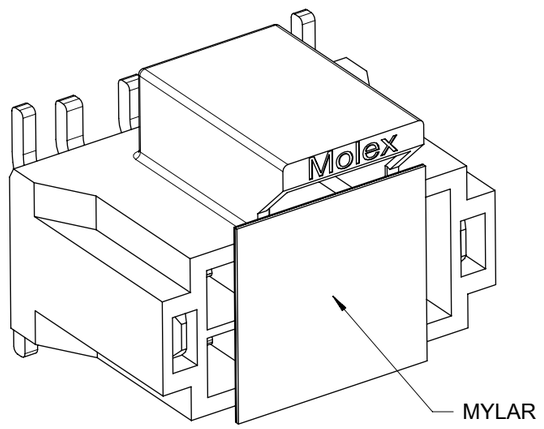


WITH MYLAR
DELIVER TO CUSTOMER

THIS DRAWING CONTAINS INFORMATION THAT IS PROPRIETARY TO MOLEX ELECTRONIC TECHNOLOGIES, LLC AND SHOULD NOT BE USED WITHOUT WRITTEN PERMISSION

| DIMENSION UNITS | SCALE |
|---|---|
| mm | NTS |

GENERAL TOLERANCES (UNLESS SPECIFIED)

| | | |
|---|---|---|
| ANGULAR TOL | ± | 3.0 ° |
| 4 PLACES | ± | |
| 3 PLACES | ± | |
| 2 PLACES | ± | 0.2 |
| 1 PLACE | ± | 0.3 |
| 0 PLACES | ± | |

DRAFT WHERE APPLICABLE MUST REMAIN WITHIN DIMENSIONS

CURRENT REV DESC:

EC NO: 826596
DRWN: GLLI 2025/04/28
CHK'D: XQZHANG 2025/06/26
APPR: XQZHANG 2025/06/26

INITIAL REVISION:
DRWN: WJHUO 2014/12/17
APPR: AYIN 2015/03/12

molex

SD DRAWING FOR
NANO-FIT HEADER OF SMT VERTICAL DUAL

PRODUCT CUSTOMER DRAWING

| DOCUMENT NUMBER | DOC TYPE | DOC PART | REVISION |
|---|---|---|---|
| SD-105429-001 | PSD | 000 | D1 |

| THIRD ANGLE PROJECTION | DRAWING | SERIES | MATERIAL NUMBER | CUSTOMER | SHEET NUMBER |
|---|---|---|---|---|---|
| | A3-SIZE | 105429 | SEE TABLE | GENERAL MARKET | 1 OF 4 |

| DOCUMENT STATUS | P1 | RELEASE DATE | 2025/06/26 09:45:50 |
|---|---|---|---|

FORMAT: master-tb-prod-A3
REVISION: J1
DATE: 2021/05/01

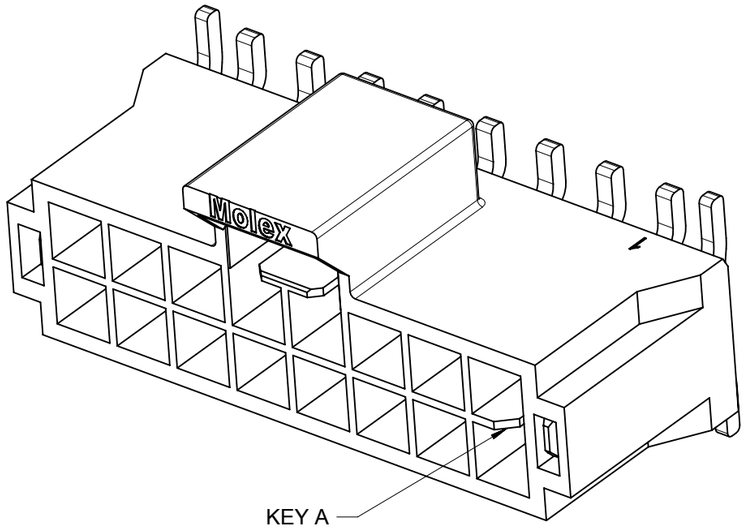


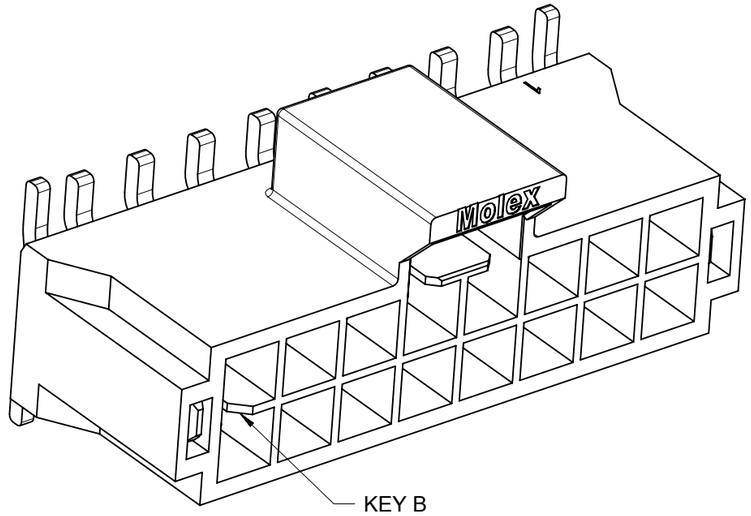


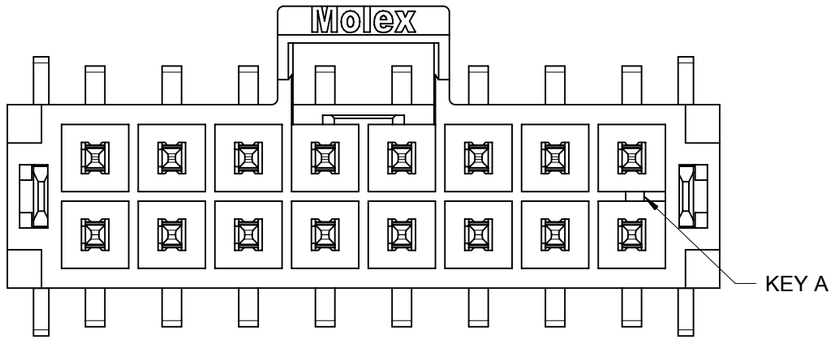


BLACK

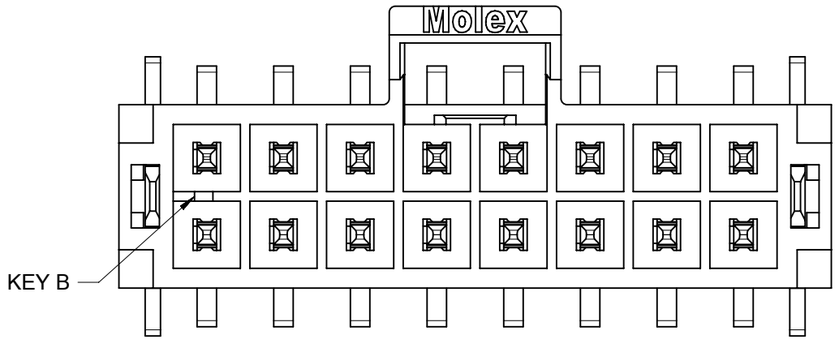


NATURAL

COLOR OPTION

THIS DRAWING CONTAINS INFORMATION THAT IS PROPRIETARY TO MOLEX ELECTRONIC TECHNOLOGIES, LLC AND SHOULD NOT BE USED WITHOUT WRITTEN PERMISSION

| DIMENSION UNITS | SCALE |
|---|---|
| mm | NTS |

GENERAL TOLERANCES (UNLESS SPECIFIED)

| | | |
|---|---|---|
| ANGULAR TOL | ± | 3.0 ° |
| 4 PLACES | ± | |
| 3 PLACES | ± | |
| 2 PLACES | ± | 0.2 |
| 1 PLACE | ± | 0.3 |
| 0 PLACES | ± | |

DRAFT WHERE APPLICABLE MUST REMAIN WITHIN DIMENSIONS

CURRENT REV DESC:

EC NO: 826596
DRWN: GLLI 2025/04/28
CHK'D: XQZHANG 2025/06/26
APPR: XQZHANG 2025/06/26

INITIAL REVISION:
DRWN: WJHUO 2014/12/17
APPR: AYIN 2015/03/12

THIRD ANGLE PROJECTION | DRAWING: A3-SIZE | SERIES: 105429

molex

SD DRAWING FOR
NANO-FIT HEADER OF SMT VERTICAL DUAL

PRODUCT CUSTOMER DRAWING

| DOCUMENT NUMBER | DOC TYPE | DOC PART | REVISION |
|---|---|---|---|
| SD-105429-001 | PSD | 000 | D1 |

| MATERIAL NUMBER | CUSTOMER | SHEET NUMBER |
|---|---|---|
| | GENERAL MARKET | 2 OF 4 |

| DOCUMENT STATUS | P1 | RELEASE DATE | 2025/06/26 09:45:50 |
|---|---|---|---|

FORMAT: master-lb-prod-A3
REVISION: J1
DATE: 2021/05/01

| PART NUMBER | DIM. A | DIM. B | DIM. C | CKT SIZE | PLATING | LUBE |
|---|---|---|---|---|---|---|
| 105429-1104 | 8.23 | 2.50 | 6.11 | 4 | TIN | NO |
| 105429-1106 | 10.73 | 5.00 | 8.61 | 6 | | |
| 105429-1108 | 13.23 | 7.50 | 11.11 | 8 | | |
| 105429-1110 | 15.73 | 10.00 | 13.61 | 10 | | |
| 105429-1112 | 18.23 | 12.50 | 16.11 | 12 | | |
| 105429-1114 | 20.73 | 15.00 | 18.61 | 14 | | |
| 105429-1116 | 23.23 | 17.50 | 21.11 | 16 | | |
| 105429-1204 | 8.23 | 2.50 | 6.11 | 4 | GOLD 0.38 | |
| 105429-1206 | 10.73 | 5.00 | 8.61 | 6 | | |
| 105429-1208 | 13.23 | 7.50 | 11.11 | 8 | | |
| 105429-1210 | 15.73 | 10.00 | 13.61 | 10 | | |
| 105429-1212 | 18.23 | 12.50 | 16.11 | 12 | | |
| 105429-1214 | 20.73 | 15.00 | 18.61 | 14 | | |
| 105429-1216 | 23.23 | 17.50 | 21.11 | 16 | | |
| 105429-1304 | 8.23 | 2.50 | 6.11 | 4 | GOLD 0.76 | |
| 105429-1306 | 10.73 | 5.00 | 8.61 | 6 | | |
| 105429-1308 | 13.23 | 7.50 | 11.11 | 8 | | |
| 105429-1310 | 15.73 | 10.00 | 13.61 | 10 | | |
| 105429-1312 | 18.23 | 12.50 | 16.11 | 12 | | |
| 105429-1314 | 20.73 | 15.00 | 18.61 | 14 | | |
| 105429-1316 | 23.23 | 17.50 | 21.11 | 16 | | |
| 105429-1404 | 8.23 | 2.50 | 6.11 | 4 | GOLD 0.76 | YES |
| 105429-1406 | 10.73 | 5.00 | 8.61 | 6 | | |
| 105429-1408 | 13.23 | 7.50 | 11.11 | 8 | | |
| 105429-1410 | 15.73 | 10.00 | 13.61 | 10 | | |
| 105429-1412 | 18.23 | 12.50 | 16.11 | 12 | | |
| 105429-1414 | 20.73 | 15.00 | 18.61 | 14 | | |
| 105429-1416 | 23.23 | 17.50 | 21.11 | 16 | | |

COLOR: BLACK

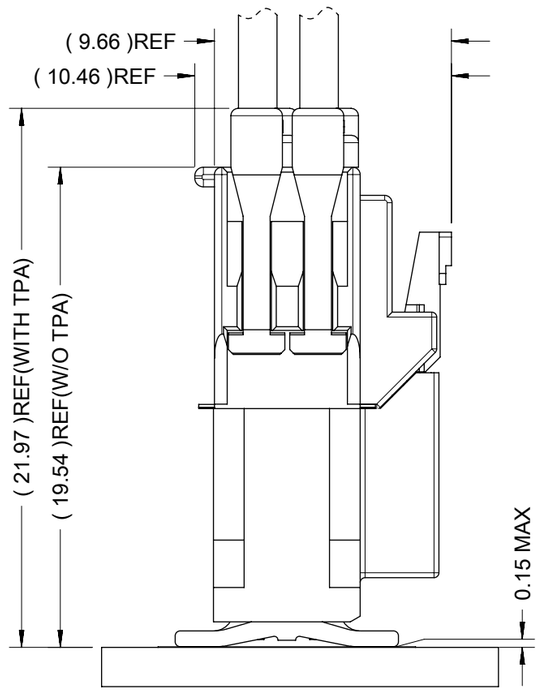


COPLANARITY DETAIL
(SEE NOTE #8)

| PART NUMBER | DIM. A | DIM. B | DIM. C | CKT SIZE | PLATING | LUBE |
|---|---|---|---|---|---|---|
| 105429-2104 | 8.23 | 2.50 | 6.11 | 4 | TIN | NO |
| 105429-2106 | 10.73 | 5.00 | 8.61 | 6 | | |
| 105429-2108 | 13.23 | 7.50 | 11.11 | 8 | | |
| 105429-2110 | 15.73 | 10.00 | 13.61 | 10 | | |
| 105429-2112 | 18.23 | 12.50 | 16.11 | 12 | | |
| 105429-2114 | 20.73 | 15.00 | 18.61 | 14 | | |
| 105429-2116 | 23.23 | 17.50 | 21.11 | 16 | | |
| 105429-2204 | 8.23 | 2.50 | 6.11 | 4 | GOLD 0.38 | |
| 105429-2206 | 10.73 | 5.00 | 8.61 | 6 | | |
| 105429-2208 | 13.23 | 7.50 | 11.11 | 8 | | |
| 105429-2210 | 15.73 | 10.00 | 13.61 | 10 | | |
| 105429-2212 | 18.23 | 12.50 | 16.11 | 12 | | |
| 105429-2214 | 20.73 | 15.00 | 18.61 | 14 | | |
| 105429-2216 | 23.23 | 17.50 | 21.11 | 16 | | |
| 105429-2304 | 8.23 | 2.50 | 6.11 | 4 | GOLD 0.76 | |
| 105429-2306 | 10.73 | 5.00 | 8.61 | 6 | | |
| 105429-2308 | 13.23 | 7.50 | 11.11 | 8 | | |
| 105429-2310 | 15.73 | 10.00 | 13.61 | 10 | | |
| 105429-2312 | 18.23 | 12.50 | 16.11 | 12 | | |
| 105429-2314 | 20.73 | 15.00 | 18.61 | 14 | | |
| 105429-2316 | 23.23 | 17.50 | 21.11 | 16 | | |
| 105429-2404 | 8.23 | 2.50 | 6.11 | 4 | GOLD 0.76 | YES |
| 105429-2406 | 10.73 | 5.00 | 8.61 | 6 | | |
| 105429-2408 | 13.23 | 7.50 | 11.11 | 8 | | |
| 105429-2410 | 15.73 | 10.00 | 13.61 | 10 | | |
| 105429-2412 | 18.23 | 12.50 | 16.11 | 12 | | |
| 105429-2414 | 20.73 | 15.00 | 18.61 | 14 | | |
| 105429-2416 | 23.23 | 17.50 | 21.11 | 16 | | |

COLOR: NATURAL

## NOTES FOR ALL PARTS

1> MATERIAL:
HOUSING: LCP, UL 94V-0.
TERMINAL: BRASS.
SOLDER CLIP: BRASS.
2> PLATING FINISHED:
TERMINAL:
CONTACT AREA:
a. REFLOWED MATTE TIN 0.76 MICRONS MIN; b. GOLD 0.38 MICRONS MIN; c. GOLD 0.76 MICRONS MIN.
SOLDER AREA: TIN 0.76 MICRONS MINIMUM.
UNDER PALTING NICKEL 1.25 MICRONS MINIMUM.
SOLDER CLIP: TIN 2.5 MICRONS MINIMUM; UNDER PLATING NICKEL 1.25 MICRONS MINIMUM.

3> PRODUCT SPECIFICATION: PS-105405-001.
4> PACKAGE: TAPE REEL, DETAILS REFER TO DRAWING 1054291000-PK.
5> PRODUCT MATE WITH SERIES OF 105308 AND 226362(RECEPTACLE).
6> PARTS CONFORM TO CLASS 'B' REQUIREMENTS OF COSMETIC SPECIFICATION PS-45499-002.
7> THE COPLANARITY DIMENSION IS ESTABLISHED BY PLACING THE ASSEMBLY ON A FLAT SURFACE. THE DISTANCE FROM THAT SURFACE TO THE BOTTOM OF ANY TERMINAL OR NAIL MUST NOT EXCEED 0.15MM.

THIS DRAWING CONTAINS INFORMATION THAT IS PROPRIETARY TO MOLEX ELECTRONIC TECHNOLOGIES, LLC AND SHOULD NOT BE USED WITHOUT WRITTEN PERMISSION

| DIMENSION UNITS | SCALE |
|---|---|
| mm | NTS |

GENERAL TOLERANCES (UNLESS SPECIFIED)

| | |
|---|---|
| ANGULAR TOL | ± 3.0 ° |
| 4 PLACES | ± |
| 3 PLACES | ± |
| 2 PLACES | ± 0.2 |
| 1 PLACE | ± 0.3 |
| 0 PLACES | ± |

DRAFT WHERE APPLICABLE MUST REMAIN WITHIN DIMENSIONS

CURRENT REV DESC:

EC NO: 826596
DRWN: GLLI 2025/04/28
CHK'D: XQZHANG 2025/06/26
APPR: XQZHANG 2025/06/26

INITIAL REVISION:
DRWN: WJHUO 2014/12/17
APPR: AYIN 2015/03/12

molex

SD DRAWING FOR
NANO-FIT HEADER OF SMT VERTICAL DUAL

PRODUCT CUSTOMER DRAWING

| DOCUMENT NUMBER | DOC TYPE | DOC PART | REVISION |
|---|---|---|---|
| SD-105429-001 | PSD | 000 | D1 |

| THIRD ANGLE PROJECTION | DRAWING | SERIES | MATERIAL NUMBER | CUSTOMER | SHEET NUMBER |
|---|---|---|---|---|---|
| | A3-SIZE | 105429 | SEE TABLE | GENERAL MARKET | 3 OF 4 |

| DOCUMENT STATUS | P1 | RELEASE DATE | 2025/06/26 09:45:50 |
|---|---|---|---|

FORMAT: master-tb-prod-A3
REVISION: J1
DATE: 2021/05/01

| | 4 CKT | 6 CKT | 8 CKT | 10 CKT |
|---|---|---|---|---|
| BLACK | 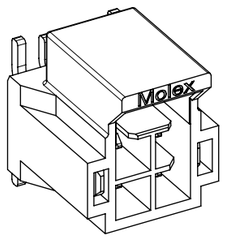 | 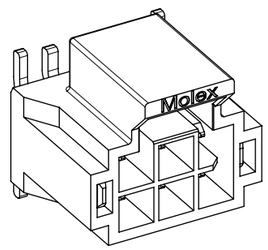 | 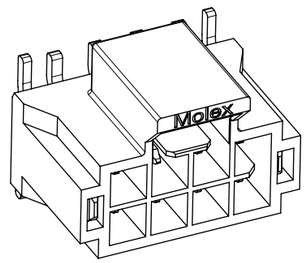 | 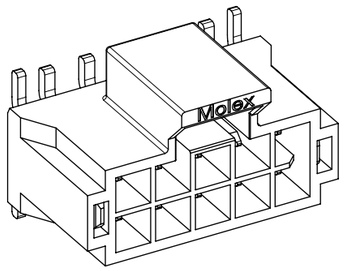 |
| NATURAL | 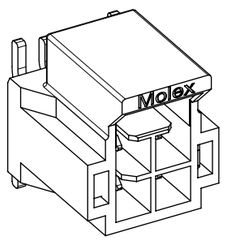 | 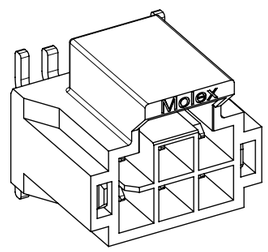 | 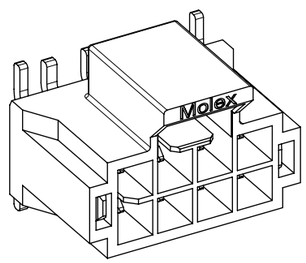 | 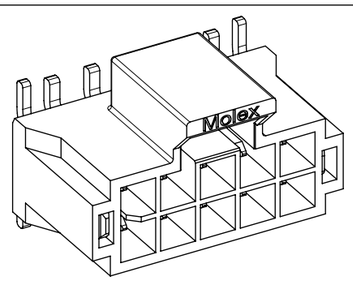 |

| | 12 CKT | 14 CKT | 16 CKT |
|---|---|---|---|
| BLACK | 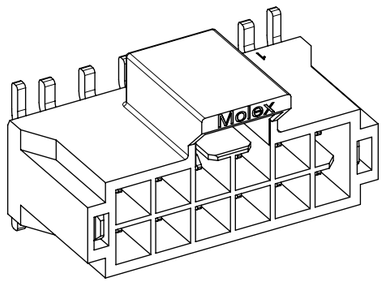 | 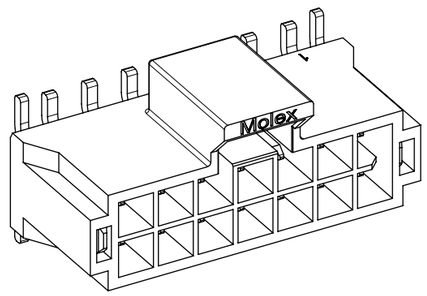 | 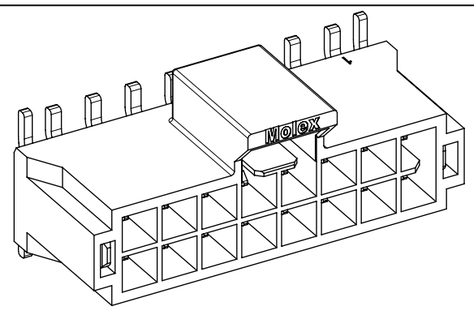 |
| NATURAL | 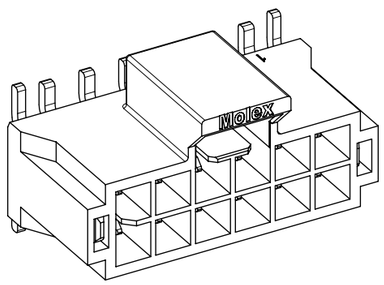 | 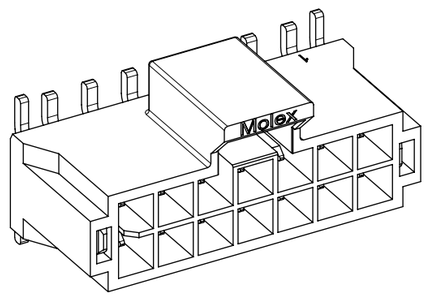 | 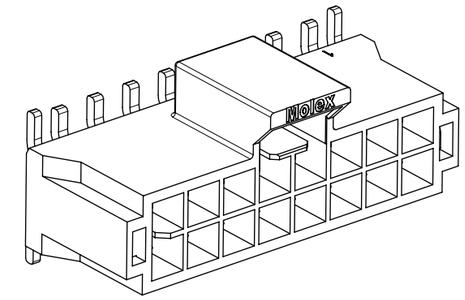 |

THIS DRAWING CONTAINS INFORMATION THAT IS PROPRIETARY TO MOLEX ELECTRONIC TECHNOLOGIES, LLC AND SHOULD NOT BE USED WITHOUT WRITTEN PERMISSION

| DIMENSION UNITS | SCALE |
|---|---|
| mm | NTS |

GENERAL TOLERANCES (UNLESS SPECIFIED)

| | | |
|---|---|---|
| ANGULAR TOL | ± | 3.0 ° |
| 4 PLACES | ± | |
| 3 PLACES | ± | |
| 2 PLACES | ± | 0.2 |
| 1 PLACE | ± | 0.3 |
| 0 PLACES | ± | |

DRAFT WHERE APPLICABLE MUST REMAIN WITHIN DIMENSIONS

CURRENT REV DESC:

EC NO: 826596
DRWN: GLLI 2025/04/28
CHK'D: XQZHANG 2025/06/26
APPR: XQZHANG 2025/06/26

INITIAL REVISION:
DRWN: WJHUO 2014/12/17
APPR: AYIN 2015/03/12

THIRD ANGLE PROJECTION | DRAWING: A3-SIZE | SERIES: 105429

molex

SD DRAWING FOR
NANO-FIT HEADER OF SMT VERTICAL DUAL

PRODUCT CUSTOMER DRAWING

| DOCUMENT NUMBER | DOC TYPE | DOC PART | REVISION |
|---|---|---|---|
| SD-105429-001 | PSD | 000 | D1 |

| MATERIAL NUMBER | CUSTOMER | SHEET NUMBER |
|---|---|---|
| | GENERAL MARKET | 4 OF 4 |

| DOCUMENT STATUS | P1 | RELEASE DATE | 2025/06/26 09:45:50 |
|---|---|---|---|

FORMAT: master-tb-prod-A3
REVISION: J1
DATE: 2021/05/01