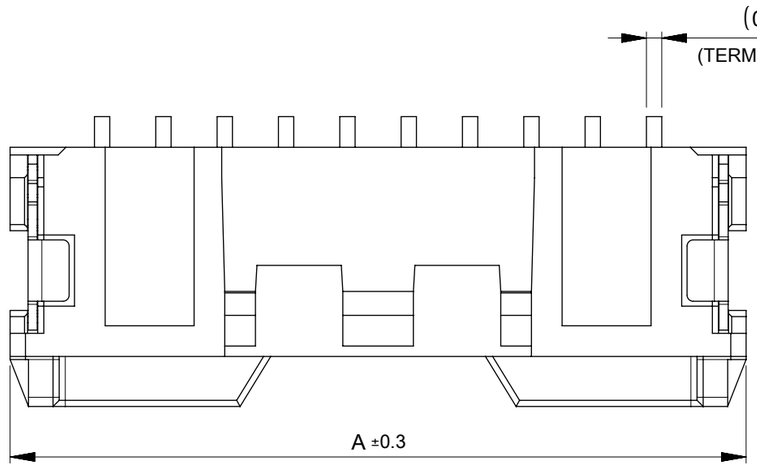

NOTES

1. 材質及び仕上げ(めっき仕様) : TABLE 1, TABLE 2 参照
   MATERIAL AND FINISHES (PLATING SPECIFICATION) : SEE TABLE 1 AND TABLE 2
2. 適合嵌合相手 : 505570シリーズ
   MATE WITH : 505570 SERIES
3. 端子テール部及びネイルの平坦度 : 0.1mm以下
   TAIL AND NAIL COPLANARITY TO BE 0.1mm MAXIMUM.
4. 偶数極に適用
   APPLY TO EVEN CIRCUIT
5. 製品仕様書 : 5055700001-PS PS 000
   PRODUCT SPECIFICATION : 5055700001-PS PS 000
6. コネクタ取扱説明書 : 5055700001 PS A03
   APPLICATION SPECIFICATION : 5055700001 PS A03
7. 本製品は錫めっき品である。
   金めっき品は5055780002-SD PSD 000をご参照下さい。
   THIS IS TIN PLATING PRODUCT.
   PLEASE REFER TO 5055780002-SD PSD 000 FOR GOLD PLATING PRODUCT.
8. 発注番号
   ORDER NUMBER

505578**7*

極数
CIRCUIT SIZE

番号 NO.	ハウジングカラー HOUSING COLOR
0	ナチュラル(白) NATURAL(WHITE)
1	黒 BLACK

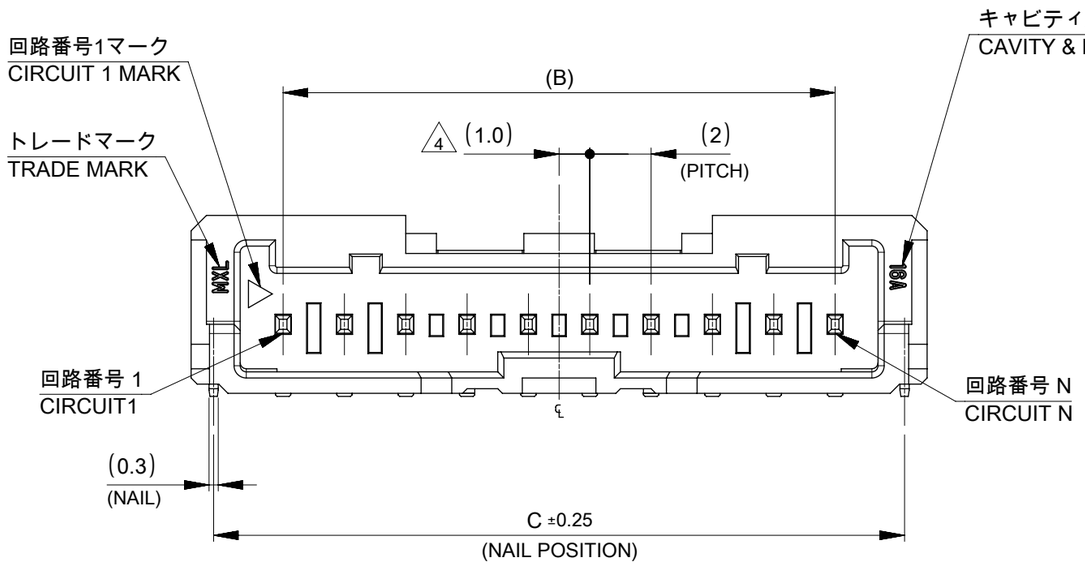

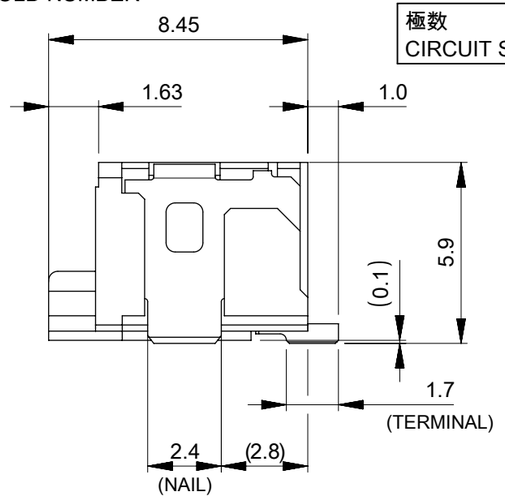

			BLACK	NATURAL(WHITE)	HOUSING COLOR
34.53	30	36	5055781671	5055781670	16
32.53	28	34	5055781571	5055781570	15
30.53	26	32	5055781471	5055781470	14
28.53	24	30	5055781371	5055781370	13
26.53	22	28	5055781271	5055781270	12
24.53	20	26	5055781171	5055781170	11
22.53	18	24	5055781071	5055781070	10
20.53	16	22	5055780971	5055780970	9
18.53	14	20	5055780871	5055780870	8
16.53	12	18	5055780771	5055780770	7
14.53	10	16	5055780671	5055780670	6
12.53	8	14	5055780571	5055780570	5
10.53	6	12	5055780471	5055780470	4
8.53	4	10	5055780371	5055780370	3
6.53	2	8	5055780271	5055780270	2
C	B	A	8 発注番号 ORDER NUMBER		極数 CIRCUIT SIZE
			エンボステープ梱包 PACKAGING STYLE : EMBOSSED TAPE AND REEL		

1 TABLE 1

番号 NO.	部品 PART	材質 MATERIAL
①	ハウジング HOUSING	ポリアミド(PA), UL94 V-0, 色 : 注記8参照 POLYAMIDE(PA), UL94 V-0, COLOR: SEE NOTE 8
②	ターミナル TERMINAL	黄銅 BRASS
		錫めっき : 1.0 MICROMETER MINIMUM MATTE TIN PLATING
		ニッケルめっき (下地めっき) : 1.0 MICROMETER MINIMUM NICKEL PLATING (UNDER PLATING)
③	ネイル NAIL	リン青銅 PHOSPHOR BRONZE
		錫めっき : 1.0 MICROMETER MINIMUM MATTE TIN PLATING
		ニッケルめっき (下地めっき) : 1.0 MICROMETER MINIMUM NICKEL PLATING (UNDER PLATING)

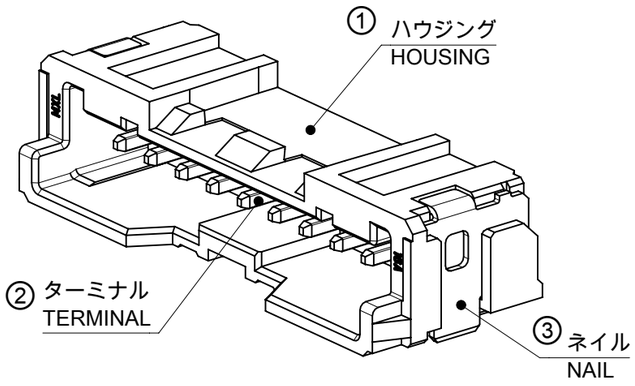

THIS DRAWING CONTAINS INFORMATION THAT IS PROPRIETARY TO MOLEX ELECTRONIC TECHNOLOGIES, LLC AND SHOULD NOT BE USED WITHOUT WRITTEN PERMISSION

DIMENSION UNITS	mm
SCALE	NTS
GENERAL TOLERANCES (UNLESS SPECIFIED)	
ANGULAR TOL	± 3.0 °
4 PLACES	± 0.2
3 PLACES	± 0.2
2 PLACES	± 0.2
1 PLACE	± 0.2
0 PLACES	± 0.2
DRAFT WHERE APPLICABLE MUST REMAIN WITHIN DIMENSIONS	

CURRENT REV DESC:

EC NO: 718854
DRWN: SOKUMURA01 2023/02/28
CHK'D: SAKIYAMA 2023/08/04
APPR: MARAI 2023/08/04

INITIAL REVISION:
DRWN: TENAGASE 2016/05/12
APPR: TKANEKO 2016/06/23

THIRD ANGLE PROJECTION | DRAWING: A3-SIZE | SERIES: 505578

molex

MICRO-LOCK PLUS 2.0 W/B
SINGLE ROW RIGHT ANGLE SMT PLUG ASSEMBLY
TIN PLATING

PRODUCT CUSTOMER DRAWING

DOCUMENT NUMBER	DOC TYPE	DOC PART	REVISION
5055780001	PSD	000	C

MATERIAL NUMBER	CUSTOMER	SHEET NUMBER
SEE CHART	GENERAL	1 OF 4

DOCUMENT STATUS	P1	RELEASE DATE	2023/08/04 04:04:00

FORMAT: master_B-size-A3
REVISION: J1
DATE: 2021/05/07

製品形状
PRODUCT SHAPE

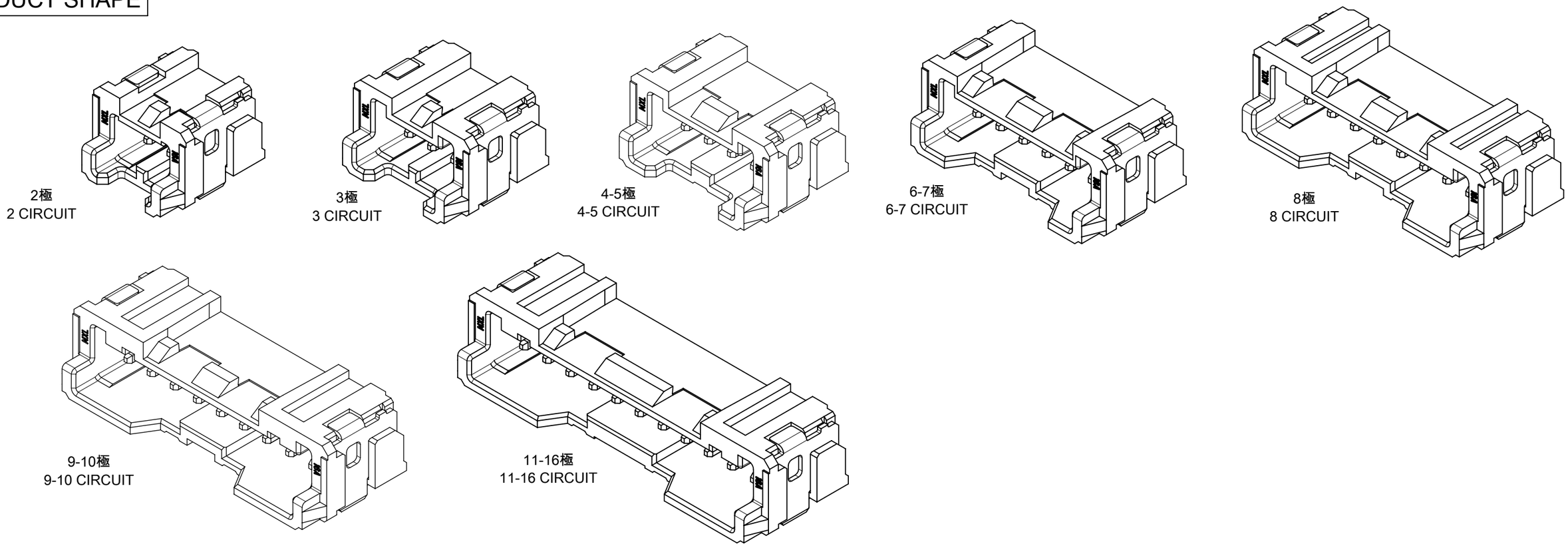

基板パターンレイアウト
PCB PATTERN LAYOUT

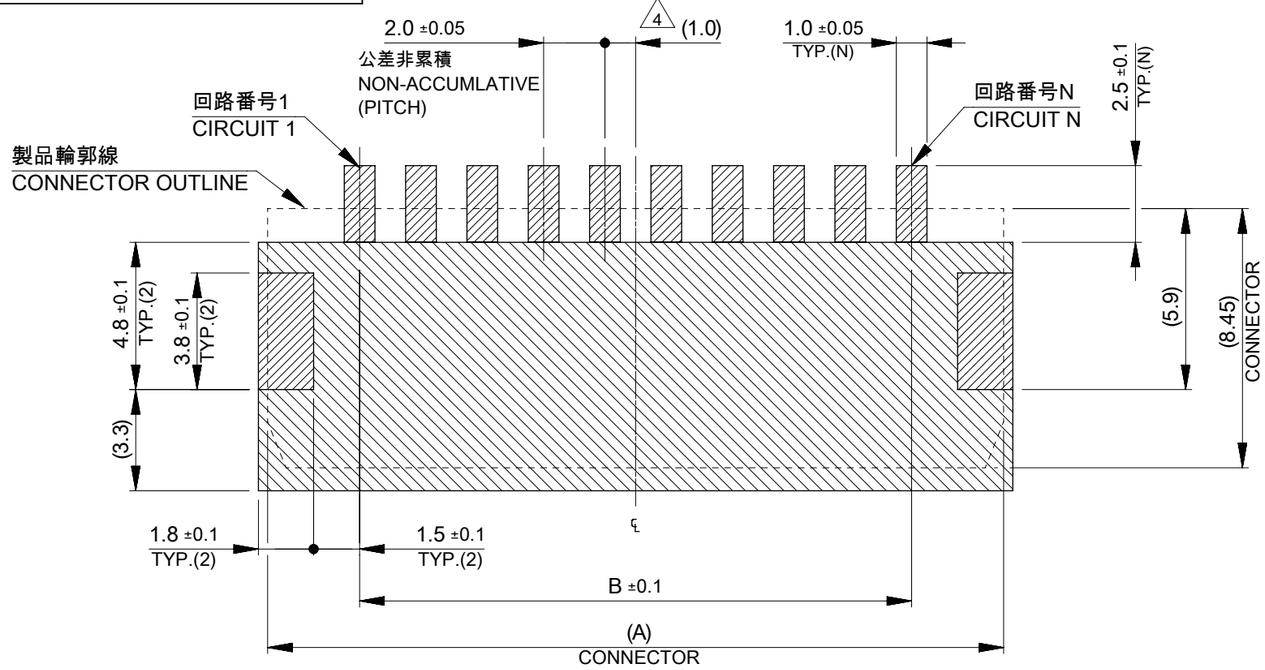

基板パターンレイアウト(参考)
(参考：基板厚1.6mm, メタルマスク厚み0.15mm, マスク開口率100%)
PCB PATTERN LAYOUT (REFERENCE)
(REFERENCE: PCB THICKNESS 1.6mm, STENCIL THICKNESS 0.15mm, APERTURE RATIO 100%)

パターン非推奨エリア
パターンを引き回す際には製品機能に影響がないことを御確認ください。
PATTERN IS NOT RECOMMENDED ON THE HATCHING AREA.
PLEASE CHECK NOT TO HAVE PROBLEM FOR PRODUCT FUNCTION
WHEN SETTING PATTERN ON THE HATCHING AREA.

THIS DRAWING CONTAINS INFORMATION THAT IS PROPRIETARY TO MOLEX ELECTRONIC TECHNOLOGIES, LLC AND SHOULD NOT BE USED WITHOUT WRITTEN PERMISSION

DIMENSION UNITS	SCALE
mm	NTS

GENERAL TOLERANCES (UNLESS SPECIFIED)

ANGULAR TOL	±	3.0 °
4 PLACES	±	0.2
3 PLACES	±	0.2
2 PLACES	±	0.2
1 PLACE	±	0.2
0 PLACES	±	0.2

DRAFT WHERE APPLICABLE MUST REMAIN WITHIN DIMENSIONS

CURRENT REV DESC:

EC NO: 718854
DRWN: SOKUMURA01 2023/02/28
CHK'D: SAKIYAMA 2023/08/04
APPR: MARAI 2023/08/04

INITIAL REVISION:
DRWN: TENAGASE 2016/05/12
APPR: TKANEKO 2016/06/23

THIRD ANGLE PROJECTION

DRAWING	SERIES
A3-SIZE	505578

molex

MICRO-LOCK PLUS 2.0 W/B
SINGLE ROW RIGHT ANGLE SMT PLUG ASSEMBLY
TIN PLATING

PRODUCT CUSTOMER DRAWING

DOCUMENT NUMBER	DOC TYPE	DOC PART	REVISION
5055780001	PSD	000	C

MATERIAL NUMBER	CUSTOMER	SHEET NUMBER
SEE SHEET 1	GENERAL	2 OF 4

DOCUMENT STATUS	P1	RELEASE DATE	2023/08/04	04:04:00

FORMAT: master-tb-mod-A3
REVISION: J1
DATE: 2021/05/01

吸着エリア
SUCTION AREA

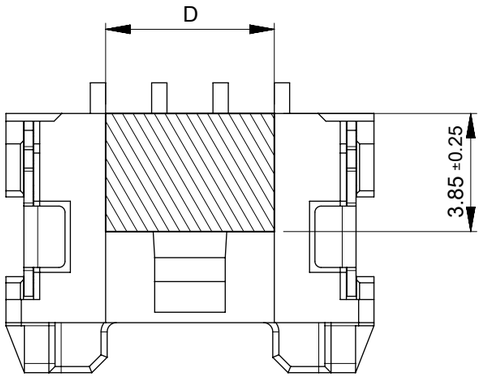

2-5CKT

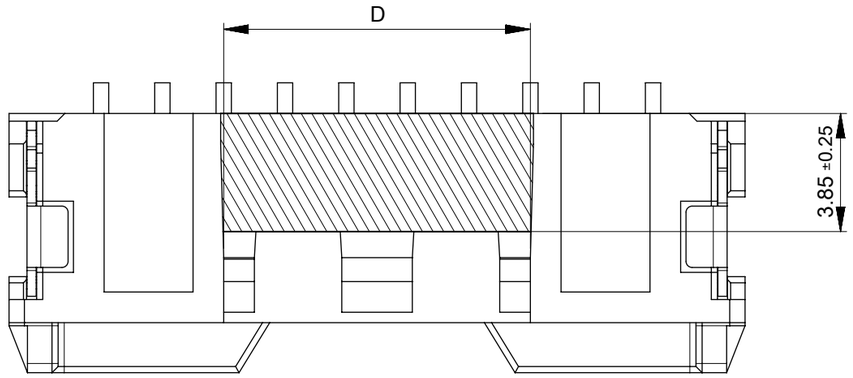

6-16CKT

嵌合状態図
MATED CONNECTORS

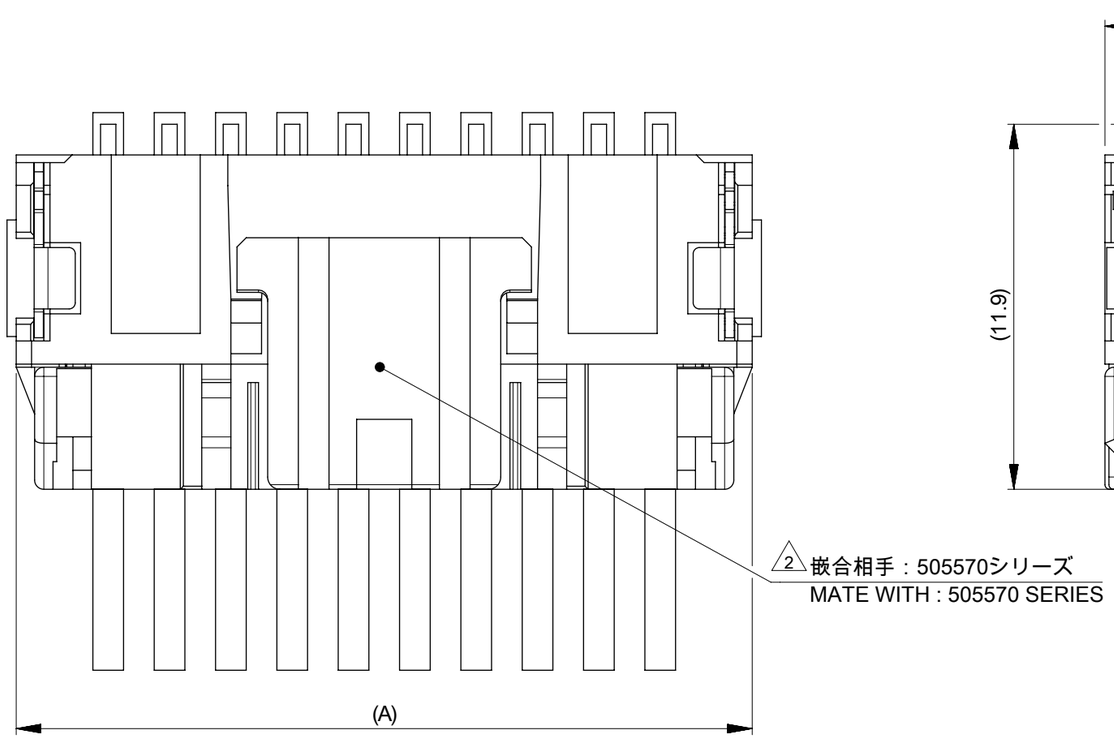

D	極数 CIRCUIT SIZE
14	16
	15
	14
	13
	12
	11
10	10
	9
	8
	7
	6
5.5	5
	4
3.5	3
	2

THIS DRAWING CONTAINS INFORMATION THAT IS PROPRIETARY TO MOLEX ELECTRONIC TECHNOLOGIES, LLC AND SHOULD NOT BE USED WITHOUT WRITTEN PERMISSION

DIMENSION UNITS	SCALE
mm	NTS

GENERAL TOLERANCES (UNLESS SPECIFIED)

ANGULAR TOL	±	3.0 °
4 PLACES	±	0.2
3 PLACES	±	0.2
2 PLACES	±	0.2
1 PLACE	±	0.2
0 PLACES	±	0.2

DRAFT WHERE APPLICABLE MUST REMAIN WITHIN DIMENSIONS

CURRENT REV DESC:

EC NO: 718854
DRWN: SOKUMURA01 2023/02/28
CHK'D: SAKIYAMA 2023/08/04
APPR: MARAI 2023/08/04

INITIAL REVISION:
DRWN: TENAGASE 2016/05/12
APPR: TKANEKO 2016/06/23

molex

MICRO-LOCK PLUS 2.0 W/B
SINGLE ROW RIGHT ANGLE SMT PLUG ASSEMBLY
TIN PLATING

PRODUCT CUSTOMER DRAWING

DOCUMENT NUMBER	DOC TYPE	DOC PART	REVISION
5055780001	PSD	000	C

THIRD ANGLE PROJECTION	DRAWING	SERIES	MATERIAL NUMBER	CUSTOMER	SHEET NUMBER
	A3-SIZE	505578	SEE SHEET 1	GENERAL	3 OF 4

DOCUMENT STATUS	P1	RELEASE DATE	2023/08/04 04:04:00

FORMAT: master_format-A3
REVISION: J1
DATE: 2021/05/07

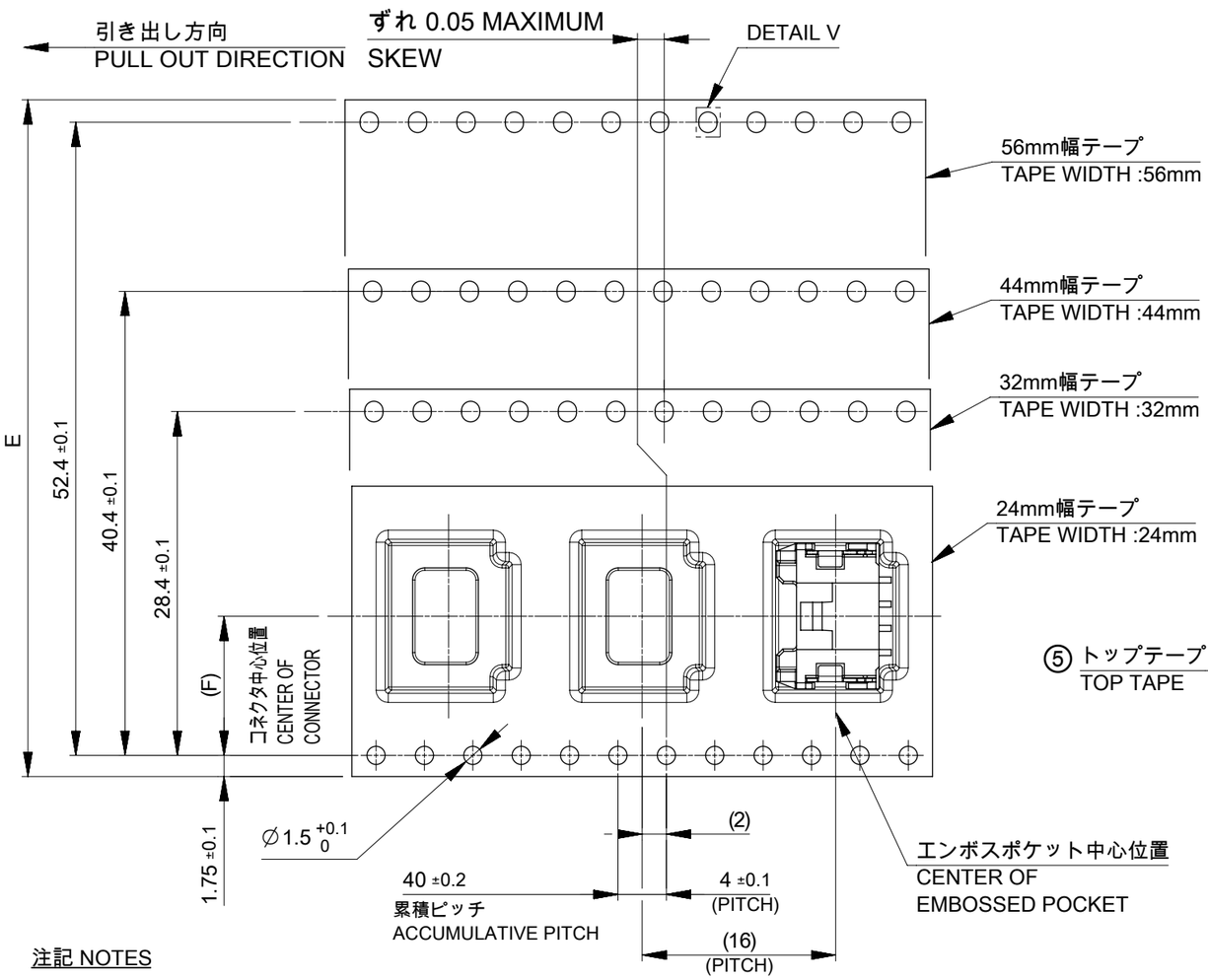

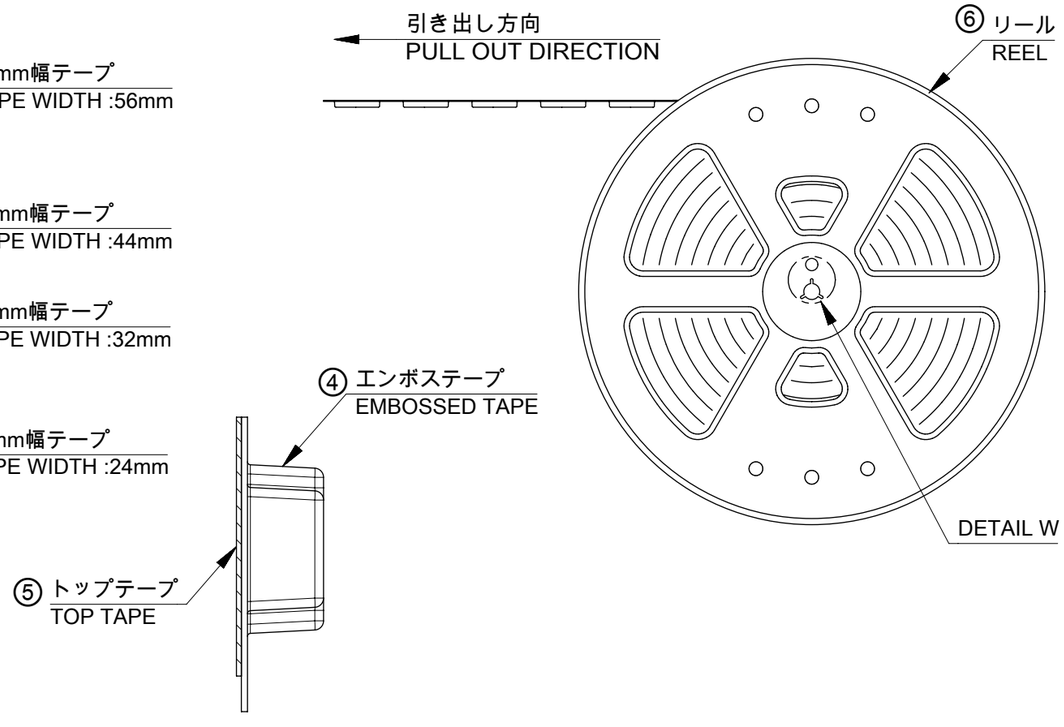

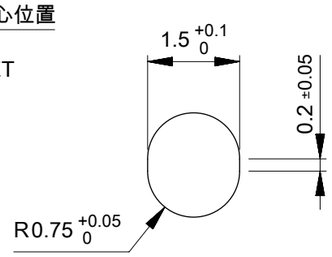

DETAIL V

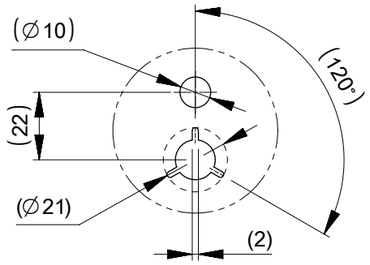

DETAIL W

注記 NOTES

9. 梱包数量：900個
   NUMBER OF CONNECTORS : 900 PIECES/REEL
10. 梱包仕様書：5055789200 PS 200
    PACKING SPECIFICATION : 5055789200 PS 200
11. リードテープ長さ
    LEAD TAPE LENGTH

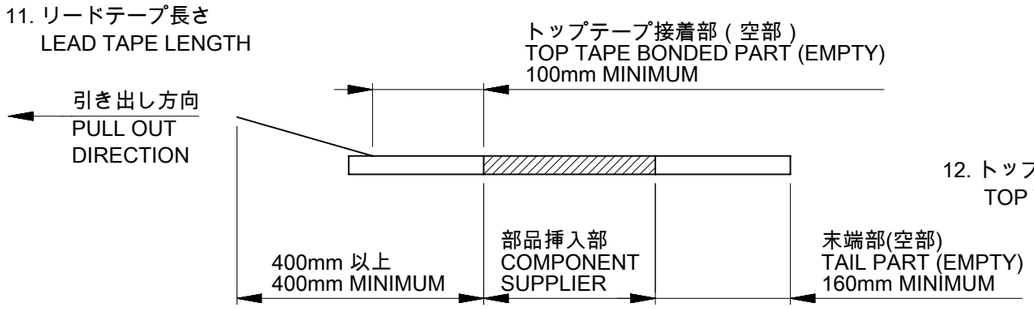

12. トップテープの剥離強度については、IEC 60286-3に準拠
    TOP TAPE PEEL FORCE IS DEFINED BY IEC 60286-3.

H	G	F	E	極数 CIRCUIT SIZE
61.4	57.4	26.2	56±0.3	16
				15
				14
49.4	45.4	20.2	44±0.3	13
				12
				11
				10
				9
				8
37.4	33.4	14.2	32±0.3	7
				6
29.4	25.4	11.5	24 +0.3 -0.1	5
				4
				3
				2

⚠1 TABLE 2

番号 NO.	部品 PART	材質 MATERIAL
④	エンボステープ EMBOSSED TAPE	ポリスチレン(PS) POLYSTYRENE(PS)
⑤	トップテープ TOP TAPE	ポリエチレン(PE), その他 POLYETHYLENE(PE), OTHER
⑥	リール REEL	ポリスチレン(PS), [リサイクル材を含む] POLYSTYRENE(PS) [RECYCLE MATERIAL CONTAINED]

THIS DRAWING CONTAINS INFORMATION THAT IS PROPRIETARY TO MOLEX ELECTRONIC TECHNOLOGIES, LLC AND SHOULD NOT BE USED WITHOUT WRITTEN PERMISSION

DIMENSION UNITS	SCALE
mm	NTS

GENERAL TOLERANCES (UNLESS SPECIFIED)

ANGULAR TOL	±	3.0 °
4 PLACES	±	0.2
3 PLACES	±	0.2
2 PLACES	±	0.2
1 PLACE	±	0.2
0 PLACES	±	0.2

DRAFT WHERE APPLICABLE MUST REMAIN WITHIN DIMENSIONS

CURRENT REV DESC:

EC NO: 718854
DRWN: SOKUMURA01 2023/02/28
CHK'D: SAKIYAMA 2023/08/04
APPR: MARAI 2023/08/04

INITIAL REVISION:
DRWN: TENAGASE 2016/05/12
APPR: TKANEKO 2016/06/23

THIRD ANGLE PROJECTION | DRAWING: A3-SIZE | SERIES: 505578

molex

MICRO-LOCK PLUS 2.0 W/B
SINGLE ROW RIGHT ANGLE SMT PLUG ASSEMBLY
TIN PLATING

PRODUCT CUSTOMER DRAWING

DOCUMENT NUMBER	DOC TYPE	DOC PART	REVISION
5055780001	PSD	000	C

MATERIAL NUMBER	CUSTOMER	SHEET NUMBER
SEE SHEET 1	GENERAL	4 OF 4

DOCUMENT STATUS	P1	RELEASE DATE	2023/08/04 04:04:00

FORMAT: master_mod-A3
REVISION: J1
DATE: 2021/05/07