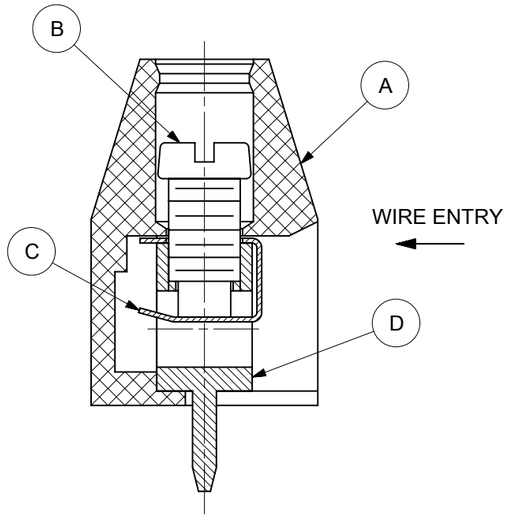

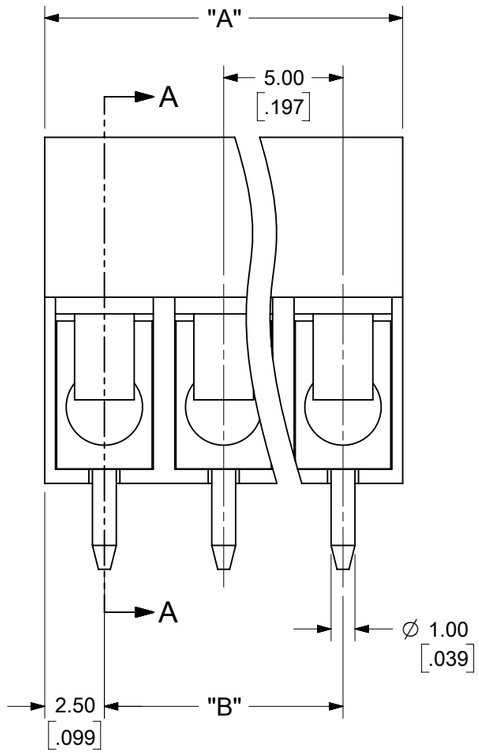

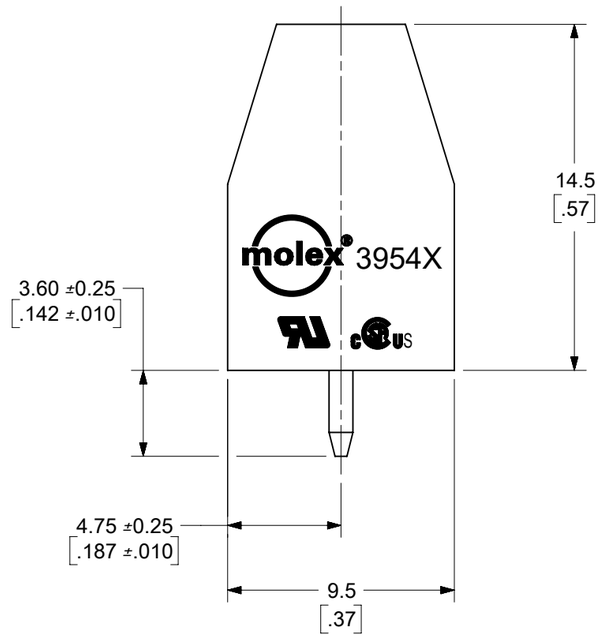

SPECIFICATIONS

1. MATERIAL:
   (A). BODY: NYLON (PA66), UL94 V-0, COLOR: SEE SHEET-2
   (B). SCREW: STEEL, M3.0, ZINC PLATED
   (C). CONTACT: BRASS, NICKEL PLATED
   (D). TERMINAL BLOCK: BRASS, TIN PLATED
2. WIRE RATING: 24-14 AWG
3. ELECTRICAL RATING: 300V, 15A
4. POWER-FREQUENCY WITHSTAND: AC 2500V/1 MIN
5. INSULATION RESISTANCE: DC500V 500MΩ OR ABOVE
6. RATED IMPULSE VOLTAGE: 4000V/MINUS AND PLUS 5 TIMES EACH
7. WIRE STRIP LENGTH: 7.0mm [.28inch]
8. SCREW TORQUE (MAX): 0.34 N.m (3.0 lbf.in)
9. OPERATING TEMPERATURE: -40°C TO +105°C
10. NUMBER OF CIRCUITS: 2 TO 24, SEE SHEET-2

TOLERANCES			
MM	TOL	INCH	TOL
0-6	±0.25	0-.24	±.010
>6-30	±0.40	.24-1.18	±.016
>30-120	±0.50	1.18-4.76	±.020
>120	±0.80	>4.76	±.031

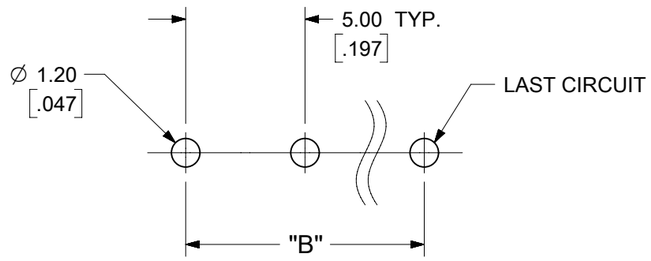

PCB LAYOUT

FUNCTIONAL SYMBOLS
FA = 0
FC = 0
FE = 0
DIVISIONAL SYMBOLS

DIMENSION UNITS: MM/INCH | SCALE: 4:1

GENERAL TOLERANCES (UNLESS SPECIFIED)

	MM	INCH
4 PLACES	±	±
3 PLACES	±	± SEE CHART
2 PLACES	± SEE CHART	± SEE CHART
1 PLACE	± SEE CHART	±
0 PLACES	±	±
ANGULAR TOL	± °	

DRAFT WHERE APPLICABLE MUST REMAIN WITHIN DIMENSIONS

THIS DRAWING CONTAINS INFORMATION THAT IS PROPRIETARY TO MOLEX ELECTRONIC TECHNOLOGIES, LLC AND SHOULD NOT BE USED WITHOUT WRITTEN PERMISSION

CURRENT REV DESC: MIGRATED TO ECTR/NX & ADDED PCB LAYOUT

EC NO: 637366
DRWN: ABENJAMINLW 2020/04/14
CHK'D: DACHAMMER 2020/05/18
APPR: JFMURPHY 2020/05/29

INITIAL REVISION:
DRWN: LROTHAUS 2006/01/09
APPR: JPAWLICK 2006/01/10

THIRD ANGLE PROJECTION | DRAWING: B-SIZE | SERIES: 39543

molex

EURO TERMINAL BLOCK
5.00MM (.197) PITCH PC MOUNT, VERTICAL

PRODUCT CUSTOMER DRAWING

DOCUMENT NUMBER	DOC TYPE	DOC PART	REVISION
SD-39543-003	PSD	001	B2

MATERIAL NUMBER	CUSTOMER	SHEET NUMBER
SEE SHEET-2	GENERAL MARKET	1 OF 2

DOCUMENT STATUS	P1	RELEASE DATE	2020/05/29 16:35:51

FORMAT: Eng-lega-master-tb-prod-B
REVISION: E
DATE: 2020/01/14

CIRCUIT SIZE	MATERIAL NUMBERS MOLDED TO LENGTH						DIMENSIONAL INFORMATION			
	BLACK			GREEN						
	100% TIN			100% TIN						
	PRINTING OPTIONS			PRINTING OPTIONS			DIM. "A"		DIM. "B"	
	None	10A	11A	None	10A	11A	mm	inch	mm	inch
2	395430002	395431002	395432002	395930002	395931002	395932002	10.0	.39	5.00	.197
3	395430003	395431003	395432003	395930003	395931003	395932003	15.0	.59	10.00	.394
4	395430004	395431004	395432004	395930004	395931004	395932004	20.0	.79	15.00	.591
5	395430005	395431005	395432005	395930005	395931005	395932005	25.0	.98	20.00	.787
6	395430006	395431006	395432006	395930006	395931006	395932006	30.0	1.18	25.00	.984
7	395430007	395431007	395432007	395930007	395931007	395932007	35.0	1.38	30.00	1.181
8	395430008	395431008	395432008	395930008	395931008	395932008	40.0	1.57	35.00	1.378
9	395430009	395431009	395432009	395930009	395931009	395932009	45.0	1.77	40.00	1.575
10	395430010	395431010	395432010	395930010	395931010	395932010	50.0	1.97	45.00	1.772
11	395430011	395431011	395432011	395930011	395931011	395932011	55.0	2.17	50.00	1.969
12	395430012	395431012	395432012	395930012	395931012	395932012	60.0	2.36	55.00	2.165
13	395430013	395431013	395432013	395930013	395931013	395932013	65.0	2.56	60.00	2.362
14	395430014	395431014	395432014	395930014	395931014	395932014	70.0	2.76	65.00	2.559
15	395430015	395431015	395432015	395930015	395931015	395932015	75.0	2.95	70.00	2.756
16	395430016	395431016	395432016	395930016	395931016	395932016	80.0	3.15	75.00	2.953
17	395430017	395431017	395432017	395930017	395931017	395932017	85.0	3.35	80.00	3.150
18	395430018	395431018	395432018	395930018	395931018	395932018	90.0	3.54	85.00	3.346
19	395430019	395431019	395432019	395930019	395931019	395932019	95.0	3.74	90.00	3.543
20	395430020	395431020	395432020	395930020	395931020	395932020	100.0	3.94	95.00	3.740
21	395430021	395431021	395432021	395930021	395931021	395932021	105.0	4.13	100.00	3.937
22	395430022	395431022	395432022	395930022	395931022	395932022	110.0	4.33	105.00	4.134
23	395430023	395431023	395432023	395930023	395931023	395932023	115.0	4.53	110.00	4.331
24	395430024	395431024	395432024	395930024	395931024	395932024	120.0	4.72	115.00	4.528

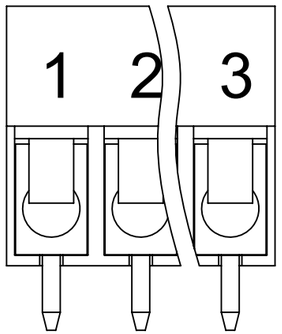

REF. 10A PRINT OPT.

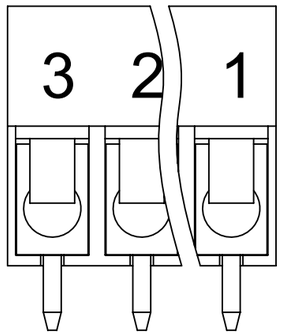

REF. 11A PRINT OPT.

TOLERANCES			
MM	TOL	INCH	TOL
0-6	±0.25	0-.24	±.010
>6-30	±0.40	.24-1.18	±.016
>30-120	±0.50	1.18-4.76	±.020
>120	±0.80	>4.76	±.031

FUNCTIONAL SYMBOLS
EW = 0
EF = 0
EP = 0
DIVISIONAL SYMBOLS

THIS DRAWING CONTAINS INFORMATION THAT IS PROPRIETARY TO MOLEX ELECTRONIC TECHNOLOGIES, LLC AND SHOULD NOT BE USED WITHOUT WRITTEN PERMISSION

DIMENSION UNITS: MM/INCH
SCALE: 3:1

GENERAL TOLERANCES (UNLESS SPECIFIED)

	MM	INCH
4 PLACES	±	±
3 PLACES	±	± SEE CHART
2 PLACES	± SEE CHART	± SEE CHART
1 PLACE	± SEE CHART	±
0 PLACES	±	±
ANGULAR TOL	± °	

DRAFT WHERE APPLICABLE MUST REMAIN WITHIN DIMENSIONS

CURRENT REV DESC: MIGRATED TO ECTR/NX & ADDED PCB LAYOUT

EC NO: 637366
DRWN: ABENJAMINLW 2020/04/14
CHK'D: DACHAMMER 2020/05/18
APPR: JFMURPHY 2020/05/29

INITIAL REVISION:
DRWN: LROTHAUS 2006/01/09
APPR: JPAWLICK 2006/01/10

molex

EURO TERMINAL BLOCK
5.00MM (.197) PITCH PC MOUNT, VERTICAL

PRODUCT CUSTOMER DRAWING

DOCUMENT NUMBER	DOC TYPE	DOC PART	REVISION
SD-39543-003	PSD	001	B2

THIRD ANGLE PROJECTION	DRAWING	SERIES	MATERIAL NUMBER	CUSTOMER	SHEET NUMBER
	B-SIZE	39543	SEE CHART	GENERAL MARKET	2 OF 2

DOCUMENT STATUS	P1	RELEASE DATE	2020/05/29 16:35:51

FORMAT: Eng-lega-master-tb-prod-B
REVISION: E
DATE: 2020/01/14