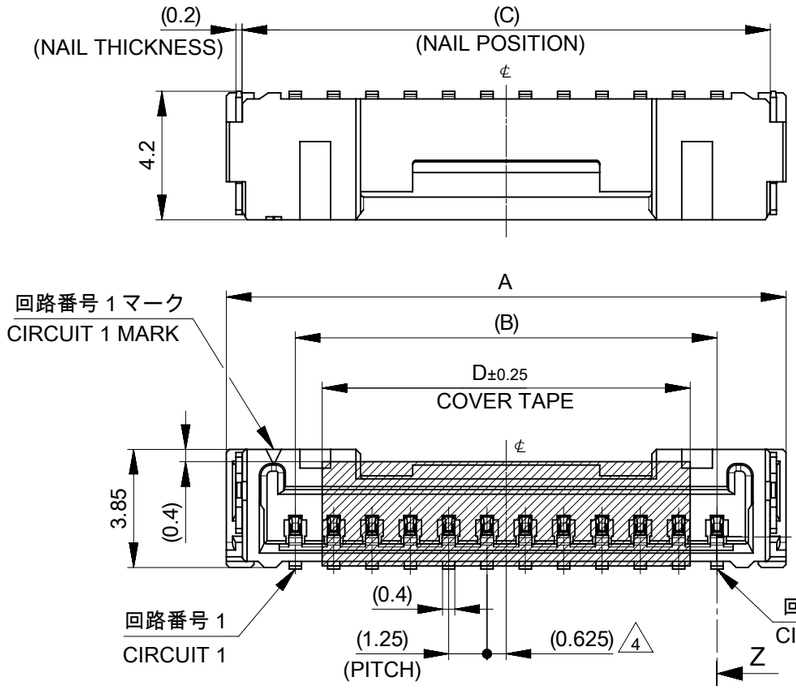

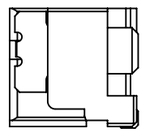

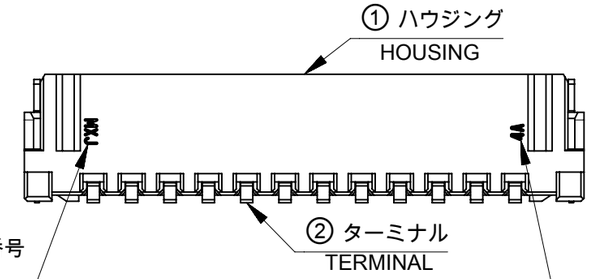

奇数キャビティ：キャビティ番号及び金型番号
偶数キャビティ：トレードマーク
ODD CAVITY:CAVITY AND MOLD NO.
EVEN CAVITY:TRADE MARK

奇数キャビティ：トレードマーク
偶数キャビティ：キャビティ番号及び金型番号
ODD CAVITY:TRADE MARK
EVEN CAVITY:CAVITY AND MOLD NO.

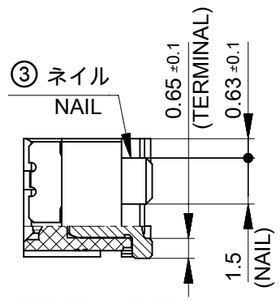

SECTION Z-Z

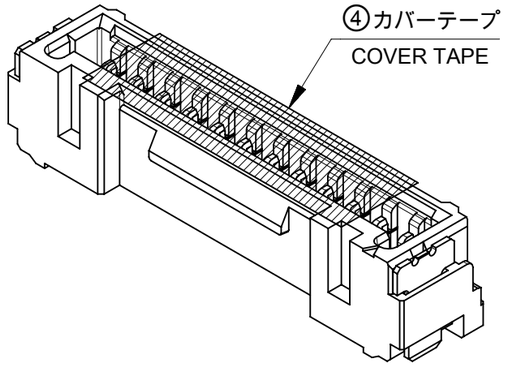

注記：
NOTES :

1. 材料及び仕上げ(めっき仕様)：TABLE 1, TABLE2 参照
   MATERIAL AND FINISHES (PLATING SPECIFICATION) : SEE TABLE 1, TABLE2.
2. 製品仕様書、コネクタ取扱説明書、適合嵌合相手、適合リテーナーはSHEET 5をご参照下さい。
   PLEASE REFER TO SHEET 5 FOR PRODUCT SPECIFICATION, APPLICATION SPECIFICATION, MATE WITH AND APPLICABLE RETAINER.
3. 端子テール部 及び ネイルの平坦度：0.1 MAXIMUM
   TAIL AND NAIL COPLANARITY TO BE 0.1 MAXIMUM
4. 偶数極に適合
   APPLY TO EVEN CIRCUIT
5. 発注番号：SHEET 5 参照
   ORDER NUMBER : PLEASE REFER TO SHEET 5

505568**7*

極数
CIRCUIT SIZE

番号 NO.	ハウジングカラー HOUSING COLOR
0	ナチュラル (ベージュ) NATURAL(BEIGE)
1	黒 BLACK
2	赤 RED
3	黄 YELLOW
4	青 BLUE
6	緑 GREEN
8	橙 ORANGE

22.2	18.75	23.25	16
20.95	17.5	22	15
19.7	16.25	20.75	14
18.45	15	19.5	13
17.2	13.75	18.25	12
15.95	12.5	17	11
14.7	11.25	15.75	10
13.45	10	14.5	9
12.2	8.75	13.25	8
10.95	7.5	12	7
9.7	6.25	10.75	6
8.45	5	9.5	5
7.2	3.75	8.25	4
5.95	2.5	7	3
4.7	1.25	5.75	2
C	B	A	極数 CIRCUIT SIZE

1 TABLE 1

番号 NO.	部品 PART	材質 MATERIAL
①	ハウジング HOUSING	ポリアミド(PA), ガラス充填, UL94 V-0, 色：SHEET 5参照 POLYAMIDE (PA), GLASS FILLED, UL94 V-0, COLOR : SEE SHEET 5
②	ターミナル TERMINAL	黄銅 BRASS
		錫ビスマスめっき：1.0 MICROMETER MINIMUM TIN-BISMUTH PLATING
		ニッケルめっき(下地全面) : 1.0 MICROMETER MINIMUM NICKEL (UNDER-PLATING OVERALL)
③	ネイル NAIL	黄銅 BRASS
		錫めっき：1.0 MICROMETER MINIMUM MATTE TIN PLATING
		ニッケルめっき(下地全面) : 1.0 MICROMETER MINIMUM NICKEL (UNDER-PLATING OVERALL)
④	カバーテープ COVER TAPE	ポリイミド POLYIMIDE

DOCUMENT STATUS | P1 | RELEASE DATE | 2025/02/25 06:03:56

THIS DRAWING CONTAINS INFORMATION THAT IS PROPRIETARY TO MOLEX ELECTRONIC TECHNOLOGIES, LLC AND SHOULD NOT BE USED WITHOUT WRITTEN PERMISSION

DIMENSION UNITS: mm | SCALE: NTS

GENERAL TOLERANCES (UNLESS SPECIFIED)

ANGULAR TOL	±	3.0 °
4 PLACES	±	0.2
3 PLACES	±	0.2
2 PLACES	±	0.2
1 PLACE	±	0.2
0 PLACES	±	0.2

DRAFT WHERE APPLICABLE MUST REMAIN WITHIN DIMENSIONS

CURRENT REV DESC: REMOVED OBSOLETED PART NUMBERS AS PER PCN#515932.

EC NO: 812554
DRWN: RAVINR1 2025/01/29
CHK'D: GGA 2025/02/25
APPR: GGA 2025/02/25

INITIAL REVISION:
DRWN: RWATANABE01 2017/08/28
APPR: TKANEKO 2017/09/26

THIRD ANGLE PROJECTION | DRAWING: A3-SIZE | SERIES: 505568

molex

MICRO-LOCK PLUS 1.25 W/B
SINGLE ROW VERTICAL SMT PLUG ASSEMBLY
TIN-BISMUTH PLATING

PRODUCT CUSTOMER DRAWING

DOCUMENT NUMBER	DOC TYPE	DOC PART	REVISION
5055680000-SD	PSD	000	D1

MATERIAL NUMBER	CUSTOMER	SHEET NUMBER
SEE TABLE	GENERAL	1 OF 5

FORMAT: master-ib-prod-A3
REVISION: J1
DATE: 2021/05/01

製品形状
PRODUCT SHAPE

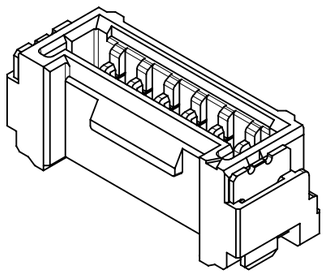

2-11極
2-11 CIRCUIT

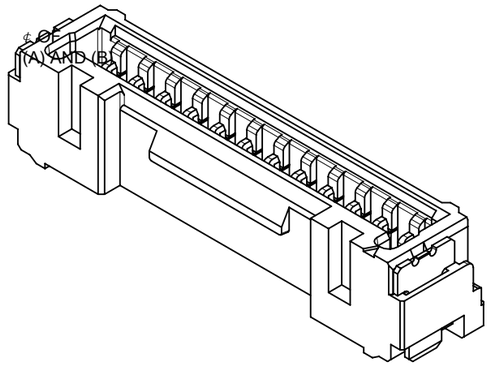

12-13極
12-13 CIRCUIT

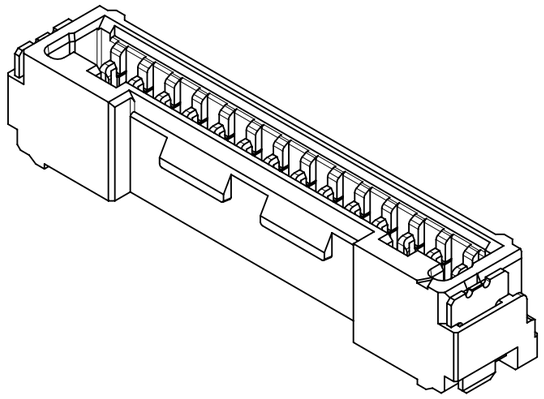

14極
14 CIRCUIT

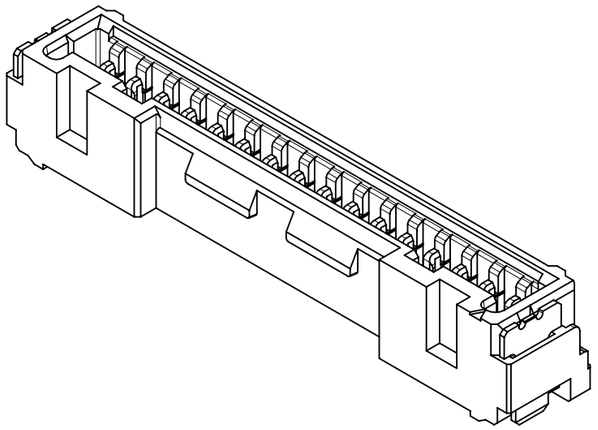

15-16 極
15-16 CIRCUIT

基板パターンレイアウト
PCB PATTERN LAYOUT

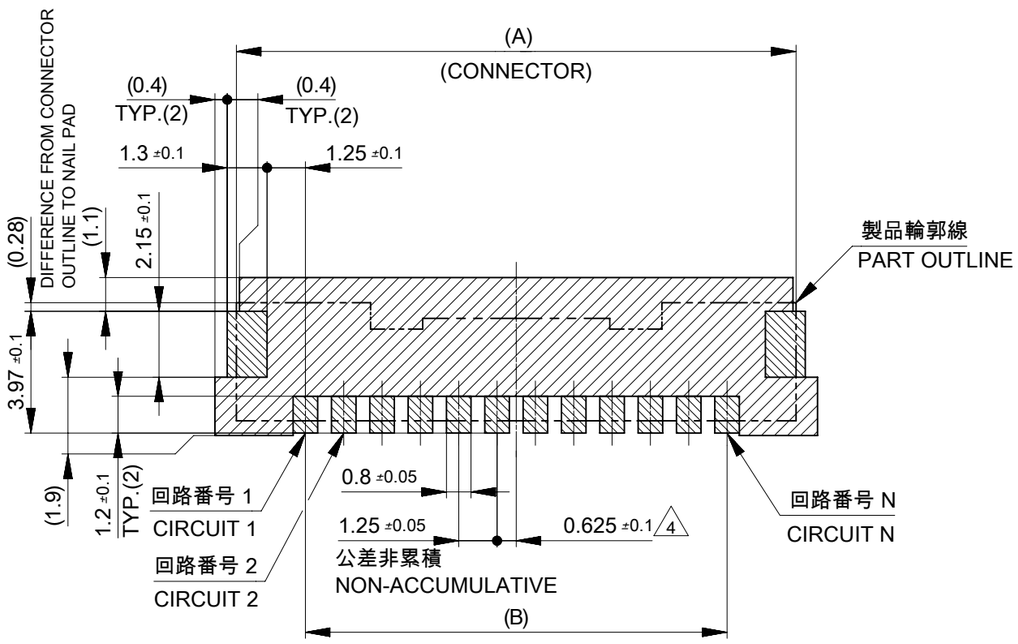

基板パターンレイアウト (参考)
(参考：基板厚 1.6mm, メタルマスク厚さ 0.15mm, マスク開口率 100%)
RECOMMEND PCB LAYOUT : COMPONENT SIDE
(REFERENCE : PCB THICKNESS 1.6mm, STENCIL THICKNESS 0.15mm, APERTURE RATIO 100%)

パターン非推奨エリア
パターンを引き回す際は、製品機能に影響がないことをご確認ください。
PATTERN IS NOT RECOMMENDED ON THE HATCHING AREA
PLEASE CHECK NOT TO HAVE PROBLEM FOR PRODUCT FUNCTION
WHEN SETTING PATTERN ON THE HATCHING AREA.

THIS DRAWING CONTAINS INFORMATION THAT IS PROPRIETARY TO MOLEX ELECTRONIC TECHNOLOGIES, LLC AND SHOULD NOT BE USED WITHOUT WRITTEN PERMISSION

DIMENSION UNITS	mm
SCALE	NTS
GENERAL TOLERANCES (UNLESS SPECIFIED)	
ANGULAR TOL	± 3.0 °
4 PLACES	± 0.2
3 PLACES	± 0.2
2 PLACES	± 0.2
1 PLACE	± 0.2
0 PLACES	± 0.2
DRAFT WHERE APPLICABLE MUST REMAIN WITHIN DIMENSIONS	

CURRENT REV DESC: REMOVED OBSOLETED PART NUMBERS AS PER PCN#515932.

EC NO: 812554
DRWN: RAVINR1 2025/01/29
CHK'D: GGA 2025/02/25
APPR: GGA 2025/02/25

INITIAL REVISION:
DRWN: RWATANABE01 2017/08/28
APPR: TKANEKO 2017/09/26

molex

MICRO-LOCK PLUS 1.25 W/B
SINGLE ROW VERTICAL SMT PLUG ASSEMBLY
TIN-BISMUTH PLATING

PRODUCT CUSTOMER DRAWING

DOCUMENT NUMBER	DOC TYPE	DOC PART	REVISION
5055680000-SD	PSD	000	D1

THIRD ANGLE PROJECTION	DRAWING	SERIES	MATERIAL NUMBER	CUSTOMER	SHEET NUMBER
	A3-SIZE	505568	SEE TABLE	GENERAL	2 OF 5

DOCUMENT STATUS	P1	RELEASE DATE	2025/02/25 06:03:56

FORMAT: master-tb-prod-A3
REVISION: J1
DATE: 2021/05/01

吸着エリア
SUCTION AREA

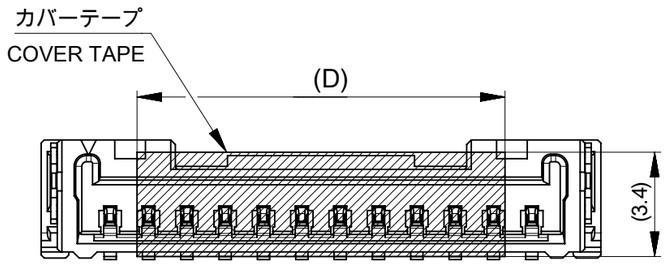

嵌合状態図
MATED CONNECTORS

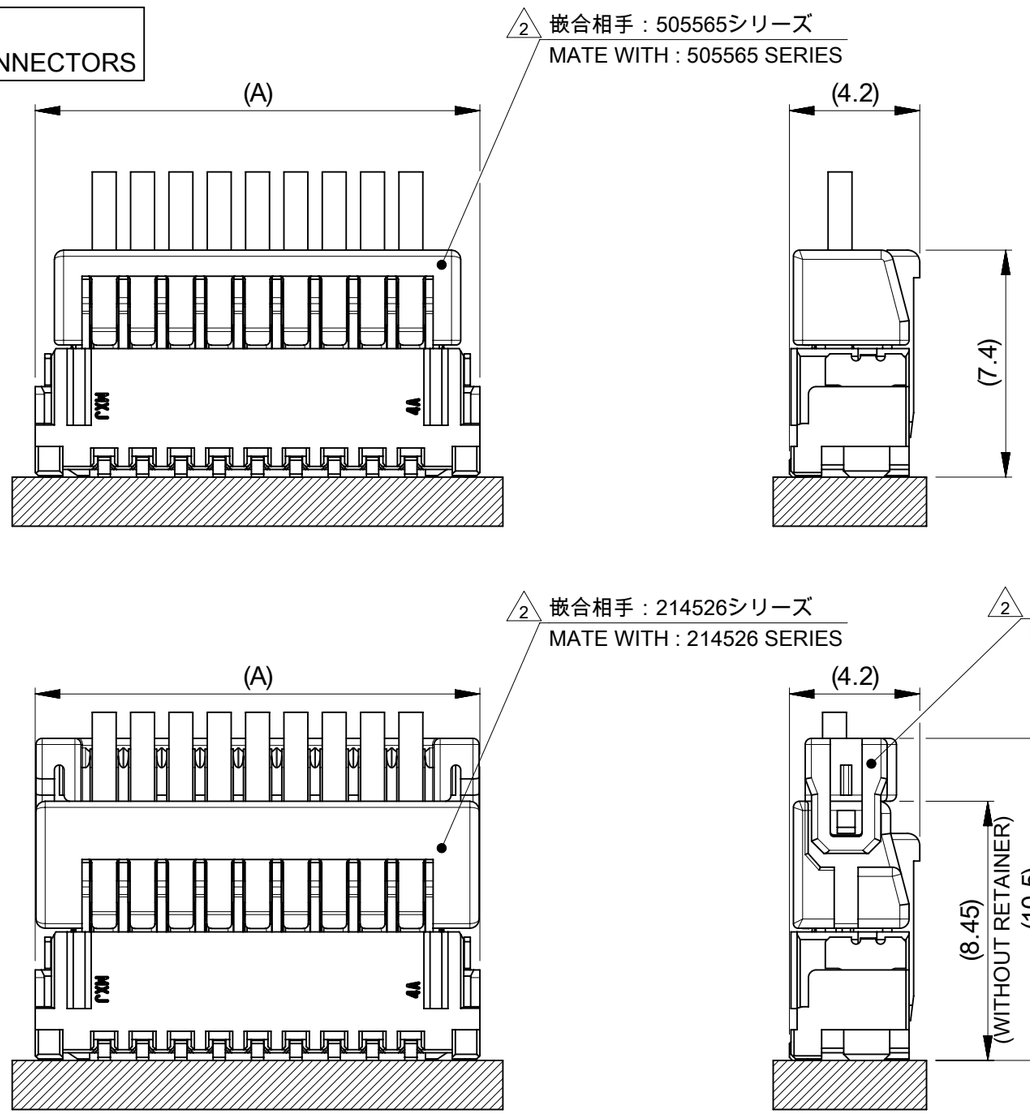

12	16
	15
	14
	13
	12
	11
	10
10	9
8	8
	7
	6
	5
7	4
5	3
	2
D	極数 CIRCUIT SIZE

THIS DRAWING CONTAINS INFORMATION THAT IS PROPRIETARY TO MOLEX ELECTRONIC TECHNOLOGIES, LLC AND SHOULD NOT BE USED WITHOUT WRITTEN PERMISSION

DIMENSION UNITS	mm
SCALE	NTS
GENERAL TOLERANCES (UNLESS SPECIFIED)	
ANGULAR TOL	± 3.0 °
4 PLACES	± 0.2
3 PLACES	± 0.2
2 PLACES	± 0.2
1 PLACE	± 0.2
0 PLACES	± 0.2
DRAFT WHERE APPLICABLE MUST REMAIN WITHIN DIMENSIONS	

CURRENT REV DESC: REMOVED OBSOLETED PART NUMBERS AS PER PCN#515932.

EC NO: 812554
DRWN: RAVINR1 2025/01/29
CHK'D: GGA 2025/02/25
APPR: GGA 2025/02/25

INITIAL REVISION:
DRWN: RWATANABE01 2017/08/28
APPR: TKANEKO 2017/09/26

molex

MICRO-LOCK PLUS 1.25 W/B
SINGLE ROW VERTICAL SMT PLUG ASSEMBLY
TIN-BISMUTH PLATING

PRODUCT CUSTOMER DRAWING

DOCUMENT NUMBER	DOC TYPE	DOC PART	REVISION
5055680000-SD	PSD	000	D1

THIRD ANGLE PROJECTION	DRAWING	SERIES	MATERIAL NUMBER	CUSTOMER	SHEET NUMBER
	A3-SIZE	505568	SEE TABLE	GENERAL	3 OF 5

DOCUMENT STATUS	P1	RELEASE DATE	2025/02/25 06:03:56

FORMAT: master-llb-prod-A3
REVISION: J1
DATE: 2021/05/01

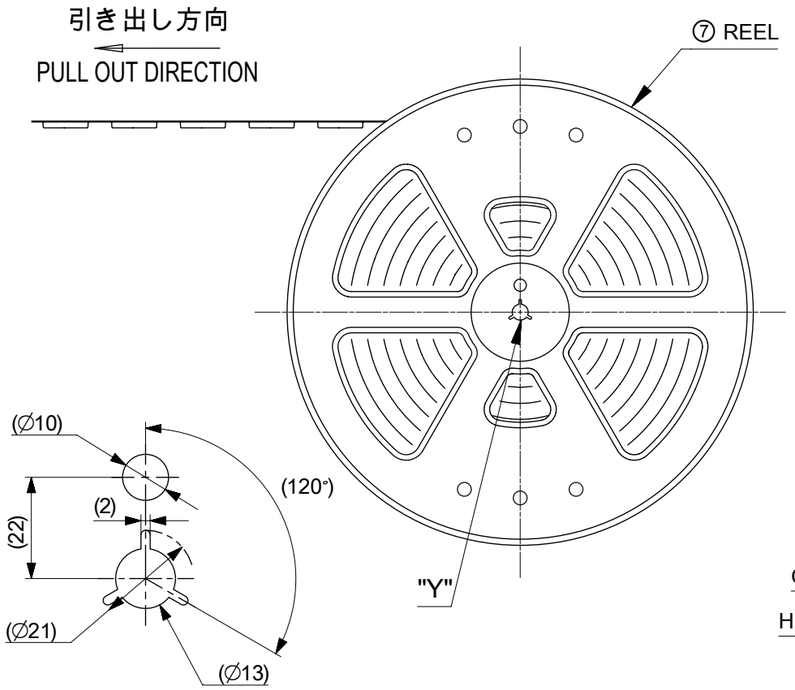

DETAIL "Y"

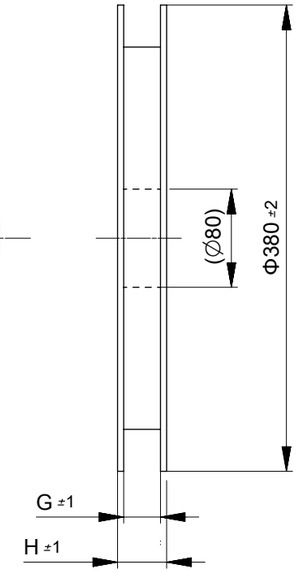

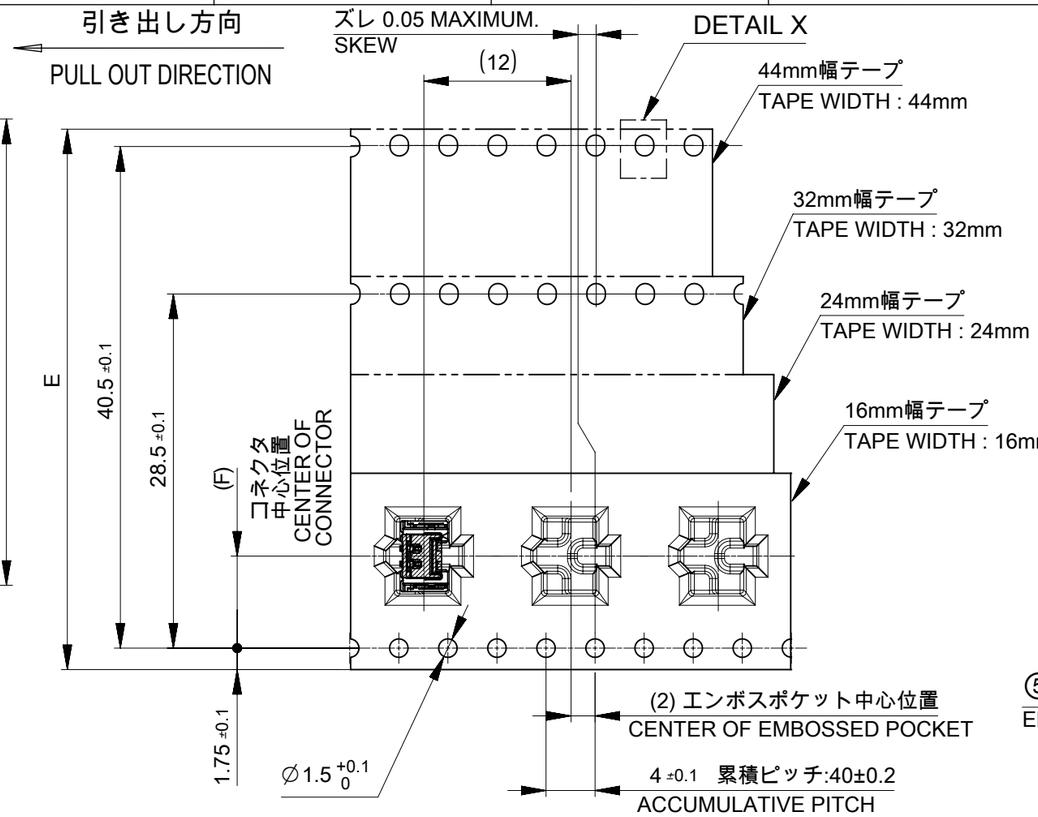

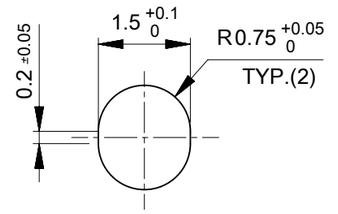

DETAIL X

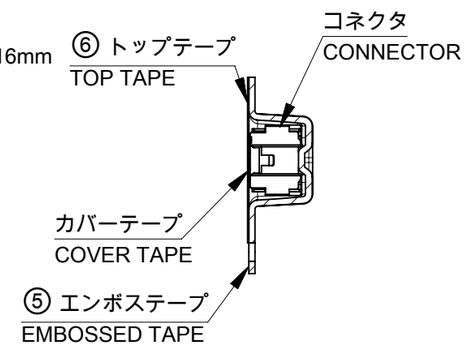

注記 NOTE

6. 梱包数量： 1200個 / リール
   NUMBER OF CONNECTORS : 1200 PCS/REEL.
7. リードテープ長さ
   LEAD TAPE LENGTH.

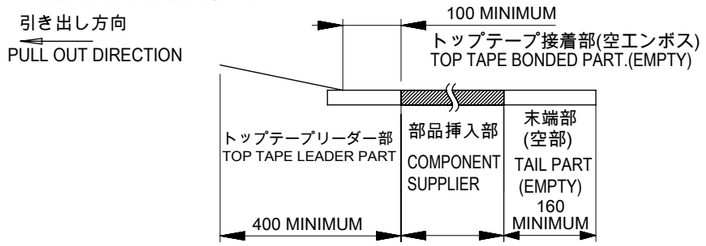

8. トップテープの剥離強度はIEC60286-3に準拠
   TOP TAPE PEELING FORCE IS DEFINED BY IEC60286-3

49.4	45.4	20.2	44±0.3	16
				15
				14
37.4	33.4	14.2	32±0.3	13
				12
				11
				10
29.4	25.4	11.5	$24^{+0.3}_{-0.1}$	9
				8
				7
				6
				5
				4
21.4	17.4	7.5	$16^{+0.3}_{-0.1}$	3
				2
H	G	F	E	極数 CIRCUIT SIZE

△1 TABLE 2

番号 NO.	部品 PART	材質 MATERIAL
⑤	エンボステープ EMBOSSED TAPE	ポリスチレン(PS) POLYSTYRENE(PS)
⑥	トップテープ TOP TAPE	ポリエチレン(PE), その他 POLYETHYLENE(PE), ETC
⑦	リール REEL	ポリスチレン(PS) < リサイクル材を含む > POLYSTYRENE(PS) < RECYCLE MATERIAL CONTAINED >

DOCUMENT STATUS	P1	RELEASE DATE	2025/02/25 06:03:56

THIS DRAWING CONTAINS INFORMATION THAT IS PROPRIETARY TO MOLEX ELECTRONIC TECHNOLOGIES, LLC AND SHOULD NOT BE USED WITHOUT WRITTEN PERMISSION

DIMENSION UNITS	SCALE
mm	NTS

GENERAL TOLERANCES (UNLESS SPECIFIED)

ANGULAR TOL	±	3.0 °
4 PLACES	±	0.2
3 PLACES	±	0.2
2 PLACES	±	0.2
1 PLACE	±	0.2
0 PLACES	±	0.2

DRAFT WHERE APPLICABLE MUST REMAIN WITHIN DIMENSIONS

CURRENT REV DESC: REMOVED OBSOLETED PART NUMBERS AS PER PCN#515932.

EC NO: 812554
DRWN: RAVINR1 2025/01/29
CHK'D: GGA 2025/02/25
APPR: GGA 2025/02/25

INITIAL REVISION:
DRWN: RWATANABE01 2017/08/28
APPR: TKANEKO 2017/09/26

THIRD ANGLE PROJECTION | DRAWING: A3-SIZE | SERIES: 505568

molex

MICRO-LOCK PLUS 1.25 W/B
SINGLE ROW VERTICAL SMT PLUG ASSEMBLY
TIN-BISMUTH PLATING

PRODUCT CUSTOMER DRAWING

DOCUMENT NUMBER	DOC TYPE	DOC PART	REVISION
5055680000-SD	PSD	000	D1

MATERIAL NUMBER	CUSTOMER	SHEET NUMBER
SEE TABLE	GENERAL	4 OF 5

FORMAT: master-lb-prod-A3
REVISION: J1
DATE: 2021/05/01

△2 適合製品及び各種仕様書 APPLICABLE PRODUCTS AND VARIOUS SPECIFICATIONS

梱包仕様書 PACKAGING SPECIFICATION	5055689200 PS 200

適合嵌合相手 MATE WITH	シリーズ番号 SERIES NUMBER	505565	214526
	リテーナー対応 RETAINER APPLICABLE	NOT COMPLIANT	COMPLIANT (NATURAL, BLACK, RED, YELLOW, BLUE)
適合リテーナーシリーズ番号 APPLICABLE RETAINER SERIES NUMBER		-	214528
製品仕様書 PRODUCT SPECIFICATION		5055650000 PS 000	2145260000-PS PS 000
コネクタ取扱説明書 APPLICATION SPECIFICATION		5055650000-AS PS 000	

△5 505568**7* 発注番号一覧 ORDER NUMBER LIST

GREEN	BLUE	YELLOW	RED	BLACK	NATURAL (BEIGE)	HOUSING COLOR
--------	5055681674	--------	5055681672	5055681671	5055681670	16
--------	5055681574	--------	5055681572	5055681571	5055681570	15
--------	5055681474	--------	5055681472	5055681471	5055681470	14
--------	5055681374	--------	5055681372	5055681371	5055681370	13
--------	5055681274	--------	5055681272	5055681271	5055681270	12
--------	5055681174	--------	5055681172	5055681171	5055681170	11
--------	5055681074	--------	5055681072	5055681071	5055681070	10
5055680976	5055680974	5055680973	5055680972	5055680971	5055680970	9
--------	5055680874	5055680873	5055680872	5055680871	5055680870	8
--------	5055680774	--------	5055680772	5055680771	5055680770	7
--------	5055680674	5055680673	5055680672	5055680671	5055680670	6
--------	5055680574	--------	5055680572	5055680571	5055680570	5
--------	5055680474	--------	5055680472	5055680471	5055680470	4
--------	5055680374	--------	5055680372	5055680371	5055680370	3
--------	5055680274	--------	5055680272	5055680271	5055680270	2
発注番号：ORDER NUMBER						極数 CIRCUIT SIZE
エンボステープ梱包 PACKAGING STYLE: EMBOSSED TAPE AND REEL						

THIS DRAWING CONTAINS INFORMATION THAT IS PROPRIETARY TO MOLEX ELECTRONIC TECHNOLOGIES, LLC AND SHOULD NOT BE USED WITHOUT WRITTEN PERMISSION

DIMENSION UNITS	SCALE
mm	NTS

GENERAL TOLERANCES (UNLESS SPECIFIED)

ANGULAR TOL	±	3.0 °
4 PLACES	±	0.2
3 PLACES	±	0.2
2 PLACES	±	0.2
1 PLACE	±	0.2
0 PLACES	±	0.2

DRAFT WHERE APPLICABLE MUST REMAIN WITHIN DIMENSIONS

CURRENT REV DESC: REMOVED OBSOLETED PART NUMBERS AS PER PCN#515932.

EC NO: 812554
DRWN: RAVINR1 2025/01/29
CHK'D: GGA 2025/02/25
APPR: GGA 2025/02/25

INITIAL REVISION:
DRWN: RWATANABE01 2017/08/28
APPR: TKANEKO 2017/09/26

molex

MICRO-LOCK PLUS 1.25 W/B
SINGLE ROW VERTICAL SMT PLUG ASSEMBLY
TIN-BISMUTH PLATING

PRODUCT CUSTOMER DRAWING

DOCUMENT NUMBER	DOC TYPE	DOC PART	REVISION
5055680000-SD	PSD	000	D1

THIRD ANGLE PROJECTION	DRAWING	SERIES	MATERIAL NUMBER	CUSTOMER	SHEET NUMBER
	A3-SIZE	505568	SEE TABLE	GENERAL	5 OF 5

DOCUMENT STATUS	P1	RELEASE DATE	2025/02/25 06:03:56

FORMAT: master-tb-prod-A3
REVISION: J1
DATE: 2021/05/01