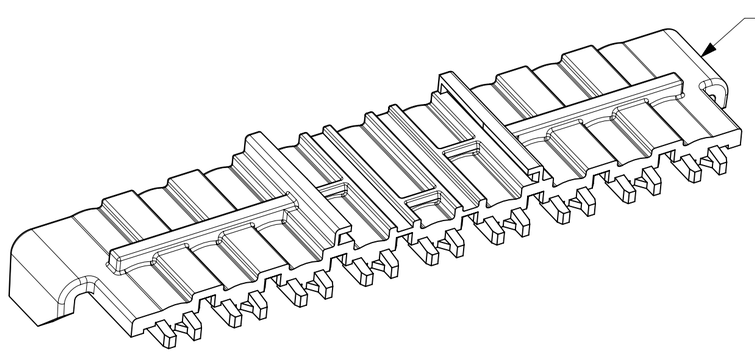

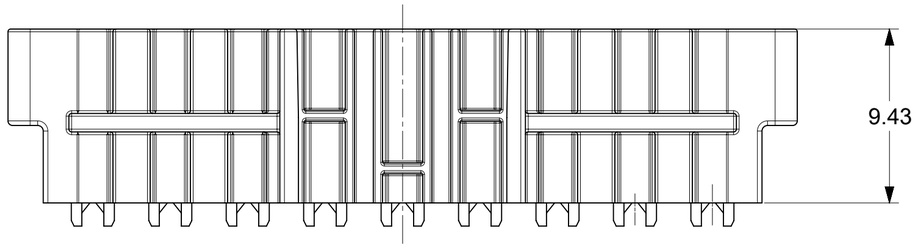

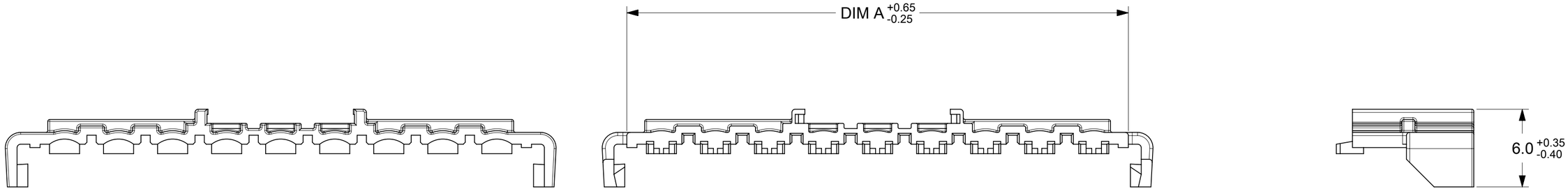

PART NUMBER	CKTS	MATERIAL	DIM A
1727090002	2	A	10.97
1727090003	3	A	13.78
1727090004	4	A	17.98
1727090005	5	A	22.18
1727090006	6	A	26.38
1727090102	2	B	10.97
1727090103	3	B	13.78
1727090104	4	B	17.98
1727090105	5	B	22.18
1727090106	6	B	26.38
1727090007	7	A	30.58
1727090008	8	A	34.78
1727090009	9	A	38.98
1727090010	10	A	43.18
1727090011	11	A	47.38
1727090012	12	A	51.58
1727090107	7	B	30.58
1727090108	8	B	34.78
1727090109	9	B	38.98
1727090110	10	B	43.18
1727090111	11	B	47.38
1727090112	12	B	51.58

NOTES:
1. MATERIAL:
   'A' = NYLON V-0, LOW HALOGEN, COLOR: NATURAL (WHITE)
   'B' = NYLON V-2, GLOW WIRE CAPABLE, COLOR: NATURAL (WHITE)
2. FINISH: NONE
3. PRODUCT SPECIFICATION: PS-172718-0000 and 2029880001-PS
   APPLICATION SPECIFICATION: AS-172718-0000
4. PACKAGING SPECIFICATION:
   PK-172709-0000
   REFER TO AS-45499-001 FOR MOISTURIZING NYLON CONNECTOR PARTS.
5. THIS TPA TO BE USED WITH MOLEX FRONT HOUSING SERIES 172708, 172762, 172767, 200453, 200471 & 200488.
6. DIMENSIONS GIVEN ACROSS CENTERLINES ARE TO BE SYMMETRICAL ABOUT THOSE CENTERLINES WITHIN HALF THE TOTAL TOLERANCE.
7. THIS PART CONFORMS TO CLASS 'B' REQUIREMENTS OF COSMETIC SPECIFICATION PS-45499-002.

THIS DRAWING CONTAINS INFORMATION THAT IS PROPRIETARY TO MOLEX ELECTRONIC TECHNOLOGIES, LLC AND SHOULD NOT BE USED WITHOUT WRITTEN PERMISSION

DIMENSION UNITS	mm
SCALE	NTS
GENERAL TOLERANCES (UNLESS SPECIFIED)	
ANGULAR TOL	± 0.5 °
4 PLACES	±
3 PLACES	±
2 PLACES	± 0.25
1 PLACE	± 0.35
0 PLACES	±
DRAFT WHERE APPLICABLE MUST REMAIN WITHIN DIMENSIONS	

CURRENT REV DESC:

EC NO: 810480
DRWN: JERRYW8 2025/01/23
CHK'D: XQZHANG 2025/01/23
APPR: XQZHANG 2025/01/23

INITIAL REVISION:
DRWN: SNAGARAVENKA 2017/02/22
APPR: ISHWARG 2018/07/23

molex

TPA (CPA CAPABLE) MINI-FIT TPA 2.0

PRODUCT CUSTOMER DRAWING

DOCUMENT NUMBER	DOC TYPE	DOC PART	REVISION
1727090001-SD	PSD	000	A3

THIRD ANGLE PROJECTION	DRAWING	SERIES	MATERIAL NUMBER	CUSTOMER	SHEET NUMBER
	C-SIZE	172709	SEE TABLE	GENERAL MARKET	1 OF 1

DOCUMENT STATUS	P1	RELEASE DATE	2025/01/23 09:09:15

FORMAT: master-tb-prod-C
REVISION: J1
DATE: 2021/05/01