ELV AND RoHS COMPLIANT

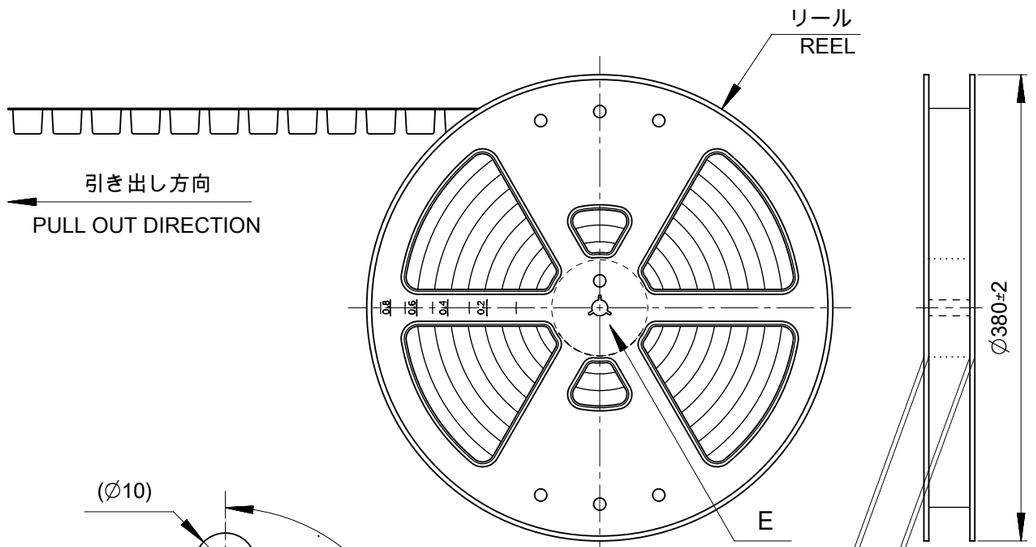

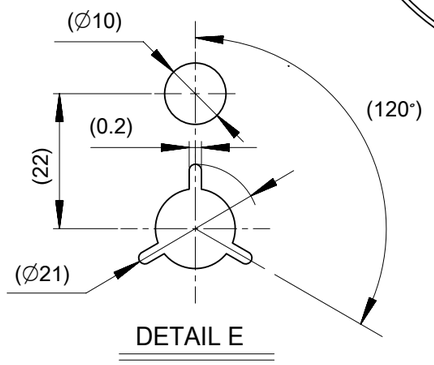

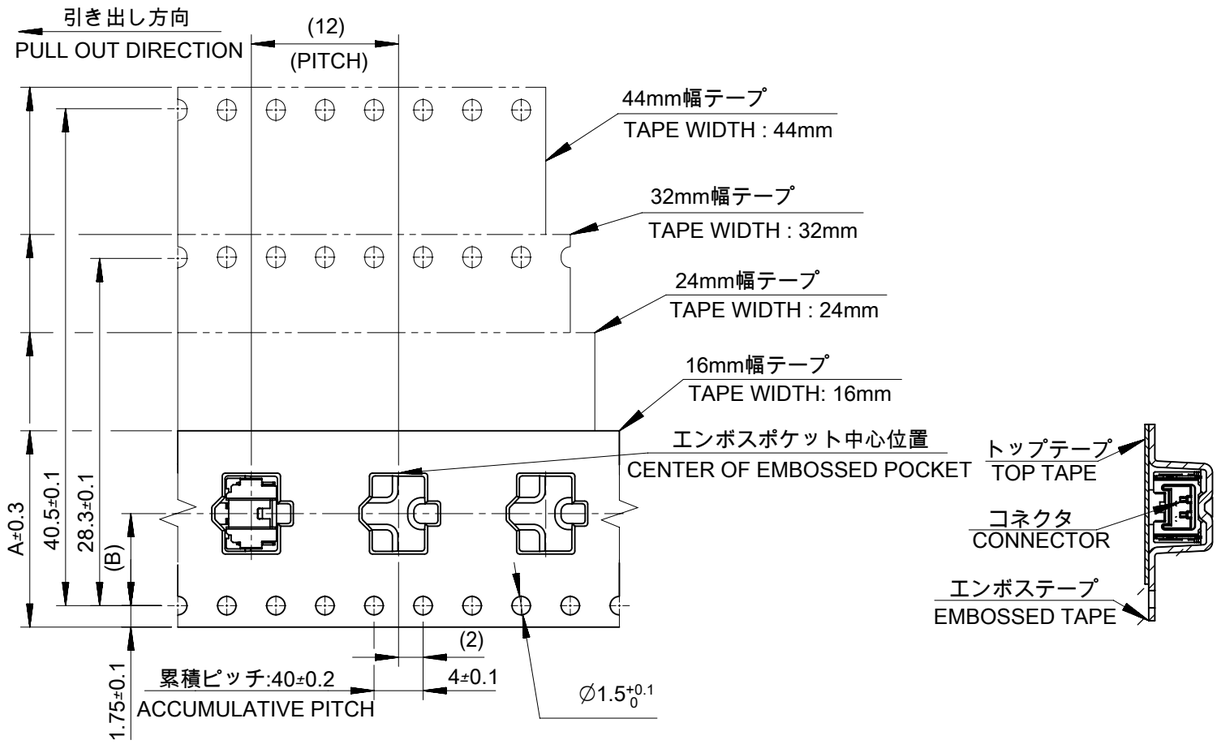

NOTES

1. 製品詳細寸法は製品単体図面を参照して下さい。
   FOR DETAIL OF CONNECTOR DIMENSIONS,
   PLEASE SEE THE DRAWING OF CONNECTOR ITSELF (NOT PACKAGED).
2. 梱包数量　:　1200個
   NUMBER OF CONNECTIORS : 1200 PIECES/REEL.
3. リードテープ長さ
   LEAD TAPE LENGTH

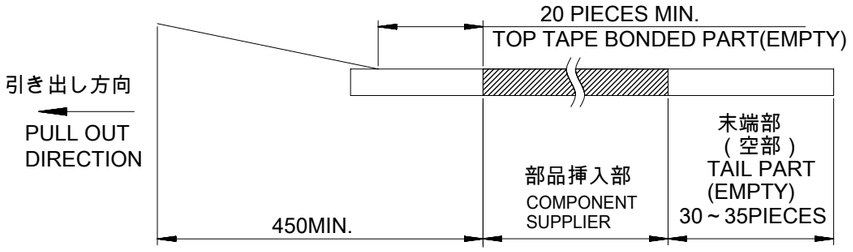

4. 材料　MATERIAL
   キャリアテープ：ポリスチレン（　）PS
   CARRIER TAPE：POLYSTYRENE（PS）
   トップテープ：ポリエステル（　　）PETその他
   TOP TAPE：POLYESTER（PET）、OTHER
   リール：ポリスチレン（　）PS<リサイクル材を含む>
   REEL：POLYSTYRENE（PS）<RECYCLE MATERIAL CONTAINED>
5. トップテープの剥離強度については、IEC60286-3に準拠。
   TOP TAPE PEEL FORCE IS DEFINED BY IEC60286-3.

D	C	B	エンボステープ幅 WIDTH OF TAPE A	エンボス梱包 EMBOSSED TAPE PACKAGE / オーダー番号 ORDER NO.	極数 CKT. NO.
49.4	45.4	20.2	44	504195167*	16
49.4	45.4	20.2	44	504195157*	15
49.4	45.4	20.2	44	504195147*	14
37.4	33.4	14.2	32	504195127*	12
37.4	33.4	14.2	32	504195117*	11
37.4	33.4	14.2	32	504195107*	10
29.4	25.4	11.5	24	504195097*	9
29.4	25.4	11.5	24	504195087*	8
29.4	25.4	11.5	24	504195077*	7
29.4	25.4	11.5	24	504195067*	6
29.4	25.4	11.5	24	504195057*	5
29.4	25.4	11.5	24	504195047*	4
21.4	17.4	7.5	16	504195037*	3
21.4	17.4	7.5	16	504195027*	2

THIS DRAWING CONTAINS INFORMATION THAT IS PROPRIETARY TO MOLEX ELECTRONIC TECHNOLOGIES, LLC AND SHOULD NOT BE USED WITHOUT WRITTEN PERMISSION

DIMENSION UNITS	SCALE
mm	2:1

GENERAL TOLERANCES (UNLESS SPECIFIED)

ANGULAR TOL	±	1.0 °
4 PLACES	±	0.2
3 PLACES	±	0.25
2 PLACES	±	0.3
1 PLACE	±	0.1
0 PLACES	±	

DRAFT WHERE APPLICABLE MUST REMAIN WITHIN DIMENSIONS

CURRENT REV DESC: REMOVED OBSOLETED PART NUMBERS AS PER PCN#515183

EC NO: 826028
DRWN: SANATK1 2025/05/08
CHK'D: GGA 2025/06/30
APPR: GGA 2025/06/30

INITIAL REVISION:
DRWN: SSATO02 2013/07/29
APPR: NUKITA 2013/08/08

THIRD ANGLE PROJECTION | DRAWING: A3-SIZE | SERIES: 504195

molex

EMBOSSED TAPE PKG FOR 1.25 WTB SINGLE RA SMT

PRODUCT CUSTOMER DRAWING

DOCUMENT NUMBER	DOC TYPE	DOC PART	REVISION
SD-504195-001	PSD	001	A2

MATERIAL NUMBER	CUSTOMER	SHEET NUMBER
SEE CHART	GENERAL MARKET	1 OF 2

DOCUMENT STATUS	P1	RELEASE DATE	2025/06/30 13:30:53

FORMAT: master-tb-prod-A3
REVISION: J1
DATE: 2021/05/01

ELV AND RoHS COMPLIANT

HSG COLOR BLUE	HSG COLOR YELLOW	HSG COLOR RED	HSG COLOR BLACK	HSG COLOR NATURAL(BEIGE)	
---	---	---	---	5041951670	16
---	---	---	---	5041951570	15
---	---	---	---	5041951470	14
---	---	---	---	5041951270	12
---	---	---	---	5041951170	11
---	---	---	---	5041951070	10
---	---	---	---	5041950970	9
---	---	---	---	5041950870	8
5041950774	5041950773	5041950772	5041950771	5041950770	7
5041950674	---	---	5041950671	5041950670	6
---	---	---	---	5041950570	5
---	---	---	5041950471	5041950470	4
---	---	---	5041950371	5041950370	3
---	---	---	---	5041950270	2
EMBOSSED TAPE PACKAGE	EMBOSSED TAPE PACKAGE	EMBOSSED TAPE PACKAGE	EMBOSSED TAPE PACKAGE	EMBOSSED TAPE PACKAGE	極数
オーダー番号 ORDER NO.	オーダー番号 ORDER NO.	オーダー番号 ORDER NO.	オーダー番号 ORDER NO.	オーダー番号 ORDER NO.	CKT.NO.

THIS DRAWING CONTAINS INFORMATION THAT IS PROPRIETARY TO MOLEX ELECTRONIC TECHNOLOGIES, LLC AND SHOULD NOT BE USED WITHOUT WRITTEN PERMISSION

DIMENSION UNITS	SCALE
mm	2:1

GENERAL TOLERANCES (UNLESS SPECIFIED)

ANGULAR TOL	±	1.0 °
4 PLACES	±	0.2
3 PLACES	±	0.25
2 PLACES	±	0.3
1 PLACE	±	0.1
0 PLACES	±	

DRAFT WHERE APPLICABLE MUST REMAIN WITHIN DIMENSIONS

CURRENT REV DESC: REMOVED OBSOLETED PART NUMBERS AS PER PCN#515183

EC NO: 826028
DRWN: SANATK1 2025/05/08
CHK'D: GGA 2025/06/30
APPR: GGA 2025/06/30

INITIAL REVISION:
DRWN: SSATO02 2013/07/29
APPR: NUKITA 2013/08/08

molex

EMBOSSED TAPE PKG FOR
1.25 WTB SINGLE RA SMT

PRODUCT CUSTOMER DRAWING

DOCUMENT NUMBER	DOC TYPE	DOC PART	REVISION
SD-504195-001	PSD	001	A2

THIRD ANGLE PROJECTION	DRAWING	SERIES	MATERIAL NUMBER	CUSTOMER	SHEET NUMBER
	A3-SIZE	504195	SEE CHART	GENERAL MARKET	2 OF 2

DOCUMENT STATUS	P1	RELEASE DATE	2025/06/30 13:30:53

FORMAT: master-ib-prod-A3
REVISION: J1
DATE: 2021/05/01

ELV AND RoHS COMPLIANT

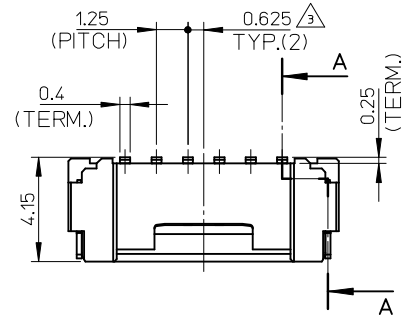

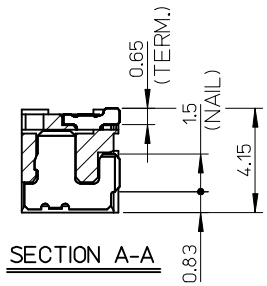

SECTION A-A

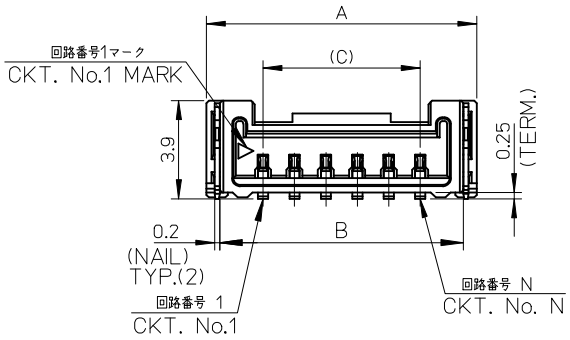

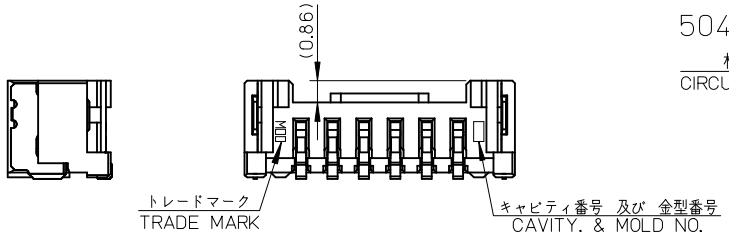

NOTES

1. 嵌合相手：504193**0*
   MATE WITH : 504193**0*
2. 端子テール部 及び ネイルの平坦度：0.1MAX.
   TAIL AND NAIL COPLANARITY TO BE 0.1 MAX.
3. △3 極数／2＝偶数に適用．
   APPLY FOR CKT. SIZE / 2 = EVEN.
4. 端子テール部 及び ネイルに錫めっきを使用しているため、
   外観に摺動痕が付く場合が御座います．
   THE WOUND OF FRICTION MIGHT ADHERE TO EXTERNALS BECAUSE THE TIN PLATING IS USED FOR THA TAIL AND NAIL.
5. 本製品のプラスチック部に黒点等が確認される場合や
   色合いが異なる場合がありますが、製品性能に影響はありません．
   THERE IS NO INFLUENCE IN THE PRODUCT PERFORMANCE THOUGH THE BLACK SPOT ETC. MIGHT BE CONFIRMED TO THE PLASTIC PART OF THIS PRODUCT AND THE SHADE MIGHT BE DIFFERENT.
6. アプリケーション仕様書(コネクタ取扱説明書)：AS-504193-001/-002
   APPLICATION SPECIFICATIONS(CONNECTOR MANUAL) : AS-504193-001/-002
7. 製品仕様書：PS-504193-001
   PRODUCT SPECIFICATION : PS-504193-001
8. 製品番号 MATERIAL No.

504195**0*
極数 CIRCUIT SIZE
色 COLOR

NO.	COLOR
0	NATURAL
1	BLACK
2	RED
3	YELLOW
4	BLUE
6	GREEN
8	ORANGE

D	C	B	A	EMBOSSED TAPE PACKAGE / オーダー番号 ORDER NO.	極数 CKT. NO.
10.7	18.75	22.2	23.25	504195167*	16
10.7	17.5	20.95	22	504195157*	15
10.7	16.25	19.7	20.75	504195147*	14
9.2	15	18.45	19.5	504195137*	13
9.2	13.75	17.2	18.25	504195127*	12
9.2	12.5	15.95	17	504195117*	11
9.2	11.25	14.7	15.75	504195107*	10
6.7	10	13.45	14.5	504195097*	9
6.7	8.75	12.2	13.25	504195087*	8
6.7	7.5	10.95	12	504195077*	7
6.6	6.25	9.7	10.75	504195067*	6
5.35	5	8.45	9.5	504195057*	5
4.1	3.75	7.2	8.25	504195047*	4
2.85	2.5	5.95	7	504195037*	3
1.9	1.25	4.7	5.75	504195027*	2

部品 PART	材質 MATERIAL
ハウジング HOUSING	ポリアミド(PA)，ガラス充填，UL94 V-0，色：SEET3参照 POLYAMIDE(PA), GALASS FILED, UL94 V-0, COLOR : SEE SHEET 3
ターミナル TERMINAL	黄銅 BRASS
	錫めっき：1.0 micro-meter MIN. TIN
	ニッケルめっき(下地)：1.0 micro-meter MIN. NICKEL (UNDER PLATING)
ネイル NAIL	黄銅 BRASS
	錫めっき：1.0 micro-meter MIN. TIN
	ニッケルめっき(下地)：1.0 micro-meter MIN. NICKEL (UNDER PLATING)

REVISED
EC NO: J2016-0928
DRWN:SSATO02 2016/03/29
CH'KD:KASAKAWA 2016/03/29
APPR:TKANEKO 2016/03/29
DESCRIPTION
REV B

GENERAL TOLERANCES (UNLESS SPECIFIED)

0.25	UNDER			±0.03
0.25	OVER	0.5	UNDER	±0.05
0.5	OVER	1.0	UNDER	±0.1
1.0	OVER	10	UNDER	±0.2
10	OVER	30	UNDER	±0.25
30	OVER			±0.3

ANGULAR ±1 °

DRAFT WHERE APPLICABLE MUST REMAIN WITHIN DIMENSIONS

DIMENSION STYLE: MM ONLY
SCALE: 5:1
DESIGN UNITS: METRIC
THIRD ANGLE PROJECTION

DRAWN BY: SSATO02 DATE: 2013/07/29
CHECKED BY: KASAKAWA DATE: 2013/07/30
APPROVED BY: NUKITA DATE: 2013/08/08
MATERIAL NO.: SEE SHEET 3

TITLE: 1.25 WTB SINGLE SMT RA PLUG ASS'Y

molex

DOCUMENT NO.: SD-504195-002
SHEET NO.: 1 OF 3
SIZE: A3

THIS DRAWING CONTAINS INFORMATION THAT IS PROPRIETARY TO MOLEX ELECTRONIC TECHNOLOGIES, LLC AND SHOULD NOT BE USED WITHOUT WRITTEN PERMISSION

ELV AND RoHS COMPLIANT

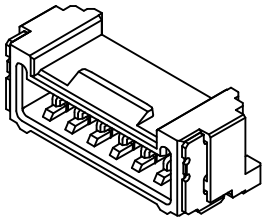

2~13 CKT.

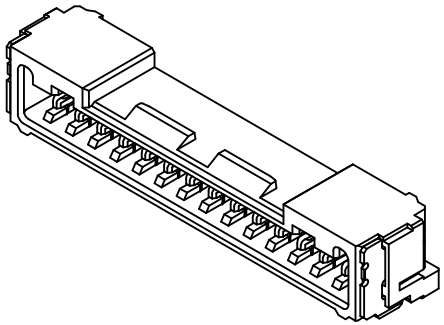

14~16 CKT.

係止形状違い
DIFFERENCE OF LOCK SHAPE

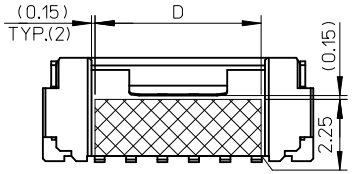

吸着範囲
VACUUM AREA

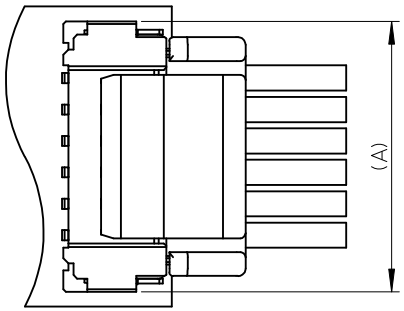

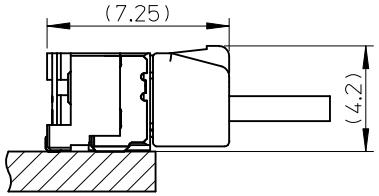

嵌合図
MATED CONNECTORS

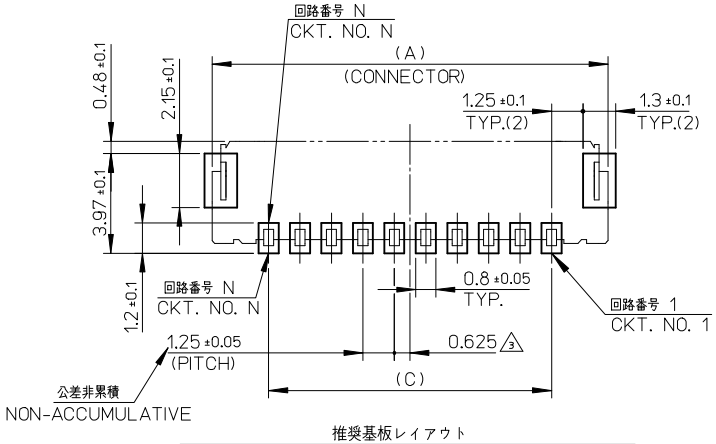

推奨基板レイアウト
RECCOMENDED P.C.B. PATTERN LAYOUT
(参考：メタルマスク厚さ：150μm, マスク開口率100%)
(REFERENCE : MATAL MASK THICKNESS : 150μm, APERTURE RASIO : 100%)

SEE SHEET 1	DESCRIPTION	GENERAL TOLERANCES (UNLESS SPECIFIED)	
EC NO: J2016-0928		0.25 UNDER	±0.03
DRWN:SSATO02 2016/03/29		0.25 OVER 0.5 UNDER	±0.05
CH'KD:KASAKAWA 2016/03/29		0.5 OVER 1.0 UNDER	±0.1
APPR:TKANEKO 2016/03/29		1.0 OVER 10 UNDER	±0.2
		10 OVER 30 UNDER	±0.25
		30 OVER	±0.3
		ANGULAR ±1 °	
B	REV	DRAFT WHERE APPLICABLE MUST REMAIN WITHIN DIMENSIONS	

DIMENSION STYLE: MM ONLY	SCALE: 5:1	DESIGN UNITS: METRIC	THIRD ANGLE PROJECTION
DRAWN BY: SSATO02 DATE: 2013/07/29	TITLE: 1.25 WTB SINGLE SMT RA PLUG ASS'Y		
CHECKED BY: KASAKAWA DATE: 2013/07/30			
APPROVED BY: NUKITA DATE: 2013/08/08	molex		
MATERIAL NO.: SEE SHEET 3	DOCUMENT NO.: SD-504195-002	SHEET NO.: 2 OF 3	
SIZE: A3	THIS DRAWING CONTAINS INFORMATION THAT IS PROPRIETARY TO MOLEX ELECTRONIC TECHNOLOGIES, LLC AND SHOULD NOT BE USED WITHOUT WRITTEN PERMISSION		

ELV AND RoHS COMPLIANT

HSG COLOR ORANGE	HSG COLOR GREEN	HSG COLOR BLUE	HSG COLOR YELLOW	HSG COLOR RED	HSG COLOR BLACK	HSG COLOR NATURAL(BEIGE)	
5041951678	5041951676	5041951674	5041951673	5041951672	5041951671	5041951670	16
5041951578	5041951576	5041951574	5041951573	5041951572	5041951571	5041951570	15
5041951478	5041951476	5041951474	5041951473	5041951472	5041951471	5041951470	14
5041951378	5041951376	5041951374	5041951373	5041951372	5041951371	5041951370	13
5041951278	5041951276	5041951274	5041951273	5041951272	5041951271	5041951270	12
5041951178	5041951176	5041951174	5041951173	5041951172	5041951171	5041951170	11
5041951078	5041951076	5041951074	5041951073	5041951072	5041951071	5041951070	10
5041950978	5041950976	5041950974	5041950973	5041950972	5041950971	5041950970	9
5041950878	5041950876	5041950874	5041950873	5041950872	5041950871	5041950870	8
5041950778	5041950776	5041950774	5041950773	5041950772	5041950771	5041950770	7
5041950678	5041950676	5041950674	5041950673	5041950672	5041950671	5041950670	6
5041950578	5041950576	5041950574	5041950573	5041950572	5041950571	5041950570	5
5041950478	5041950476	5041950474	5041950473	5041950472	5041950471	5041950470	4
5041950378	5041950376	5041950374	5041950373	5041950372	5041950371	5041950370	3
5041950278	5041950276	5041950274	5041950273	5041950272	5041950271	5041950270	2
EMBOSSED TAPE PACKAGE	EMBOSSED TAPE PACKAGE	EMBOSSED TAPE PACKAGE	EMBOSSED TAPE PACKAGE	EMBOSSED TAPE PACKAGE	EMBOSSED TAPE PACKAGE	EMBOSSED TAPE PACKAGE	極数
オーダー番号 ORDER NO.	オーダー番号 ORDER NO.	オーダー番号 ORDER NO.	オーダー番号 ORDER NO.	オーダー番号 ORDER NO.	オーダー番号 ORDER NO.	オーダー番号 ORDER NO.	CKT.NO.

SEE SHEET 1
EC NO: J2016-0928 2016/03/29
DRWN:SSATO02 2016/03/29
CHKD:KASAKAWA 2016/03/29
APPR:TKANEKO 2016/03/29
DESCRIPTION
B
REV

GENERAL TOLERANCES (UNLESS SPECIFIED)

0.25	UNDER			± 0.03
0.25	OVER	0.5	UNDER	± 0.05
0.5	OVER	1.0	UNDER	± 0.1
1.0	OVER	10	UNDER	± 0.2
10	OVER	30	UNDER	± 0.25
30	OVER			± 0.3
ANGULAR	±1 °			

DRAFT WHERE APPLICABLE MUST REMAIN WITHIN DIMENSIONS

DIMENSION STYLE: MM ONLY
SCALE: 5:1
DESIGN UNITS: METRIC
THIRD ANGLE PROJECTION

DRAWN BY: SSATO02 DATE: 2013/07/29
CHECKED BY: KASAKAWA DATE: 2013/07/30
APPROVED BY: NUKITA DATE: 2013/08/08
MATERIAL NO.: SEE CHART

TITLE: 1.25 WTB SINGLE SMT RA PLUG ASS'Y

molex

DOCUMENT NO.: SD-504195-002
SHEET NO.: 3 OF 3
SIZE: A3

THIS DRAWING CONTAINS INFORMATION THAT IS PROPRIETARY TO MOLEX ELECTRONIC TECHNOLOGIES, LLC AND SHOULD NOT BE USED WITHOUT WRITTEN PERMISSION