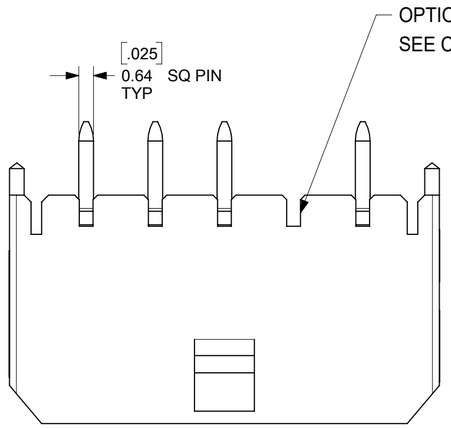


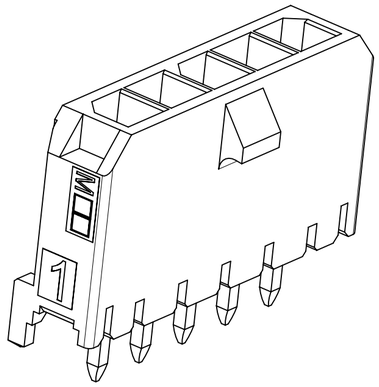

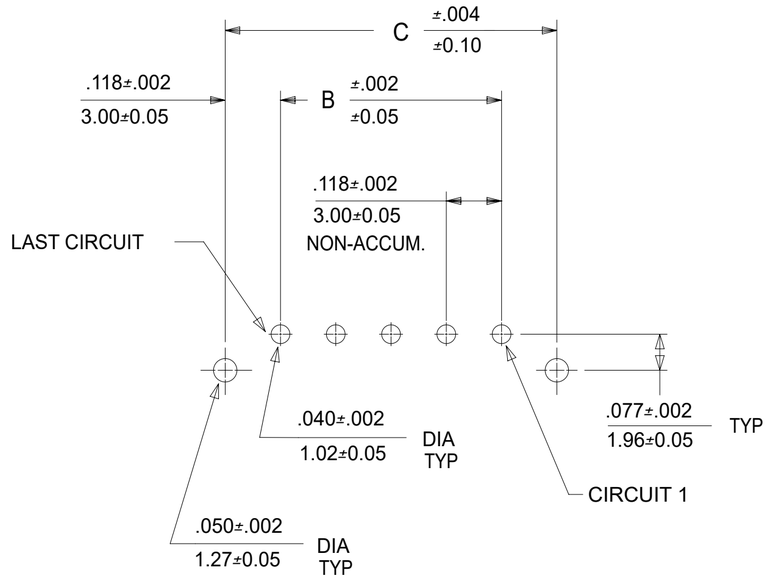


PCB LAYOUT: COMPONENT SIDE
RECOMMENDED PCB THICKNESS: .062/1.57

| CKTS | A | B | C |
|---|---|---|---|
| 2 | .380<br>9.65 | .118<br>3.00 | .354<br>9.00 |
| 3 | .498<br>12.65 | .236<br>6.00 | .472<br>12.00 |
| 4 | .616<br>15.65 | .354<br>9.00 | .591<br>15.00 |
| 5 | .734<br>18.64 | .472<br>12.00 | .709<br>18.00 |
| 6 | .852<br>21.64 | .591<br>15.00 | .827<br>21.00 |
| 7 | .970<br>24.64 | .709<br>18.00 | .945<br>24.00 |
| 8 | 1.088<br>27.64 | .827<br>21.00 | 1.063<br>27.00 |
| 9 | 1.206<br>30.63 | .945<br>24.00 | 1.181<br>30.00 |
| 10 | 1.325<br>33.66 | 1.063<br>27.00 | 1.299<br>33.00 |
| 11 | 1.443<br>36.65 | 1.181<br>30.00 | 1.417<br>36.00 |
| 12 | 1.561<br>39.65 | 1.299<br>33.00 | 1.535<br>39.00 |

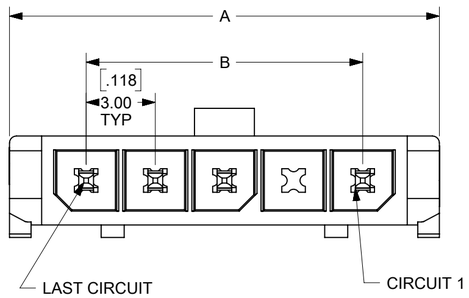


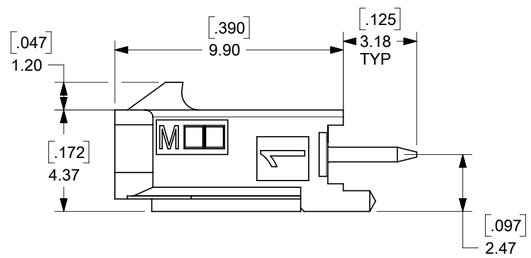


| | FINISH A | VOID |
|---|---|---|
| CKTS | MATERIAL NO: | CKTS |
| 02 | 43650-0227 | N/A |
| 03 | 43650-0327 | |
| 04 | 43650-0427 | |
| 05 | 43650-0527 | |
| 06 | 43650-0627 | |
| 07 | 43650-0727 | |
| 08 | 43650-0827 | |
| 09 | 43650-0927 | |
| 10 | 43650-1027 | |
| 11 | 43650-1127 | |
| 12 | 43650-1227 | |
| 04 | 43650-0451 | 2,3 |
| 05 | 43650-0551 | 2,3,4 |
| 06 | N/A | N/A |
| 10 | 43650-1051 | 2,3,5,6,8,9 |
| 10 | N/A | N/A |

| FINISH B | VOID |
|---|---|
| MATERIAL NO: | CKTS |
| 43650-0228 | N/A |
| 43650-0328 | |
| 43650-0428 | |
| 43650-0528 | |
| 43650-0628 | |
| 43650-0728 | |
| 43650-0828 | |
| 43650-0928 | |
| 43650-1028 | |
| 43650-1128 | |
| 43650-1228 | |
| N/A | N/A |
| 43650-0652 | 2,3,4,5 |
| N/A | N/A |

| FINISH C | VOID |
|---|---|
| MATERIAL NO: | CKTS |
| 43650-0229 | N/A |
| 43650-0329 | |
| 43650-0429 | |
| 43650-0529 | |
| 43650-0629 | |
| 43650-0729 | |
| 43650-0829 | |
| 43650-0929 | |
| 43650-1029 | |
| 43650-1129 | |
| 43650-1229 | |
| N/A | N/A |
| 43650-1053 | 2,4,6,8,9 |
| 43650-1054 | 2,3,5,6,8,9 |

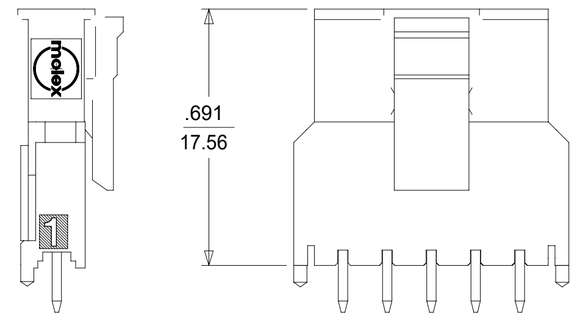


MATED MICRO FIT CONNECTORS

NOTES:

1. HOUSING MATERIAL: LIQUID CRYSTAL POLYMER, GLASS FILLED, UL94V-0, COLOR: BLACK
   TERMINAL MATERIAL: BRASS ALLOY
2. FINISH:
   A = .000060/(0.00152) MIN. REFLOW MATTE TIN OVER .000050/(0.00127) MIN. NICKEL PLATE
   (FINISH IS BRIGHT IN APPEARANCE, THICKNESS AS APPLIED PRIOR TO REFLOW)
   B = .000015/(0.00038) MIN. SELECT GOLD IN CONTACT AREA .000100/(0.00254) MIN. SELECT MATTE TIN ON SOLDER TAILS BOTH OVER .000050/(0.00127) NICKEL OVERALL
   C = .000030/(0.00076) MIN. SELECT GOLD IN CONTACT AREA .000100/(0.00254) MIN. SELECT MATTE TIN ON SOLDER TAILS BOTH OVER .000050/(0.00127) NICKEL OVERALL
3. PRODUCT SPECIFICATION: PS-43650
4. TRAY PACKAGED : SEE MOLEX DRAWING PK-70873-0811
5. MATES WITH MICRO FIT (3.0) RECEPTACLE SERIES 43645
6. PARTS CONFORM TO CLASS 'B' REQUIREMENTS OF COSMETIC SPECIFICATION PS-45499-002.

THIS DRAWING CONTAINS INFORMATION THAT IS PROPRIETARY TO MOLEX ELECTRONIC TECHNOLOGIES, LLC AND SHOULD NOT BE USED WITHOUT WRITTEN PERMISSION

| DIMENSION UNITS | SCALE |
|---|---|
| INCH/MM | NTS |

GENERAL TOLERANCES (UNLESS SPECIFIED)

| | MM | INCH |
|---|---|---|
| 4 PLACES | ± | ± |
| 3 PLACES | ± | ± 0.01 |
| 2 PLACES | ± 0.25 | ± |
| 1 PLACE | ± 0.36 | ± |
| 0 PLACES | ± | ± |
| ANGULAR TOL | ± 0.5 ° | |

DRAFT WHERE APPLICABLE MUST REMAIN WITHIN DIMENSIONS

CURRENT REV DESC:

EC NO: 833126
DRWN: ZIXUAQ 2025/09/02
CHK'D: XQZHANG 2025/09/03
APPR: XQZHANG 2025/09/03

INITIAL REVISION:
DRWN: KSAMIEC 2000/11/15
APPR: REDGLEY 2000/11/28

THIRD ANGLE PROJECTION | DRAWING: C-SIZE | SERIES: 43650

molex

MICRO FIT (3.0)
SINGLE ROW / VERTICAL THRU HOLE / PEGS / TRAY

PRODUCT CUSTOMER DRAWING

| DOCUMENT NUMBER | DOC TYPE | DOC PART | REVISION |
|---|---|---|---|
| SD-43650-010 | PSD | 001 | E |

| MATERIAL NUMBER | CUSTOMER | SHEET NUMBER |
|---|---|---|
| SEE CHART | GENERAL MARKET | 1 OF 1 |

| DOCUMENT STATUS | P1 | RELEASE DATE | 2025/09/03 02:37:27 |
|---|---|---|---|

FORMAT: Eng-legal-master-tb-prod-C
REVISION: E1
DATE: 2021/05/01