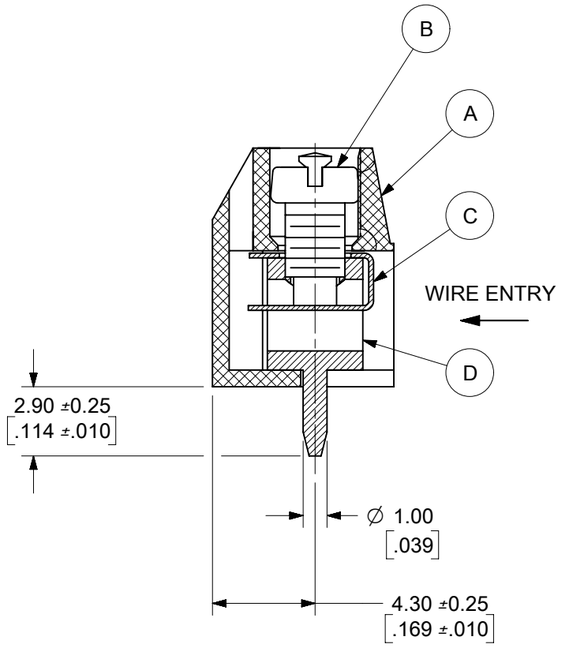

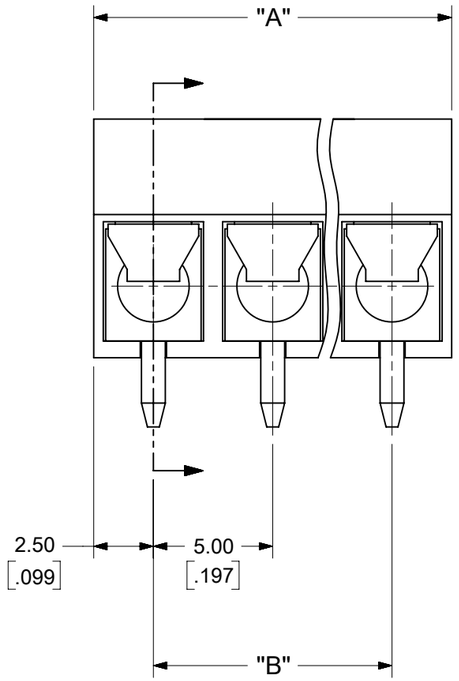

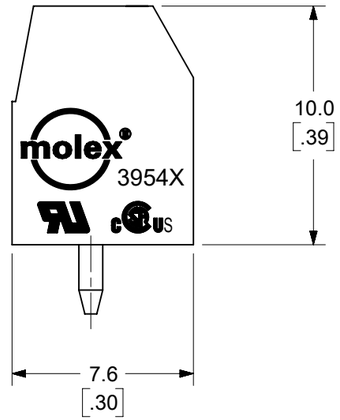

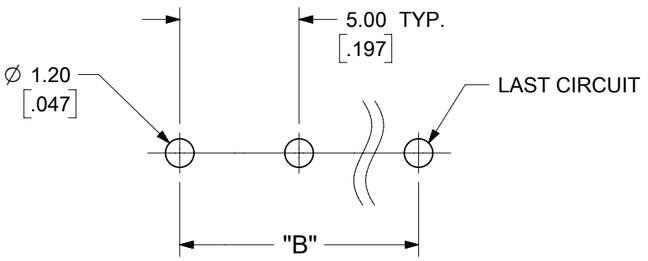

PCB LAYOUT

SPECIFICATIONS

1. MATERIAL:
   (A). BODY: NYLON (PA66), UL94 V-0, COLOR: SEE SHEET-2
   (B). SCREW: STEEL, M2.5, ZINC PLATED
   (C). CONTACT: BRASS, NICKEL PLATED
   (D). TERMINAL BLOCK: BRASS, TIN PLATED
2. WIRE RATING: 22-14 AWG
3. ELECTRICAL RATING: 300V, 15A
4. POWER-FREQUENCY WITHSTAND: AC 2500V/1 MIN
5. INSULATION RESISTANCE: DC500V 500MΩ OR ABOVE
6. RATED IMPULSE VOLTAGE: 4000V/MINUS AND PLUS 5 TIMES EACH
7. WIRE STRIP LENGTH: 7.0mm [.28inch]
8. SCREW TORQUE (MAX): 0.34 N.m (3.0 lbf.in)
9. OPERATING TEMPERATURE: -40°C TO +105°C
10. NUMBER OF CIRCUITS: 2 TO 24, SEE SHEET-2

TOLERANCES			
MM	TOL	INCH	TOL
0-6	±0.25	0-.24	±.010
>6-30	±0.40	.24-1.18	±.016
>30-120	±0.50	1.18-4.76	±.020
>120	±0.80	>4.76	±.031

FUNCTIONAL SYMBOLS
EA = 0
EC = 0
EP = 0
DIVISIONAL SYMBOLS

DIMENSION UNITS: MM/INCH | SCALE: 4:1

GENERAL TOLERANCES (UNLESS SPECIFIED)

	MM	INCH
4 PLACES	± ---	± ---
3 PLACES	± ---	± SEE CHART
2 PLACES	± SEE CHART	± SEE CHART
1 PLACE	± SEE CHART	± ---
0 PLACES	± ---	± ---
ANGULAR TOL	± ---	

DRAFT WHERE APPLICABLE MUST REMAIN WITHIN DIMENSIONS

THIS DRAWING CONTAINS INFORMATION THAT IS PROPRIETARY TO MOLEX ELECTRONIC TECHNOLOGIES, LLC AND SHOULD NOT BE USED WITHOUT WRITTEN PERMISSION

CURRENT REV DESC: MIGRATED TO ECTR/NX & ADDED PCB LAYOUT

EC NO: 637366
DRWN: ABENJAMINLW 2020/04/14
CHK'D: DACHAMMER 2020/05/18
APPR: JFMURPHY 2020/05/29

INITIAL REVISION:
DRWN: LROTHAUS 2006/01/09
APPR: JPAWLICK 2006/01/10

THIRD ANGLE PROJECTION | DRAWING: B-SIZE | SERIES: 39543

molex

EURO TERMINAL BLOCK
5.00MM (.197) PITCH PC MOUNT, LOW PROFILE

PRODUCT CUSTOMER DRAWING

DOCUMENT NUMBER	DOC TYPE	DOC PART	REVISION
SD-39543-004	PSD	001	B2

MATERIAL NUMBER	CUSTOMER	SHEET NUMBER
SEE SHEET-2	GENERAL MARKET	1 OF 2

DOCUMENT STATUS	P1	RELEASE DATE	2020/05/29 16:35:52

FORMAT: Eng-lega-master-tb-prod-B
REVISION: E
DATE: 2020/01/14

CIRCUIT SIZE	MATERIAL NUMBERS MOLDED TO LENGTH						DIMENSIONAL INFORMATION			
	BLACK			GREEN						
	100% TIN			100% TIN						
	PRINTING OPTIONS			PRINTING OPTIONS			DIM. "A"		DIM. "B"	
	None	10A	11A	None	10A	11A	mm	inch	mm	inch
2	395430602	395431602	395432602	395930602	395931602	395932602	10.0	.39	5.00	.197
3	395430603	395431603	395432603	395930603	395931603	395932603	15.0	.59	10.00	.394
4	395430604	395431604	395432604	395930604	395931604	395932604	20.0	.79	15.00	.591
5	395430605	395431605	395432605	395930605	395931605	395932605	25.0	.98	20.00	.787
6	395430606	395431606	395432606	395930606	395931606	395932606	30.0	1.18	25.00	.984
7	395430607	395431607	395432607	395930607	395931607	395932607	35.0	1.38	30.00	1.181
8	395430608	395431608	395432608	395930608	395931608	395932608	40.0	1.57	35.00	1.378
9	395430609	395431609	395432609	395930609	395931609	395932609	45.0	1.77	40.00	1.575
10	395430610	395431610	395432610	395930610	395931610	395932610	50.0	1.97	45.00	1.772
11	395430611	395431611	395432611	395930611	395931611	395932611	55.0	2.17	50.00	1.969
12	395430612	395431612	395432612	395930612	395931612	395932612	60.0	2.36	55.00	2.165
13	395430613	395431613	395432613	395930613	395931613	395932613	65.0	2.56	60.00	2.362
14	395430614	395431614	395432614	395930614	395931614	395932614	70.0	2.76	65.00	2.559
15	395430615	395431615	395432615	395930615	395931615	395932615	75.0	2.95	70.00	2.756
16	395430616	395431616	395432616	395930616	395931616	395932616	80.0	3.15	75.00	2.953
17	395430617	395431617	395432617	395930617	395931617	395932617	85.0	3.35	80.00	3.150
18	395430618	395431618	395432618	395930618	395931618	395932618	90.0	3.54	85.00	3.346
19	395430619	395431619	395432619	395930619	395931619	395932619	95.0	3.74	90.00	3.543
20	395430620	395431620	395432620	395930620	395931620	395932620	100.0	3.94	95.00	3.740
21	395430621	395431621	395432621	395930621	395931621	395932621	105.0	4.13	100.00	3.937
22	395430622	395431622	395432622	395930622	395931622	395932622	110.0	4.33	105.00	4.134
23	395430623	395431623	395432623	395930623	395931623	395932623	115.0	4.53	110.00	4.331
24	395430624	395431624	395432624	395930624	395931624	395932624	120.0	4.72	115.00	4.528

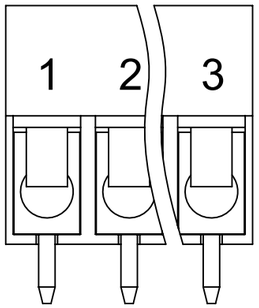

REF. 10A PRINT OPT.

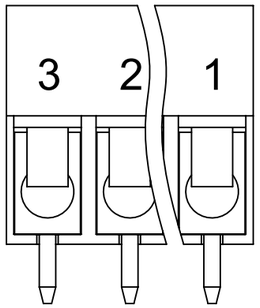

REF. 11A PRINT OPT.

TOLERANCES			
MM	TOL	INCH	TOL
0-6	±0.25	0-.24	±.010
>6-30	±0.40	.24-1.18	±.016
>30-120	±0.50	1.18-4.76	±.020
>120	±0.80	>4.76	±.031

FUNCTIONAL SYMBOLS
E/W = 0
E/F = 0
E/P = 0
DIVISIONAL SYMBOLS

DIMENSION UNITS: MM/INCH
SCALE: 3:1

GENERAL TOLERANCES (UNLESS SPECIFIED)

	MM	INCH
4 PLACES	± ---	± ---
3 PLACES	± ---	± SEE CHART
2 PLACES	± SEE CHART	± SEE CHART
1 PLACE	± SEE CHART	± ---
0 PLACES	± ---	± ---
ANGULAR TOL	± ---	

DRAFT WHERE APPLICABLE MUST REMAIN WITHIN DIMENSIONS

THIS DRAWING CONTAINS INFORMATION THAT IS PROPRIETARY TO MOLEX ELECTRONIC TECHNOLOGIES, LLC AND SHOULD NOT BE USED WITHOUT WRITTEN PERMISSION

CURRENT REV DESC: MIGRATED TO ECTR/NX & ADDED PCB LAYOUT

EC NO: 637366
DRWN: ABENJAMINLW 2020/04/14
CHK'D: DACHAMMER 2020/05/18
APPR: JFMURPHY 2020/05/29

INITIAL REVISION:
DRWN: LROTHAUS 2006/01/09
APPR: JPAWLICK 2006/01/10

THIRD ANGLE PROJECTION | DRAWING: B-SIZE | SERIES: 39543

molex

EURO TERMINAL BLOCK
5.00MM (.197) PITCH PC MOUNT, LOW PROFILE

PRODUCT CUSTOMER DRAWING

DOCUMENT NUMBER	DOC TYPE	DOC PART	REVISION
SD-39543-004	PSD	001	B2

MATERIAL NUMBER	CUSTOMER	SHEET NUMBER
SEE CHART	GENERAL MARKET	2 OF 2

DOCUMENT STATUS	P1	RELEASE DATE	2020/05/29 16:35:52

FORMAT: Eng-lega-master-tb-prod-B
REVISION: E
DATE: 2020/01/14