PRODUCT
PN-XXXXX-XXXX

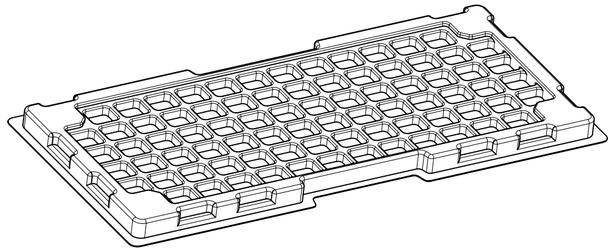

80 SETS PER TRAY
P/N: 89707-0190

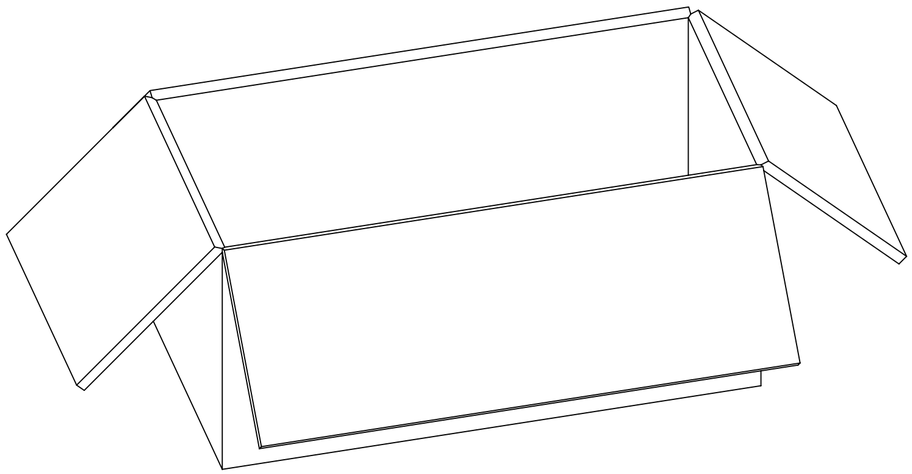

1600 SETS PER INNER
CARTON BOX
P/N: 96707-0001

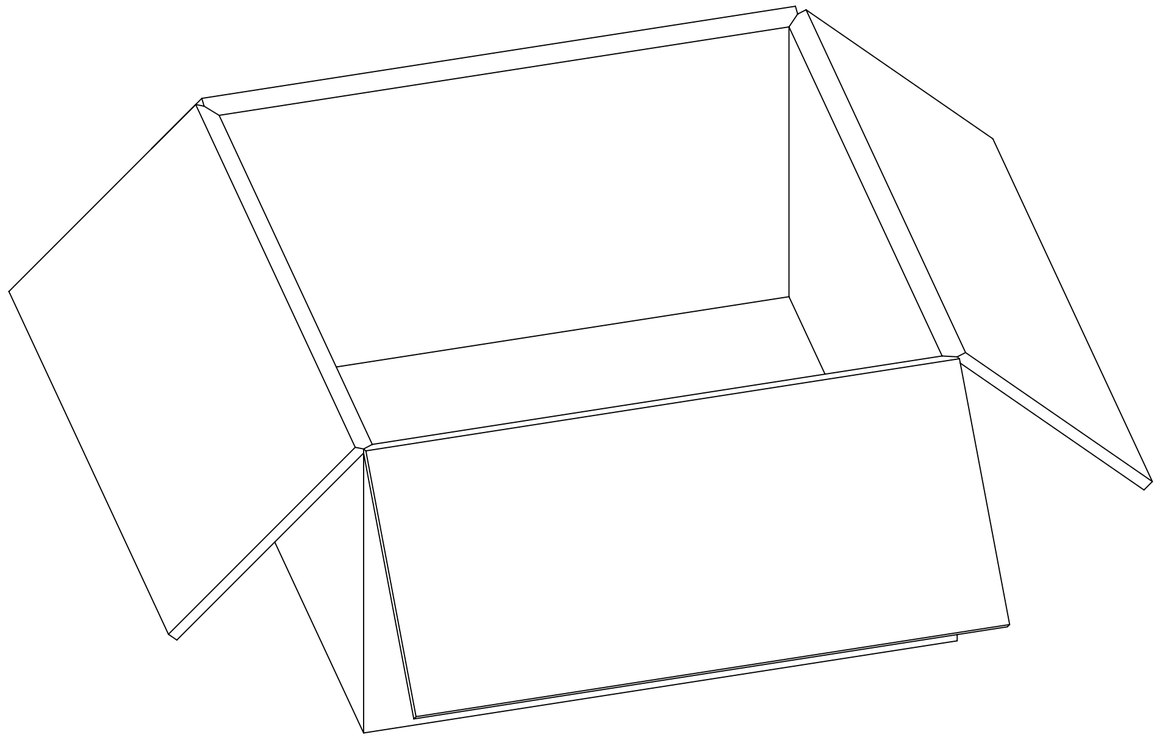

3200 SETS PER OUTER
CARTON BOX
P/N: 96708-0005

THIS DRAWING CONTAINS INFORMATION THAT IS PROPRIETARY TO MOLEX ELECTRONIC TECHNOLOGIES, LLC AND SHOULD NOT BE USED WITHOUT WRITTEN PERMISSION

FUNCTIONAL SYMBOLS	FA = 0, FC = 0, FP = 0
DIVISIONAL SYMBOLS	
DIMENSION UNITS	MM
SCALE	NTS
GENERAL TOLERANCES (UNLESS SPECIFIED)	
ANGULAR TOL	± 0.5°
4 PLACES	±
3 PLACES	±
2 PLACES	±
1 PLACE	±
0 PLACES	±
DRAFT WHERE APPLICABLE MUST REMAIN WITHIN DIMENSIONS	

CURRENT REV DESC: PACKING PART

STATUS: Design Approved
DRWN: Jason YS Su 2024-01-15
CHK'D: Darry Cheng 2024-01-17
APPR: Darry Cheng 2024-01-17

THIRD ANGLE PROJECTION | DRAWING: C-SIZE | SERIES: 89542

molex

PACKAGING SPECIFICATION (TRAY 0190)

PRODUCT SALES DRAWING

DOCUMENT NUMBER	DOC TYPE	DOC PART	REVISION
895420040	PSD	000	A1

MATERIAL NUMBER	CUSTOMER	SHEET NUMBER
------		1 OF 1

FORMAT: TC-tb-prod-C
REVISION: B
DATE: 2022/08/01

MATERIALS AND FINISHES:

BODY, CENTER CONTACT: BRASS
FINISH: GOLD (5 µ-in MIN) OVER NICKEL PHOSPHOR (80 µ-in MIN)

INSULATOR: LCP

KAPTON TAPE (-0092 ONLY): POLYIMIDE
COLOR AMBER

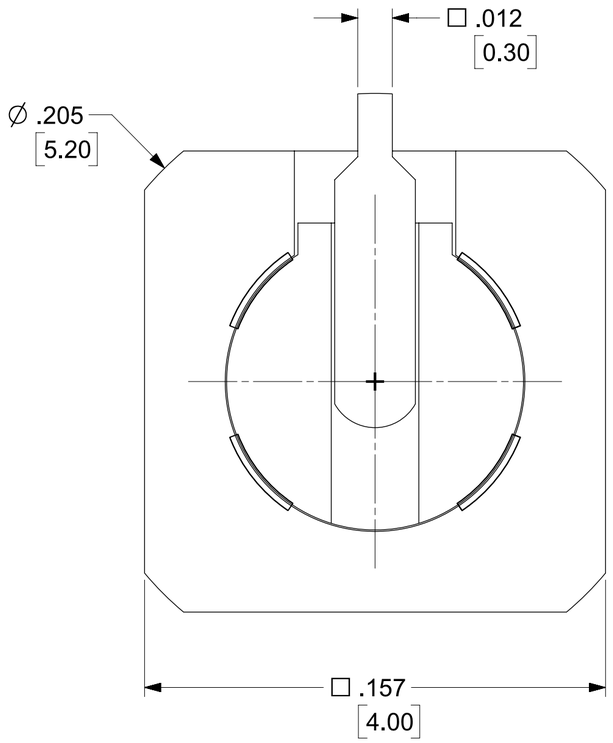

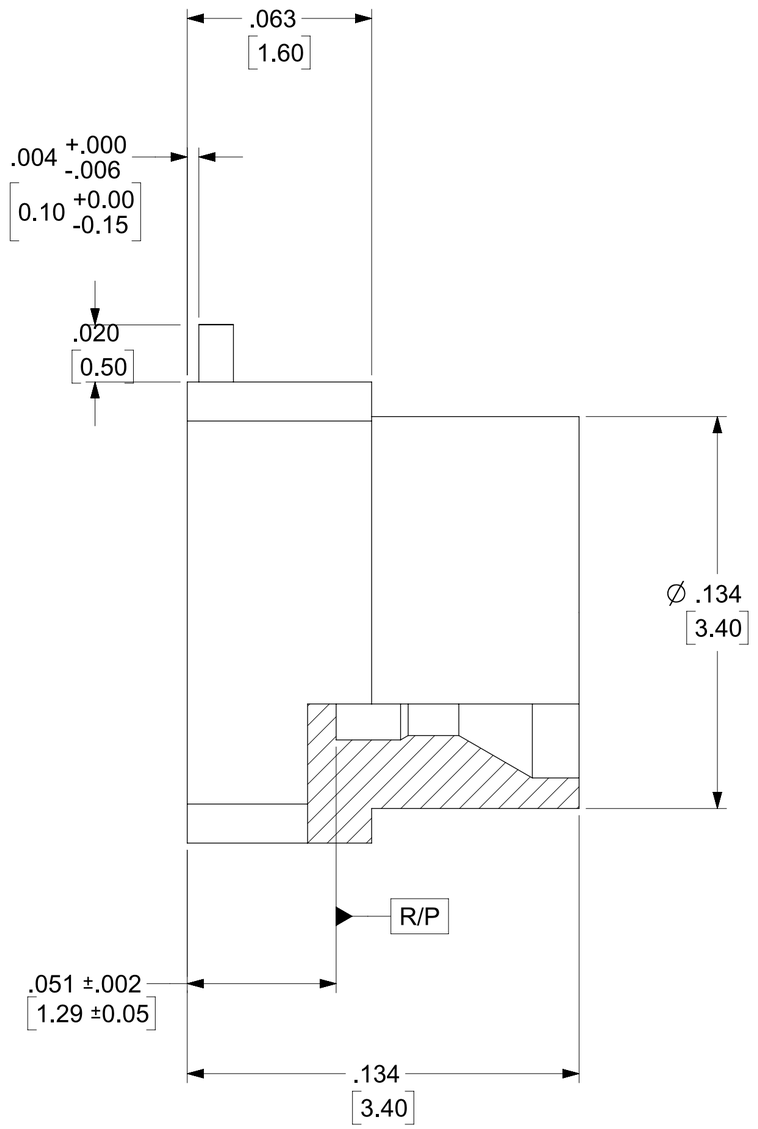

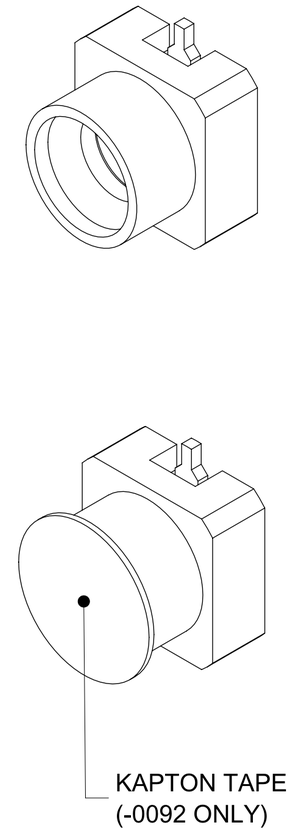

73300-0092	73300-0090 TAPE & REEL WITH KAPTON TAPE	SHEET 3, 4, & 5
73300-0091	73300-0090 TAPE & REEL WITHOUT KAPTON TAPE	
73300-0090	73300-0090 TRAY	895420040
PART NO.	DESCRIPTION	PACKING SPEC

MIL- STD-384B, FIG 328-2	INTERFACE
SPECIFICATION	DESCRIPTION

THIS DRAWING CONTAINS INFORMATION THAT IS PROPRIETARY TO MOLEX ELECTRONIC TECHNOLOGIES, LLC AND SHOULD NOT BE USED WITHOUT WRITTEN PERMISSION

DIMENSION UNITS: INCH/MM
SCALE: NTS

GENERAL TOLERANCES (UNLESS SPECIFIED)

	MM	INCH
4 PLACES	±	±
3 PLACES	±	± 0.0050
2 PLACES	± 0.130	± 0.010
1 PLACE	± 0.25	±
0 PLACES	±	±
ANGULAR TOL	± 2°	

DRAFT WHERE APPLICABLE MUST REMAIN WITHIN DIMENSIONS

CURRENT REV DESC: REV. B4: MIGRATION VERSION
REV. B5: ADD PACKING SPEC TO EACH P/N

STATUS: Production
DRWN: Ricky Yeh 2024-03-29
CHK'D: Joanne Liao 2024-04-16
APPR: Darry Cheng 2024-04-16

INITIAL REVISION:
DRWN: JLEE 2011/08/02
APPR: JWIENER 2011/08/08

THIRD ANGLE PROJECTION | DRAWING: C-SIZE | SERIES: 73300

molex

SMPM, PLUG VERTICAL PCB
FULL DETENT, SMT 50 OHM EWR-13431, SMPM-PCB

PRODUCT SALES DRAWING

DOCUMENT NUMBER	DOC TYPE	DOC PART	REVISION
SD-73300-009	PSD	001	B5

MATERIAL NUMBER	CUSTOMER	SHEET NUMBER
SEE TABLE		1 OF 5

FORMAT: Eng4ega-TC4b-prod-C
REVISION: B
DATE: 2023/10/23

PCB CONNECTOR LAUNCH / PAD (FOR REFERENCE ONLY)

ALL HATCHED SURFACES SHOWN BELOW ARE COPPER (Cu)

MOUNTING & SIGNAL LAYER
(LAYER 1)

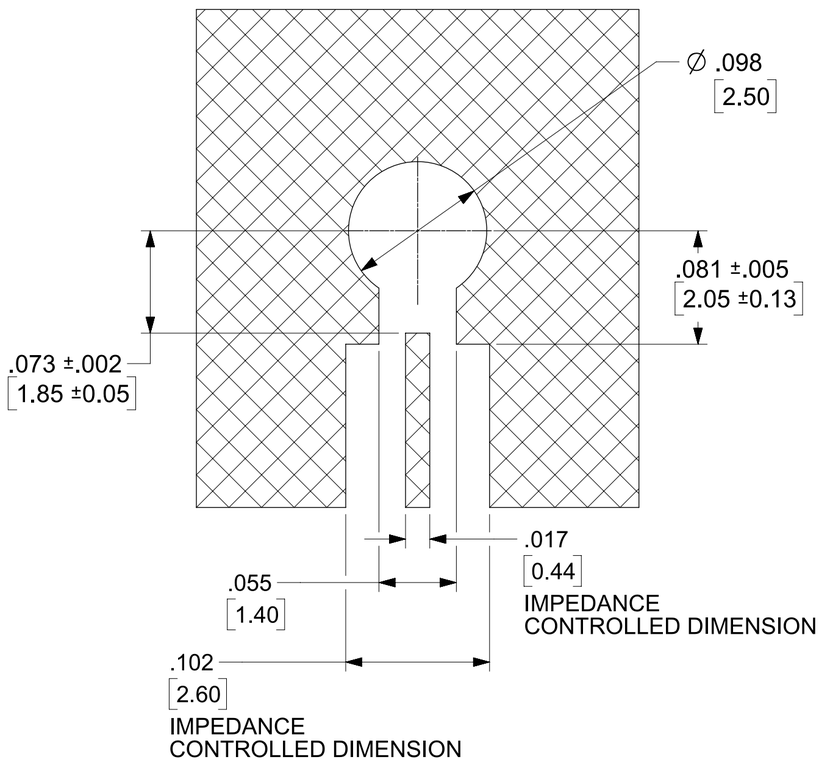

REFERENCE LAYER
(LAYER 2)

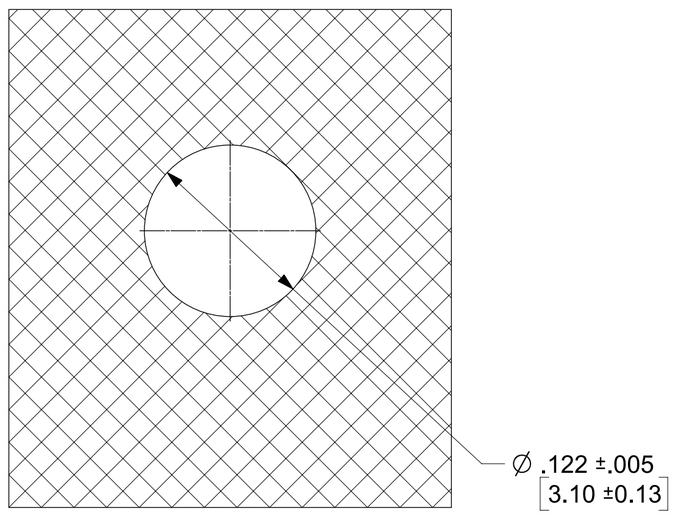

SUBSEQUENT LAYERS

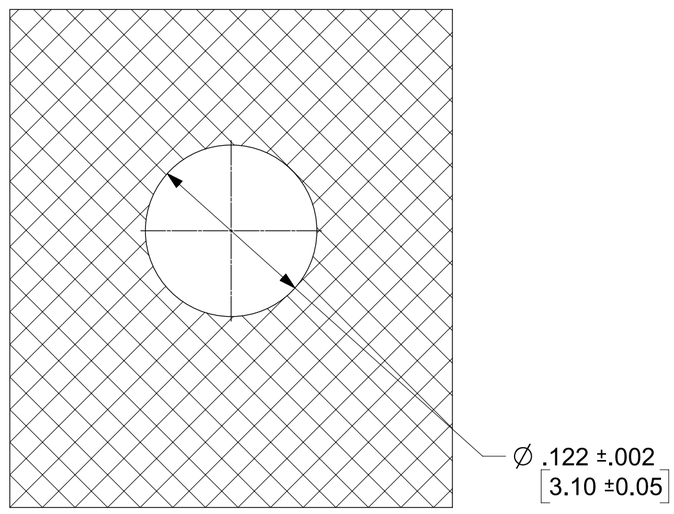

VIAS AND DRILL HOLE

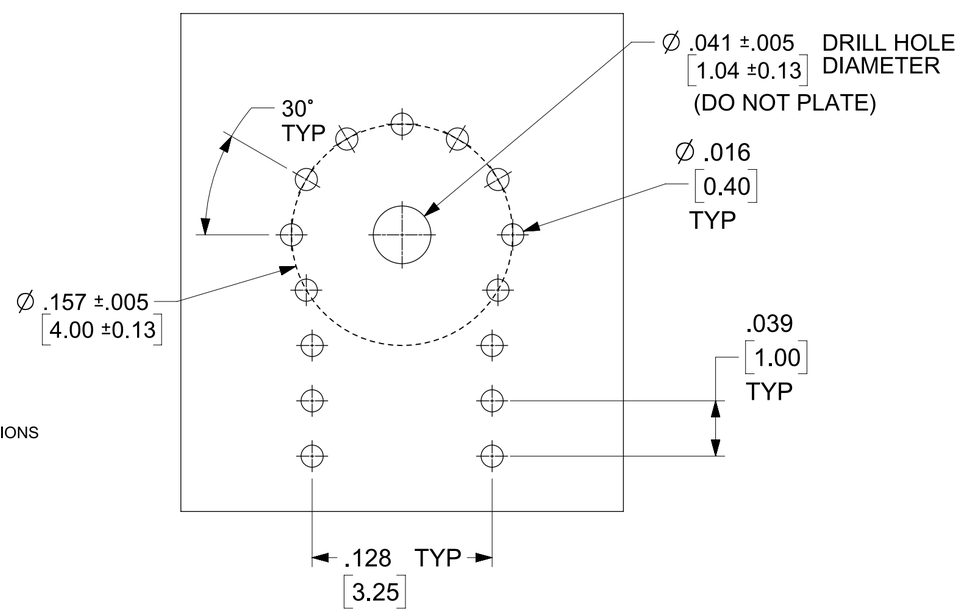

SOLDER MASK

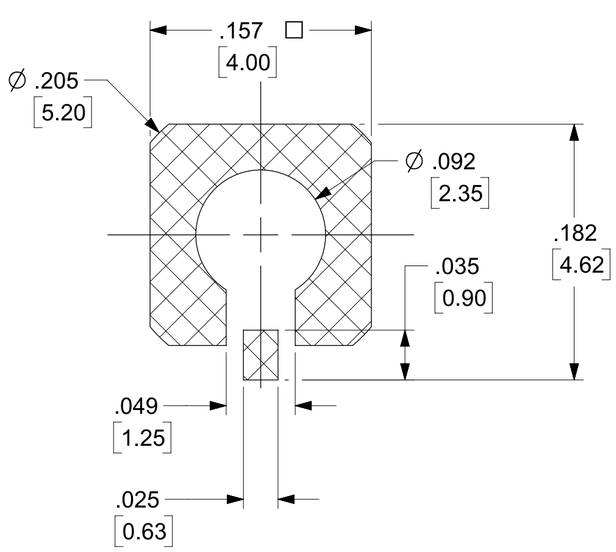

PCB STACK UP

LAYER	MATERIAL	Dk	THICKNESS (mil)
1	Copper + PLATING		2.1
	FR4	4.3	10.0
2	Copper		0.6
	FR4	4.3	10.0
3	Copper		0.6
	FR4	4.3	10.0
4*	Copper		0.6

* SUBSEQUENT LAYERS MAY BE ADDED AS REQUIRED FOR INDIVIDUAL APPLICATIONS

TYPICAL PERFORMANCE CHARACTERISTICS WITH CONNECTOR AND PCB LAUNCH SHOWN

VSWR (FULLY MATED)	FREQUENCY BAND
1.4	DC TO 18 GHz

VARYING PCB STACKUPS AND PCB LAUNCH WILL RESULT IN VARYING RESULTS
CONTACT MOLEX RF / MICROWAVE FOR APPLICATION SPECIFIC ASSISTANCE

THIS DRAWING CONTAINS INFORMATION THAT IS PROPRIETARY TO MOLEX ELECTRONIC TECHNOLOGIES, LLC AND SHOULD NOT BE USED WITHOUT WRITTEN PERMISSION

DIMENSION UNITS: INCH/MM | SCALE: NTS

GENERAL TOLERANCES (UNLESS SPECIFIED)

	MM	INCH
4 PLACES	±	±
3 PLACES	±	± 0.0050
2 PLACES	± 0.130	± 0.010
1 PLACE	± 0.25	±
0 PLACES	±	±
ANGULAR TOL	± 2°	

DRAFT WHERE APPLICABLE MUST REMAIN WITHIN DIMENSIONS

CURRENT REV DESC: REV. B4: MIGRATION VERSION
REV. B5: ADD PACKING SPEC TO EACH P/N

STATUS: Production
DRWN: Ricky Yeh 2024-03-29
CHK'D: Joanne Liao 2024-04-16
APPR: Darry Cheng 2024-04-16

INITIAL REVISION:
DRWN: JLEE 2011/08/02
APPR: JWIENER 2011/08/08

molex

SMPM, PLUG VERTICAL PCB
FULL DETENT, SMT 50 OHM EWR-13431, SMPM-PCB

PRODUCT SALES DRAWING

DOCUMENT NUMBER	DOC TYPE	DOC PART	REVISION
SD-73300-009	PSD	001	B5

THIRD ANGLE PROJECTION	DRAWING	SERIES	MATERIAL NUMBER	CUSTOMER	SHEET NUMBER
	C-SIZE	73300	SEE TABLE		2 OF 5

FORMAT: EngMgr-TC4b-prod-C
REVISION: B
DATE: 2023/10/23

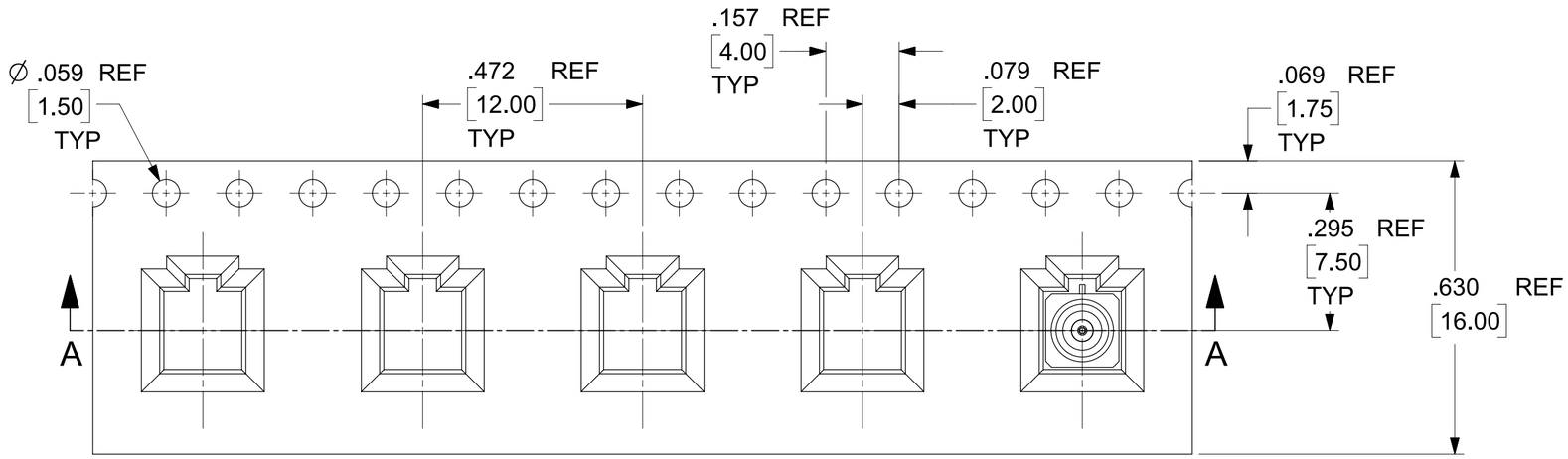

VIEWS FOR 73300-0091

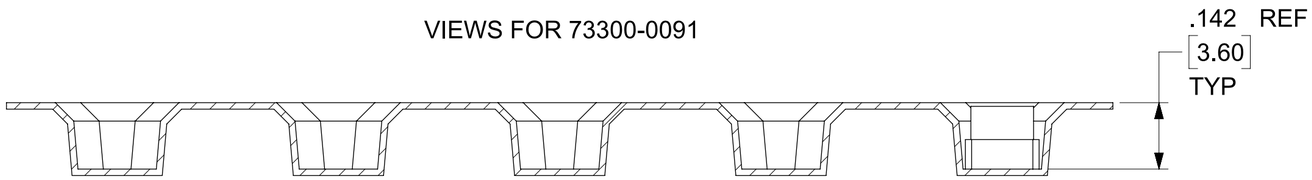

SECTION A-A

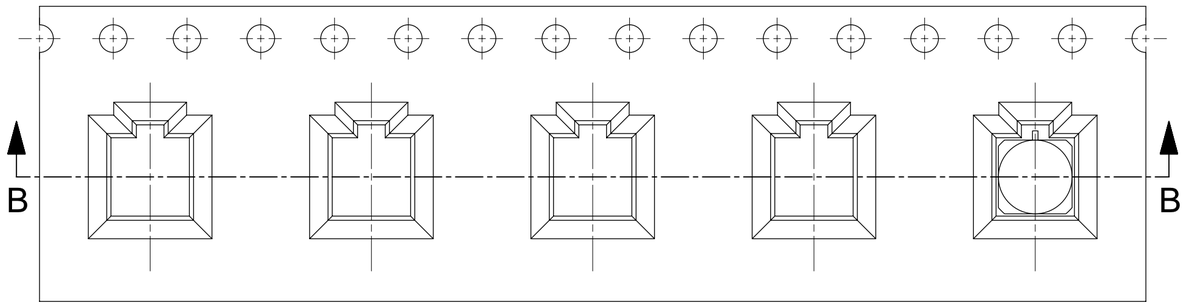

VIEWS FOR 73300-0092

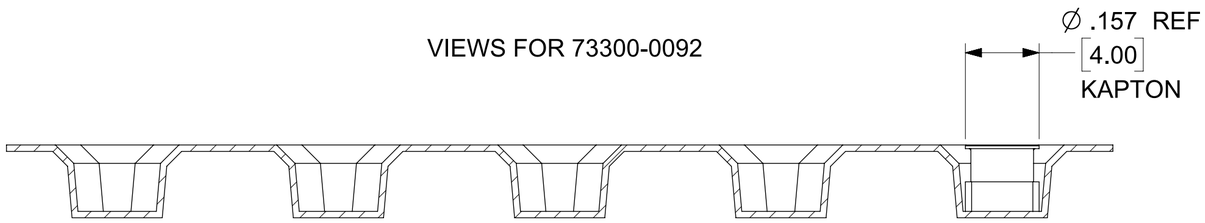

SECTION B-B

THIS DRAWING CONTAINS INFORMATION THAT IS PROPRIETARY TO MOLEX ELECTRONIC TECHNOLOGIES, LLC AND SHOULD NOT BE USED WITHOUT WRITTEN PERMISSION

DIMENSION UNITS	SCALE
INCH/MM	NTS

GENERAL TOLERANCES (UNLESS SPECIFIED)

	MM	INCH
4 PLACES	±	±
3 PLACES	±	± 0.0050
2 PLACES	± 0.130	± 0.010
1 PLACE	± 0.25	±
0 PLACES	±	±
ANGULAR TOL	± 2°	

DRAFT WHERE APPLICABLE MUST REMAIN WITHIN DIMENSIONS

CURRENT REV DESC: REV. B4: MIGRATION VERSION
REV. B5: ADD PACKING SPEC TO EACH P/N

STATUS: Production
DRWN: Ricky Yeh 2024-03-29
CHK'D: Joanne Liao 2024-04-16
APPR: Darry Cheng 2024-04-16

INITIAL REVISION:
DRWN: JLEE 2011/08/02
APPR: JWIENER 2011/08/08

molex

SMPM, PLUG VERTICAL PCB
FULL DETENT, SMT 50 OHM EWR-13431, SMPM-PCB

PRODUCT SALES DRAWING

DOCUMENT NUMBER	DOC TYPE	DOC PART	REVISION
SD-73300-009	PSD	001	B5

THIRD ANGLE PROJECTION	DRAWING	SERIES	MATERIAL NUMBER	CUSTOMER	SHEET NUMBER
	C-SIZE	73300	SEE TABLE		3 OF 5

FORMAT: EngAngle=TC=Eprint=C
REVISION: B
DATE: 2023/10/23

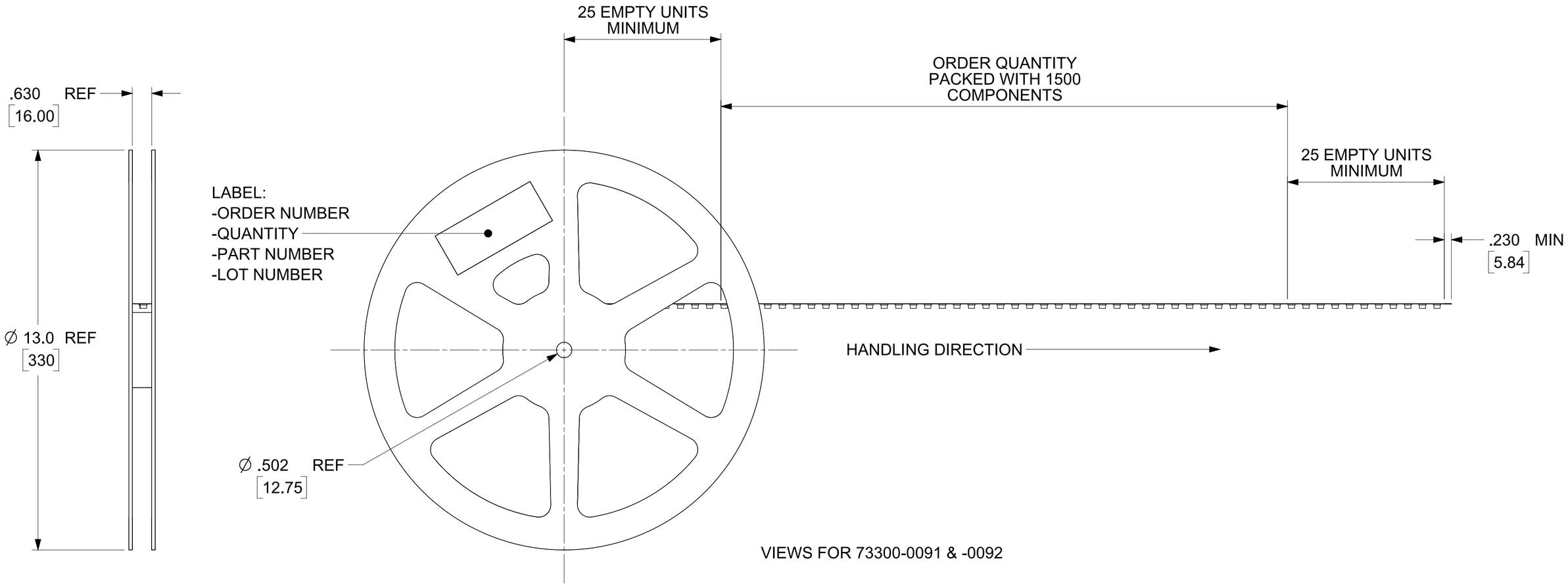

VIEWS FOR 73300-0091 & -0092

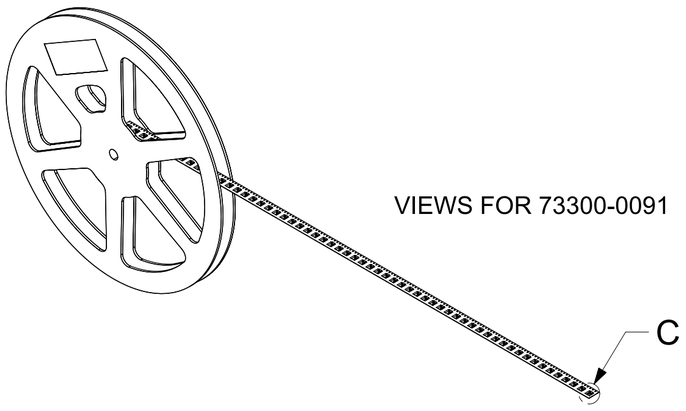

VIEWS FOR 73300-0091

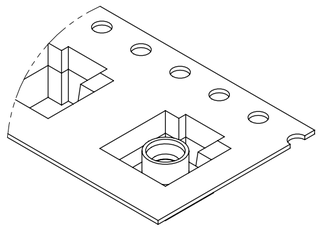

DETAIL C

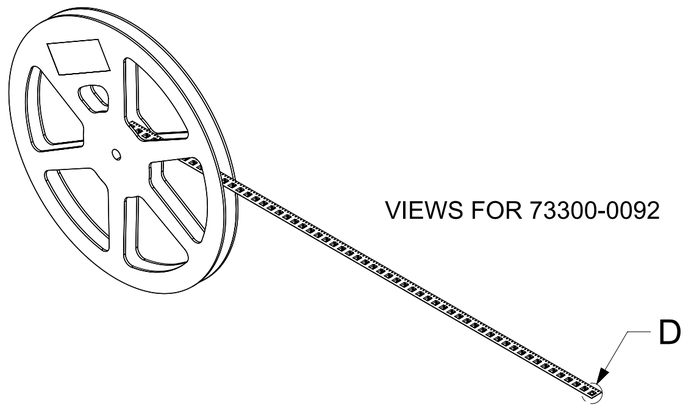

VIEWS FOR 73300-0092

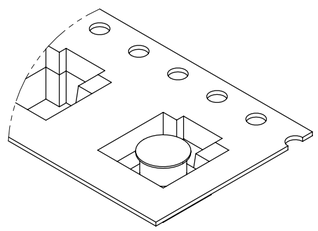

DETAIL D

THIS DRAWING CONTAINS INFORMATION THAT IS PROPRIETARY TO MOLEX ELECTRONIC TECHNOLOGIES, LLC AND SHOULD NOT BE USED WITHOUT WRITTEN PERMISSION

DIMENSION UNITS	SCALE
INCH/MM	NTS

GENERAL TOLERANCES (UNLESS SPECIFIED)

	MM	INCH
4 PLACES	±	±
3 PLACES	±	± 0.0050
2 PLACES	± 0.130	± 0.010
1 PLACE	± 0.25	±
0 PLACES	±	±
ANGULAR TOL	± 2°	

DRAFT WHERE APPLICABLE MUST REMAIN WITHIN DIMENSIONS

CURRENT REV DESC: REV. B4: MIGRATION VERSION
REV. B5: ADD PACKING SPEC TO EACH P/N

STATUS: Production
DRWN: Ricky Yeh 2024-03-29
CHK'D: Joanne Liao 2024-04-16
APPR: Darry Cheng 2024-04-16

INITIAL REVISION:
DRWN: JLEE 2011/08/02
APPR: JWIENER 2011/08/08

THIRD ANGLE PROJECTION | DRAWING: C-SIZE | SERIES: 73300

molex

SMPM, PLUG VERTICAL PCB
FULL DETENT, SMT 50 OHM EWR-13431, SMPM-PCB

PRODUCT SALES DRAWING

DOCUMENT NUMBER	DOC TYPE	DOC PART	REVISION
SD-73300-009	PSD	001	B5

MATERIAL NUMBER	CUSTOMER	SHEET NUMBER
SEE TABLE		4 OF 5

FORMAT: EngAlega-TC4b-prod-C
REVISION: B
DATE: 2023/10/23

P/N: 73300-0091
1500 X 73300-0090 PER REEL
WITHOUT KAPTON TAPE



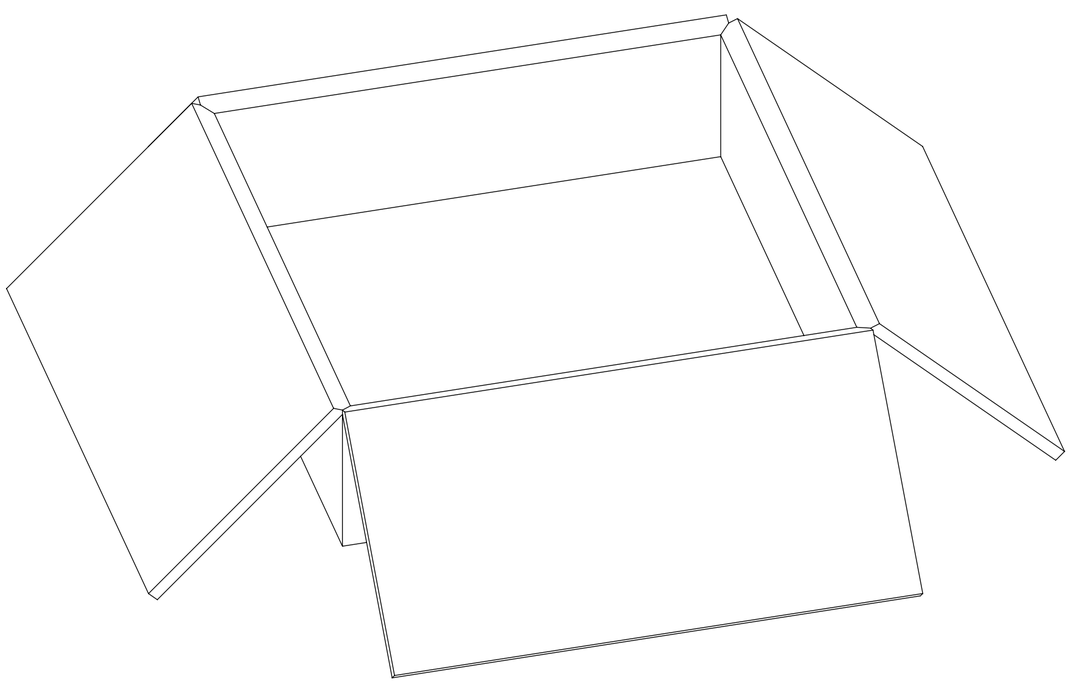

2 REELS PER CARTON BOX
1500 X 2 = 3000 SETS

P/N: 73300-0092
1500 X 73300-0090 PER REEL
WITH KAPTON TAPE



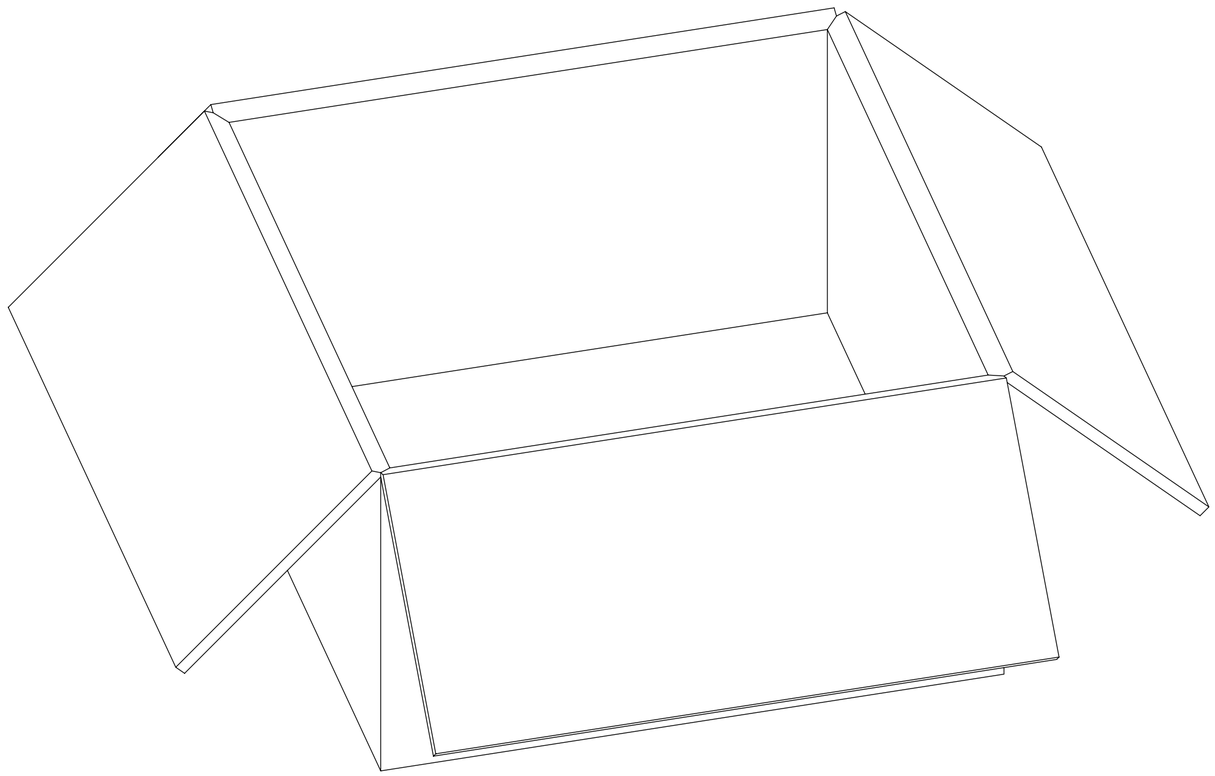

7 REELS PER CARTON BOX
1500 X 7 = 10500 SETS

THIS DRAWING CONTAINS INFORMATION THAT IS PROPRIETARY TO MOLEX ELECTRONIC TECHNOLOGIES, LLC AND SHOULD NOT BE USED WITHOUT WRITTEN PERMISSION

DIMENSION UNITS	SCALE
INCH/MM	NTS

GENERAL TOLERANCES (UNLESS SPECIFIED)

	MM	INCH
4 PLACES	±	±
3 PLACES	±	± 0.0050
2 PLACES	± 0.130	± 0.010
1 PLACE	± 0.25	±
0 PLACES	±	±
ANGULAR TOL	± 2°	

DRAFT WHERE APPLICABLE MUST REMAIN WITHIN DIMENSIONS

CURRENT REV DESC: REV. B4: MIGRATION VERSION
REV. B5: ADD PACKING SPEC TO EACH P/N

STATUS: Production
DRWN: Ricky Yeh 2024-03-29
CHK'D: Joanne Liao 2024-04-16
APPR: Darry Cheng 2024-04-16

INITIAL REVISION:
DRWN: JLEE 2011/08/02
APPR: JWIENER 2011/08/08

THIRD ANGLE PROJECTION

DRAWING: C-SIZE
SERIES: 73300

molex

SMPM, PLUG VERTICAL PCB
FULL DETENT, SMT 50 OHM EWR-13431, SMPM-PCB

PRODUCT SALES DRAWING

DOCUMENT NUMBER	DOC TYPE	DOC PART	REVISION
SD-73300-009	PSD	001	B5

MATERIAL NUMBER	CUSTOMER	SHEET NUMBER
SEE TABLE		5 OF 5

FORMAT: Engelega-TC-tb-prod-C
REVISION: B
DATE: 2023/10/23