ENG No:			AE-3190-NA
DIM "D"			(11.43) .450
DIM "C"			(19.05) .750
CCT SIZE	DIM "A"	DIM "B"	PART No
3	(7.92) .312	(11.89) .468	26-19-2031
4	(11.89) .468	(15.85) .624	26-19-2041
5	(15.85) .624	(19.81) .780	26-19-2051
6	(19.81) .780	(23.77) .936	26-19-2061
8	(27.74) 1.092	(31.70) 1.248	26-19-2081
9	(31.70) 1.248	(35.66) 1.404	26-19-2091
10	(35.66) 1.404	(39.62) 1.560	26-19-2101
11	(39.62) 1.560	(43.59) 1.716	26-19-2111
12	(43.59) 1.716	(47.55) 1.872	26-19-2121
13	(47.55) 1.872	(51.51) 2.028	26-19-2131
15	(55.47) 2.184	(59.44) 2.340	26-19-2151
16	(59.44) 2.340	(63.40) 2.496	26-19-2161
17	(63.40) 2.496	(67.36) 2.652	26-19-2171
18	(67.36) 2.652	(71.32) 2.808	26-19-2181
19	(71.32) 2.808	(75.29) 2.964	26-19-2191
20	(75.29) 2.964	(79.25) 3.120	26-19-2201

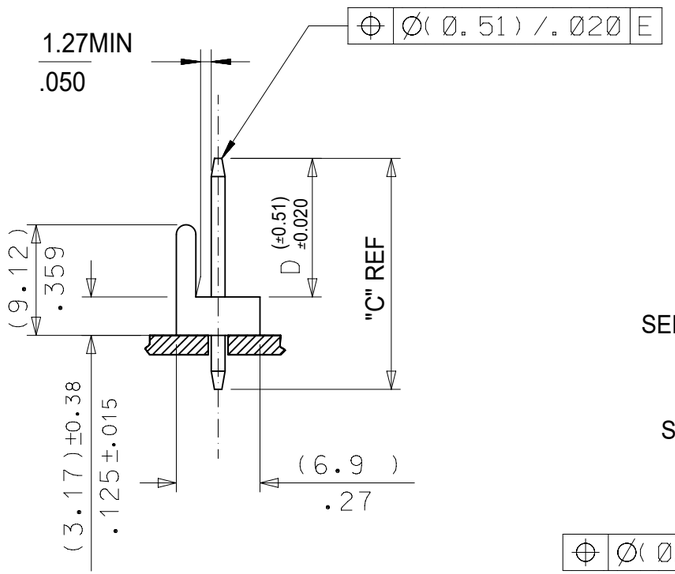

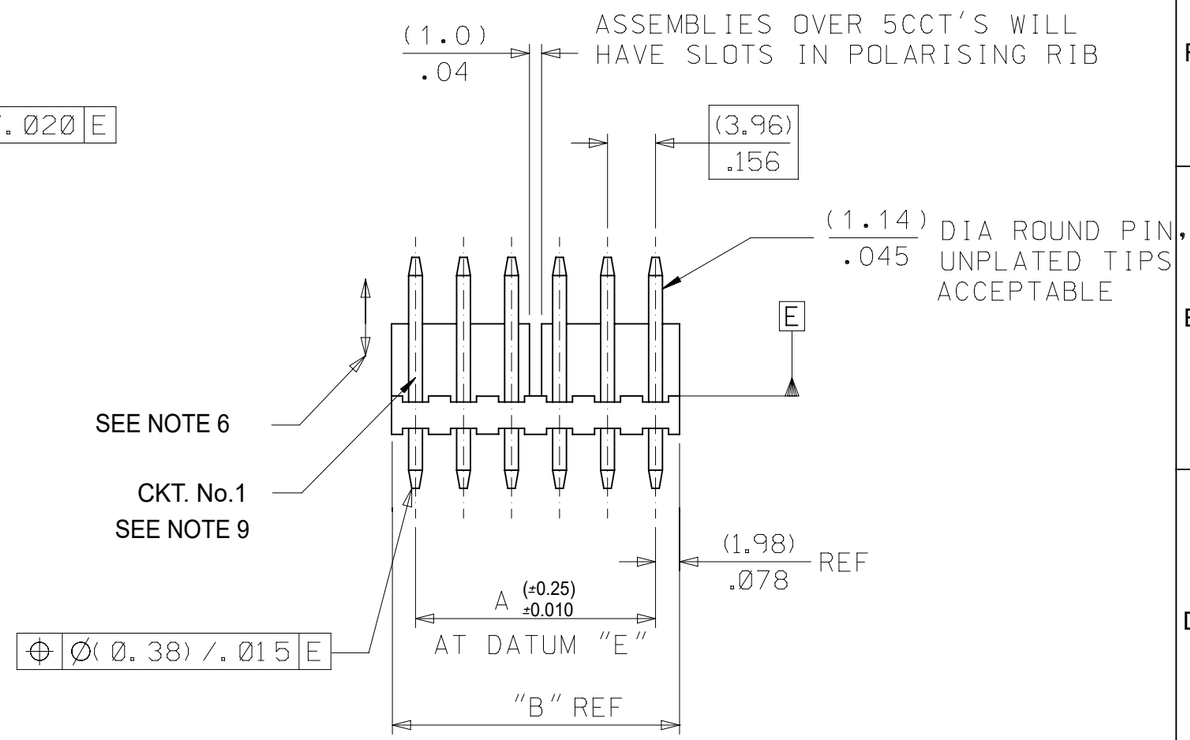

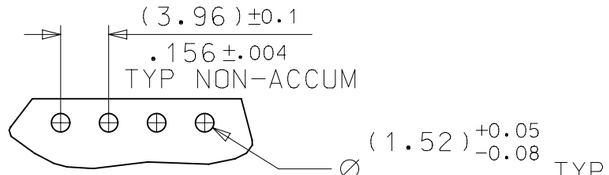

RECOMMENDED PCB HOLE DIMENSIONS

NOTES:
1. MATERIAL: HOUSING: NYLON, UL94V-2, COLOR: NATURAL
   PINS: BRASS
2. FINISH: (0.00254)/.000100 MIN. MATTE TIN OVER
   (0.00127)/.000050 MIN. NICKEL
   UNPLATED TIPS ACCEPTABLE
3. PRODUCT SPECIFICATION: PS-99020-0087
4. PACKAGING SPECIFICATION: PER PK-3190-001
5. THIS PART CONFORMS TO CLASS B REQUIREMENTS OF COSMETIC SPECIFICATION PS-45499-002.
6. PIN PUSHOUT FORCE 3 LBS MIN.
7. PIN MUST CONFORM TO MOLEX SOLDERABILITY SPEC SMES-152 AFTER PLATING.
8. RECOMMENDED PCB BOARD 1.6MM
9. CIRCUIT 1 USED TO DEFINE VOID LOCATION. CIRCUIT 1 MAY OR MAY NOT ALIGN WITH CIRCUIT 1 OF THE MATING PART.

THIS DRAWING CONTAINS INFORMATION THAT IS PROPRIETARY TO MOLEX ELECTRONIC TECHNOLOGIES, LLC AND SHOULD NOT BE USED WITHOUT WRITTEN PERMISSION

FUNCTIONAL SYMBOLS: EA = 0; EC = 0; EP = 0

DIVISIONAL SYMBOLS

DIMENSION UNITS: MM/IN
SCALE: NTS

GENERAL TOLERANCES (UNLESS SPECIFIED)

	MM	INCH
4 PLACES	±	±
3 PLACES	±	± 0.01
2 PLACES	± 0.25	± 0.014
1 PLACE	± 0.35	±
0 PLACES	±	±
ANGULAR TOL	± 0.5 °	

DRAFT WHERE APPLICABLE MUST REMAIN WITHIN DIMENSIONS

CURRENT REV DESC: REMOVED OBSOLETED PART NUMBERS AS PER PCN#515767

EC NO: 806185
DRWN: VISHAH2 2024/11/27
CHK'D: GGA 2024/12/16
APPR: GGA 2024/12/16

INITIAL REVISION:
DRWN: T.MOHON 1998/10/02
APPR: MWILHITE 1998/10/02

THIRD ANGLE PROJECTION | DRAWING: B-SIZE | SERIES: 3190

molex

WAFER POL KK .156
FOR .045 ROUND PINS

PRODUCT CUSTOMER DRAWING

DOCUMENT NUMBER	DOC TYPE	DOC PART	REVISION
SDAE-3190-NXX	PSD	001	AD2

MATERIAL NUMBER	CUSTOMER	SHEET NUMBER
SEE CHART	GENERAL MARKET	1 OF 2

DOCUMENT STATUS	P1	RELEASE DATE	2024/12/16 13:41:09

FORMAT: Eng-lega-mpd-prod-B
REVISION: E1
DATE: 2021/05/01

ENG NO:	AE-3190-NA-*
DIM "D"	(11.43) .450
DIM "C"	(19.05) .750

NO. OF CKTS	VOID LOCATION	PART NO.	ENG NO.	DIM. "A"	DIM. "B"
3	3	38-00-7587	AE-3190-3A-51	(7.92 ±0.25) .312 ±.010	(11.89) .486
4	2	-7260	-4A-51	(11.89) .469	(15.85) .624
4	3	-7261	-4A-52	(11.89) .469	(15.85) .624
5	2	-7588	-5A-54	(15.85) .624	(19.81) .780
5	3	-1589	-5A-03	(15.85) .624	(19.81) .780
5	4	-7604	-5A-04	(15.85) .624	(19.81) .780
5	2&4	-1200	-5A-51	(15.85) .624	(19.81) .780
5	1,3	-7262	-5A-52	(15.85) .624	(19.81) .780
5	3,5	-1588	-5A-53	(15.85) .624	(19.81) .780
6	3	-7642	-6A-54	(19.81) .780	(23.77) .936
6	4	-7263	-6A-51	(19.81) .780	(23.77) .936
6	5	-7641	-6A-53	(19.81) .780	(23.77) .936
6	3,6	-7589	-6A-52	(19.81) .780	(23.77) .936
7	6	-7605	-7A-06	(23.77) .936	(27.74) 1.092
8	4	-7590	-8A-51	(27.74) 1.092	(31.70) 1.248
9	4,7	-7638	-9A-52	(31.70) 1.248	(35.66) 1.404
10	3,4	-7639	-10A-51	(35.66) 1.404	(39.62) 1.560
11	6	-7591	-11A-55	(39.62) 1.560	(43.59) 1.716
11	2,4,8	-7264	-11A-52	(39.62) 1.560	(43.59) 1.716
11	3,4,8	-1587	-11A-53	(39.62) 1.560	(43.59) 1.716
11	4,8,9	-1586	-11A-54	(39.62) 1.560	(43.59) 1.716
13	3	-7669	-13A-3	(47.55) 1.872	(51.51) 2.028
13	4,8,11	-7640	-13A-51	(47.55) 1.872	(51.51) 2.028
15	3,9	-8241	-15A-52	(55.47) 2.184	(59.44) 2.340
15	9,13	38-00-8242	AE-3190-15A-53	(55.47±0.25) 2.184±.010	(59.44) 2.340

OBSOLETE PART #'S

0

0

0

SEE CHART