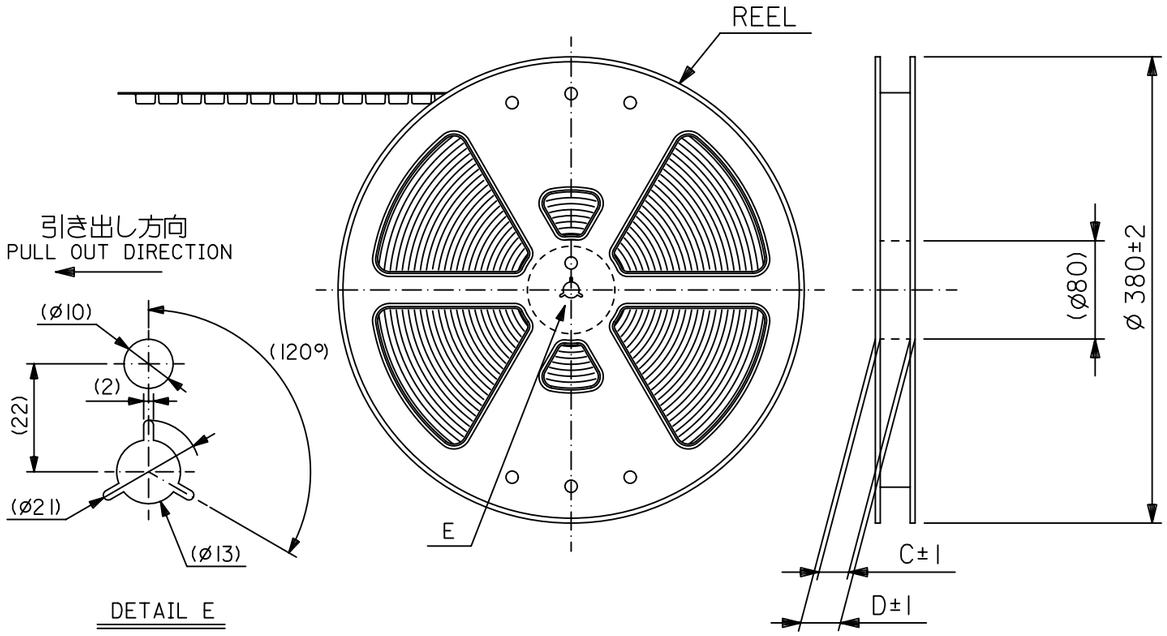

DETAIL E



NOTE

1.梱包数量：1000個/リール
NUMBER OF CONNECTORS : 1000 PCS/REEL

2.リードテープ長さ　LEAD TAPE LENGTH

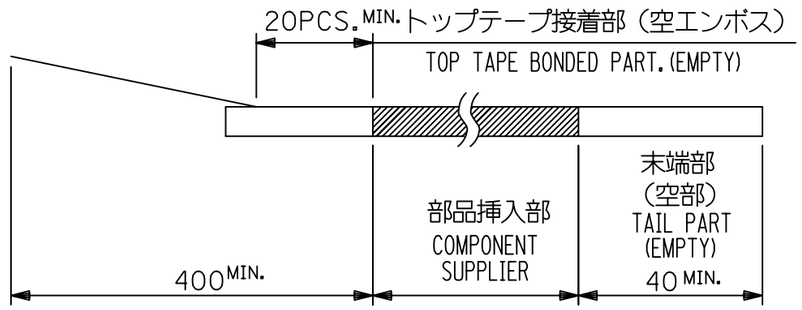

3.52610-**15のアクチュエータはハウジング内に押し下げた状態とする。
詳細寸法については図面 526101000 PSD 000 を参照下さい。
ACTUATOR OF PART NO. 52610-**15 SHOULD BE LOCKED.
RE DETAILD DIMENSIONS, SEE 526101000 PSD 000.

4.材料　MATERIAL
キャリアテープ：ポリプロピレン
トップテープ：PET, PE, PEF
リール：ポリスチレン ＜リサイクル材を含む＞
CARRIER TAPE : POLYPROPYLENE
TOP TAPE : PET, PE, PEF
REEL : POLYSTYRENE (PS) ＜RECYCLE MATERIAL CONTAINED＞

5.本製品は52610シリーズの接点金めっき品である。
THIS PRODUCT IS Au-CONTACT OF 52610 SERIES.

6.本製品は乾燥剤入り、ハイバリア梱包仕様である。
THIS PRODUCT ISHIGH BARRIER PACKAGE WITH DESICCANT.

MODEL NO. 52610-**72

THIS DRAWING CONTAINS INFORMATION THAT IS PROPRIETARY TO MOLEX ELECTRONIC TECHNOLOGIES, LLC AND SHOULD NOT BE USED WITHOUT WRITTEN PERMISSION

RELEASED
EC NO: 106044 2016/10/12
DRWN: YMIZUNO02 2016/12/28
CHK'D: YKOBAYASHI02 2016/12/28
APPR: TKUSUHARA01 2016/12/28

GENERAL TOLERANCES (UNLESS SPECIFIED)	
ANGULAR TOL ± 3.0 °	
4 PLACES	± 0.2
3 PLACES	± 0.2
2 PLACES	± 0.2
1 PLACE	± 0.2
0 PLACES	± 0.2

DRAFT WHERE APPLICABLE MUST REMAIN WITHIN DIMENSIONS

DIMENSION UNITS	SCALE
MM	---
DRWN BY	DATE
YMIZUNO02	2016/10/12
CHK'D BY	DATE
YKOBAYASHI02	2016/12/28
APPR BY	DATE
TKUSUHARA01	2016/12/28
DRAWING SIZE	THIRD ANGLE PROJECTION
A3	

REV: A

molex®

1.0 FPC CONN ZIF ASSY SMT ST EMBSTP PKG

PRODUCT CUSTOMER DRAWING

SERIES	MATERIAL NUMBER	CUSTOMER
52610	SEE CHART	GENERAL

DOCUMENT NUMBER	DOC TYPE	DOC PART	SHEET NUMBER
526100000	PSD	000	1 OF 5

RELEASE STATUS		RELEASE DATE	

FORMAT: tb-prod-A3
REVISION: G
DATE: 2015/12/14

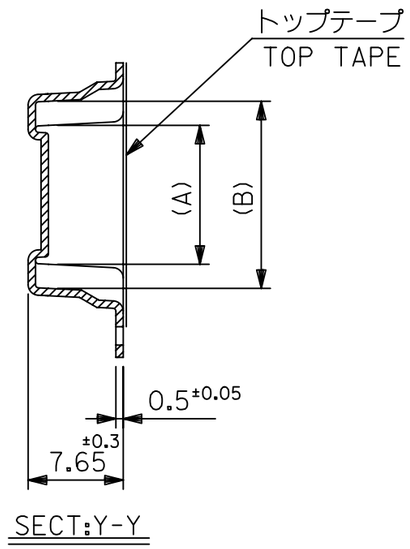

SECT:Y-Y

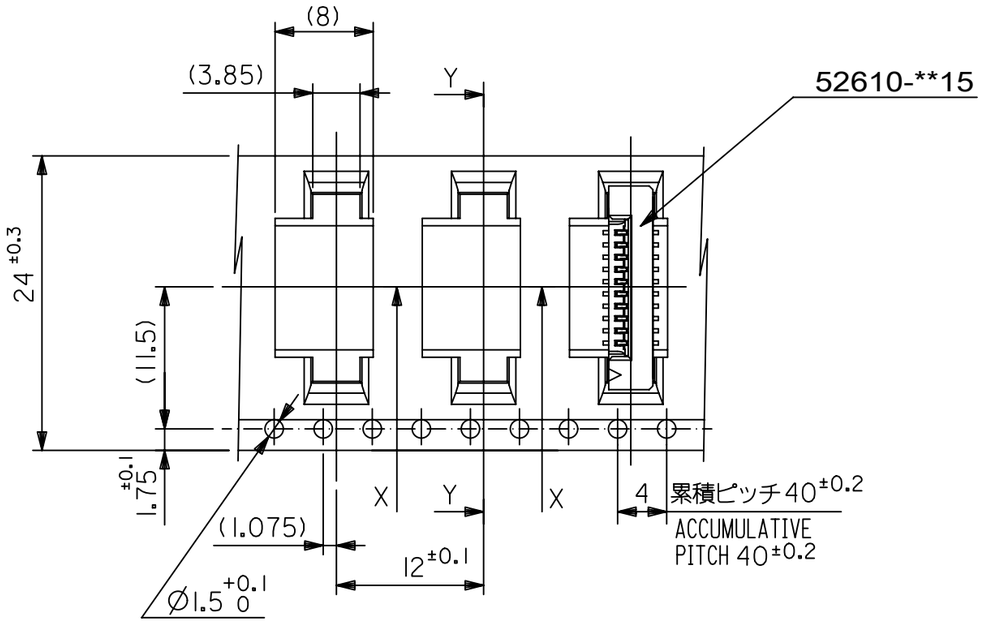

引き出し方向
PULL OUT DIRECTION

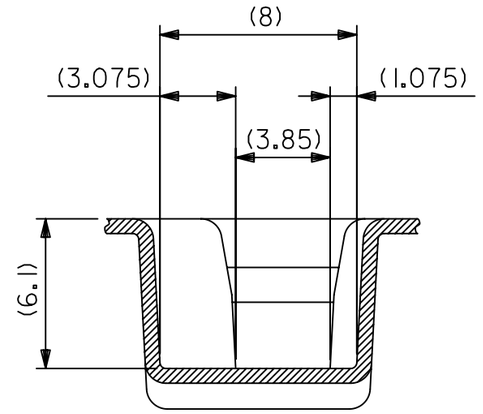

SECT:X-X
(SCALE 4:1)

24	29.4	25.4	15.25	11.32	52610-1072	10
			14.25	10.32	52610-0972	9
			13.25	9.32	52610-0872	8
			12.25	8.32	52610-0772	7
			11.25	7.32	52610-0672	6
			10.25	6.32	52610-0572	5
キャリアテープ幅 CARRIER TAPE WIDTH	D	C	(B)	(A)	MATERIAL NO.	極数 CKT

THIS DRAWING CONTAINS INFORMATION THAT IS PROPRIETARY TO MOLEX ELECTRONIC TECHNOLOGIES, LLC AND SHOULD NOT BE USED WITHOUT WRITTEN PERMISSION

RELEASED
EC NO: 106044 2016/10/12
DRWN: YMIZUNO02 2016/12/28
CHK'D: YKOBAYASHI02 2016/12/28
APPR: TKUSUHARA01

REV
A

GENERAL TOLERANCES (UNLESS SPECIFIED)

ANGULAR TOL ± 3.0 °

4 PLACES	±	0.2
3 PLACES	±	0.2
2 PLACES	±	0.2
1 PLACE	±	0.2
0 PLACES	±	0.2

DRAFT WHERE APPLICABLE MUST REMAIN WITHIN DIMENSIONS

DIMENSION UNITS	SCALE
MM	---
DRWN BY	DATE
YMIZUNO02	2016/10/12
CHK'D BY	DATE
YKOBAYASHI02	2016/12/28
APPR BY	DATE
TKUSUHARA01	2016/12/28
DRAWING SIZE	THIRD ANGLE PROJECTION
A3	

molex®

1.0 FPC CONN ZIF ASSY SMT ST EMBSTP PKG

PRODUCT CUSTOMER DRAWING

SERIES	MATERIAL NUMBER	CUSTOMER
52610	SEE CHART	GENERAL

DOCUMENT NUMBER	DOC TYPE	DOC PART	SHEET NUMBER
526100000	PSD	000	2 OF 5

RELEASE STATUS		RELEASE DATE	

FORMAT: master-tb-prod-A3
REVISION: G
DATE: 2015/12/14

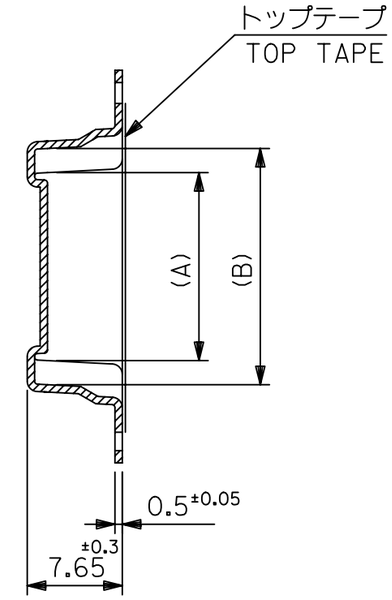

SECT:Y-Y

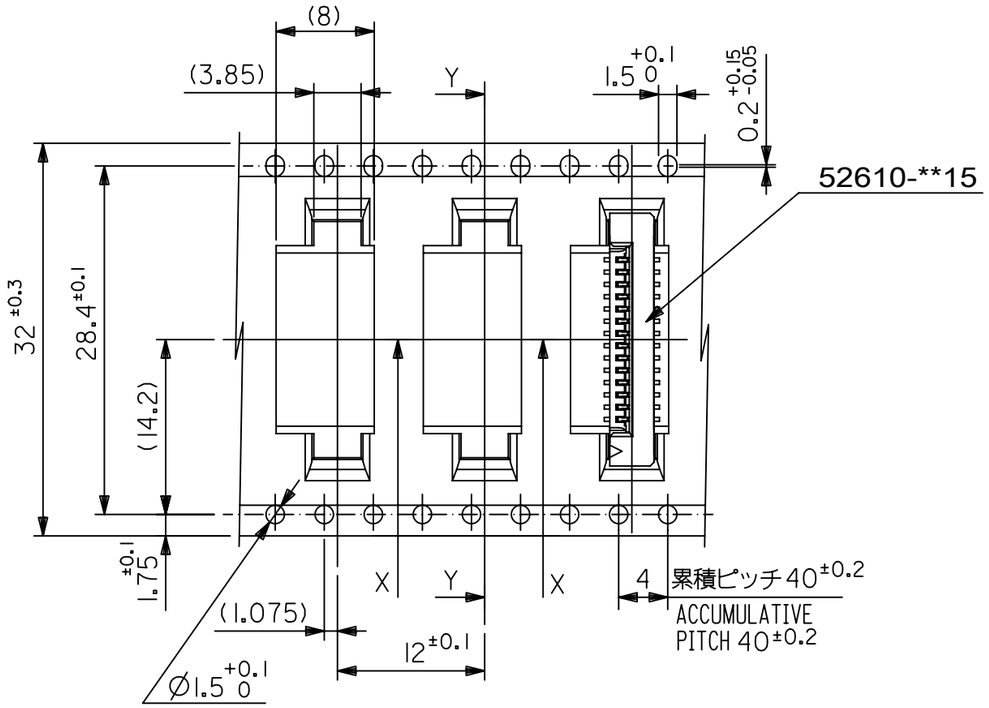

引き出し方向
PULL OUT DIRECTION

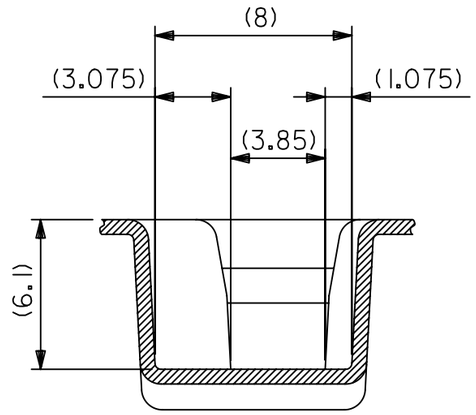

SECT:X-X
(SCALE 4:1)

32	37.4	33.4	20.25	16.32	52610-1572	15
			19.25	15.32	52610-1472	14
			18.25	14.32	52610-1372	13
			17.25	13.32	52610-1272	12
			16.25	12.32	52610-1172	11
キャリアテープ幅 CARRIER TAPE WIDTH	D	C	(B)	(A)	MATERIAL NO.	極数 CKT

THIS DRAWING CONTAINS INFORMATION THAT IS PROPRIETARY TO MOLEX ELECTRONIC TECHNOLOGIES, LLC AND SHOULD NOT BE USED WITHOUT WRITTEN PERMISSION

RELEASED
EC NO: 106044 2016/10/12
DRWN: YMIZUNO02 2016/12/28
CHK'D: YKOBAYASHI02 2016/12/28
APPR: TKUSUHARA01

GENERAL TOLERANCES (UNLESS SPECIFIED)	
ANGULAR TOL ± 3.0 °	
4 PLACES	± 0.2
3 PLACES	± 0.2
2 PLACES	± 0.2
1 PLACE	± 0.2
0 PLACES	± 0.2

DRAFT WHERE APPLICABLE MUST REMAIN WITHIN DIMENSIONS

DIMENSION UNITS	SCALE
MM	---
DRWN BY	DATE
YMIZUNO02	2016/10/12
CHK'D BY	DATE
YKOBAYASHI02	2016/12/28
APPR BY	DATE
TKUSUHARA01	2016/12/28
DRAWING SIZE	THIRD ANGLE PROJECTION
A3	

molex®

1.0 FPC CONN ZIF ASSY SMT ST EMBSTP PKG

PRODUCT CUSTOMER DRAWING

SERIES	MATERIAL NUMBER	CUSTOMER
52610	SEE CHART	GENERAL

DOCUMENT NUMBER	DOC TYPE	DOC PART	SHEET NUMBER
526100000	PSD	000	3 OF 5

A REV

RELEASE STATUS		RELEASE DATE	

FORMAT: master-lb-prod-A3
REVISION: G
DATE: 2015/12/14

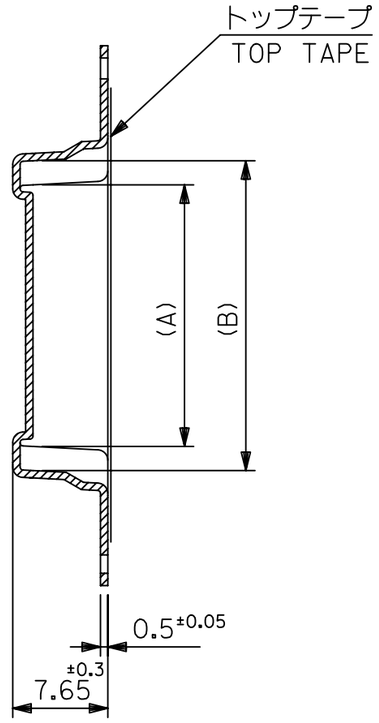

SECT:Y-Y

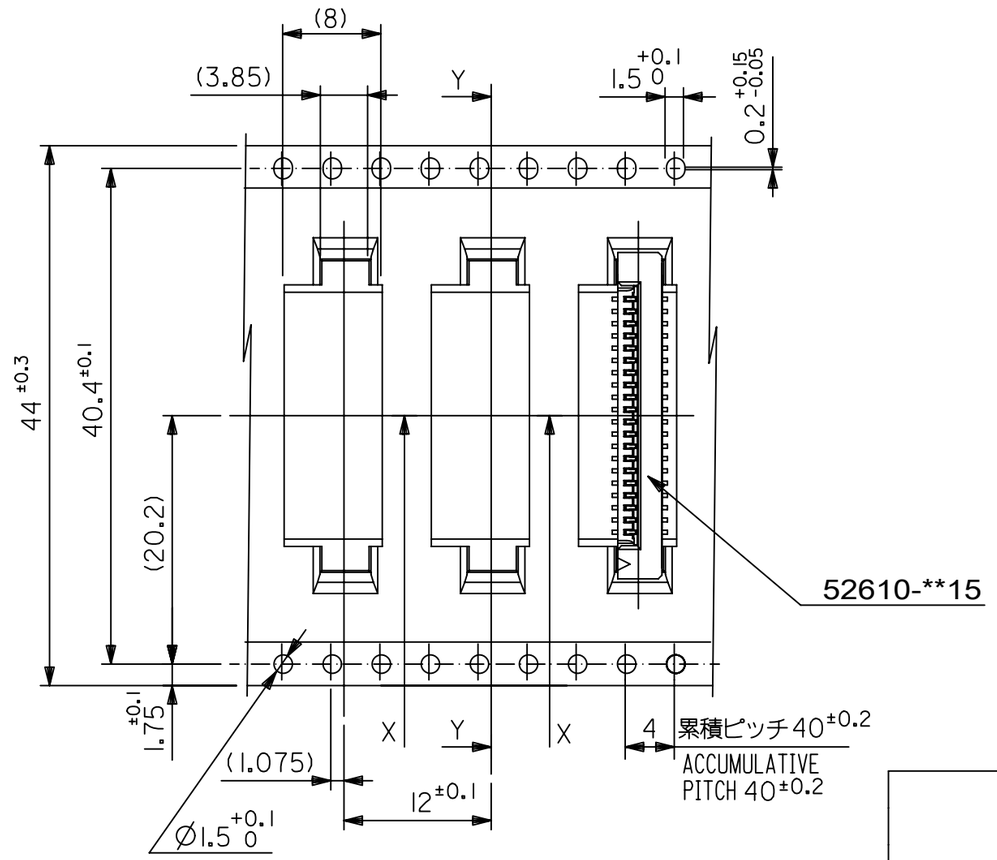

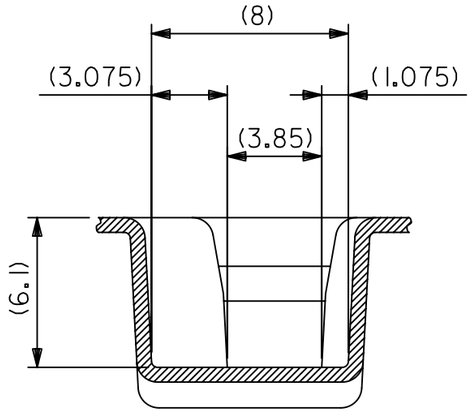

SECT:X-X
(SCALE 4:1)

キャリアテープ幅 CARRIER TAPE WIDTH	D	C	(B)	(A)	MATERIAL NO.	極数 CKT
44	49.4	45.4	31.25	27.32	52610-2672	26
			30.25	26.32	52610-2572	25
			29.25	25.32	52610-2472	24
			28.25	24.32	52610-2372	23
			27.25	23.32	52610-2272	22
			26.25	22.32	52610-2172	21
			25.25	21.32	52610-2072	20
			24.25	20.32	52610-1972	19
			23.25	19.32	52610-1872	18
			22.25	18.32	52610-1772	17
			21.25	17.32	52610-1672	16

THIS DRAWING CONTAINS INFORMATION THAT IS PROPRIETARY TO MOLEX ELECTRONIC TECHNOLOGIES, LLC AND SHOULD NOT BE USED WITHOUT WRITTEN PERMISSION

RELEASED
EC NO: 106044 2016/10/12
DRWN: YMIZUNO02 2016/12/28
CHK'D: YKOBAYASHI02 2016/12/28
APPR: TKUSUHARA01

REV: A

GENERAL TOLERANCES (UNLESS SPECIFIED)
ANGULAR TOL ± 3.0 °
4 PLACES ± 0.2
3 PLACES ± 0.2
2 PLACES ± 0.2
1 PLACE ± 0.2
0 PLACES ± 0.2
DRAFT WHERE APPLICABLE MUST REMAIN WITHIN DIMENSIONS

DIMENSION UNITS: MM
SCALE: ---
DRWN BY: YMIZUNO02 DATE: 2016/10/12
CHK'D BY: YKOBAYASHI02 DATE: 2016/12/28
APPR BY: TKUSUHARA01 DATE: 2016/12/28
DRAWING SIZE: A3
THIRD ANGLE PROJECTION

molex®

1.0 FPC CONN ZIF ASSY SMT ST EMBSTP PKG

PRODUCT CUSTOMER DRAWING

SERIES	MATERIAL NUMBER	CUSTOMER
52610	SEE CHART	GENERAL

DOCUMENT NUMBER	DOC TYPE	DOC PART	SHEET NUMBER
526100000	PSD	000	4 OF 5

RELEASE STATUS		RELEASE DATE	

FORMAT: master-lib-prod-A3
REVISION: G
DATE: 2015/12/14

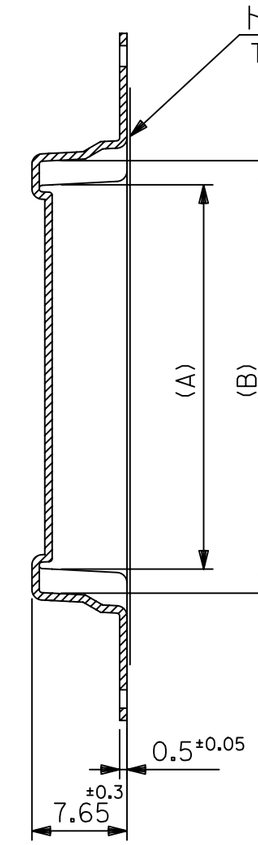

SECT:Y-Y

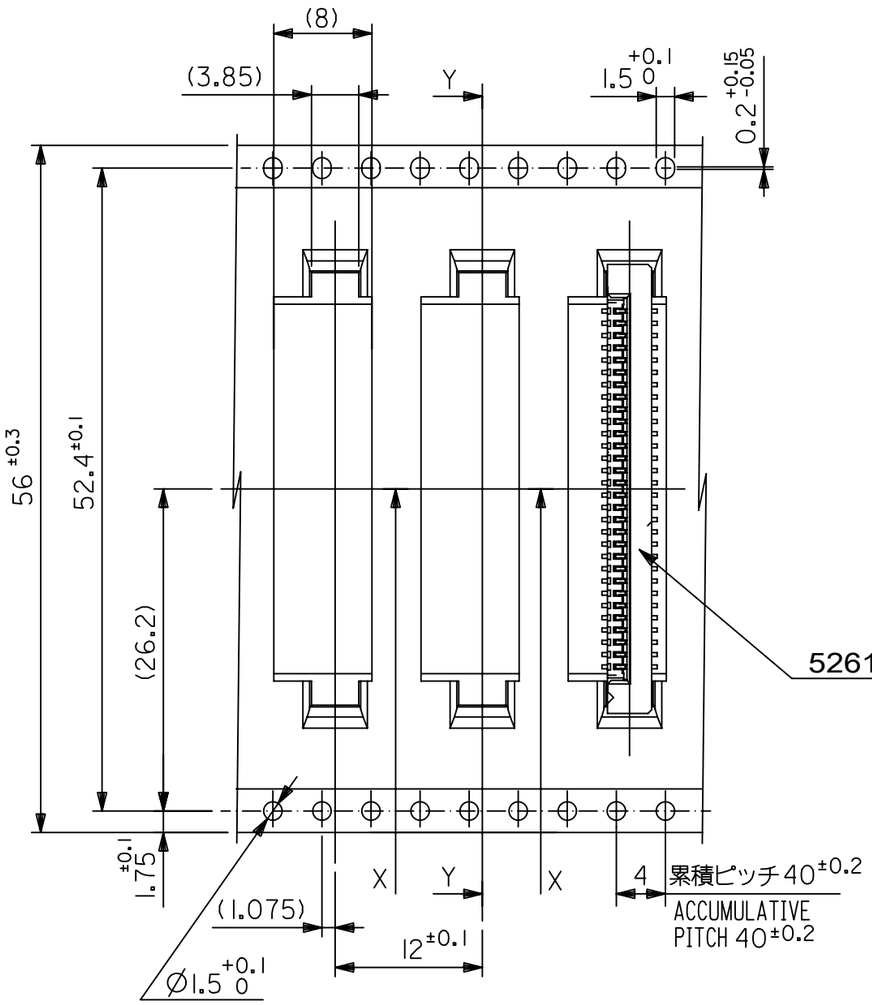

引き出し方向
PULL OUT DIRECTION

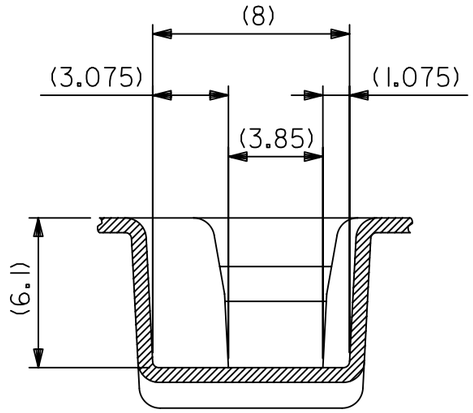

SECT:X-X
(SCALE 4:1)

56	61.4	57.4	35.25	31.32	52610-3072	30
			33.25	29.32	52610-2872	28
キャリアテープ幅 CARRIER TAPE WIDTH	D	C	(B)	(A)	MATERIAL NO.	極数 CKT

THIS DRAWING CONTAINS INFORMATION THAT IS PROPRIETARY TO MOLEX ELECTRONIC TECHNOLOGIES, LLC AND SHOULD NOT BE USED WITHOUT WRITTEN PERMISSION

RELEASED
EC NO: 106044 2016/10/12
DRWN: YMIZUNO02 2016/12/28
CHK'D: YKOBAYASHI02 2016/12/28
APPR: TKUSUHARA01 2016/12/28

GENERAL TOLERANCES (UNLESS SPECIFIED)

ANGULAR TOL ±	3.0	°
4 PLACES	±	0.2
3 PLACES	±	0.2
2 PLACES	±	0.2
1 PLACE	±	0.2
0 PLACES	±	0.2

DRAFT WHERE APPLICABLE MUST REMAIN WITHIN DIMENSIONS

REV: A

DIMENSION UNITS: MM
SCALE: ---
DRWN BY: YMIZUNO02 DATE: 2016/10/12
CHK'D BY: YKOBAYASHI02 DATE: 2016/12/28
APPR BY: TKUSUHARA01 DATE: 2016/12/28
DRAWING SIZE: A3
THIRD ANGLE PROJECTION

molex®

1.0 FPC CONN ZIF ASSY SMT ST EMBSTP PKG

PRODUCT CUSTOMER DRAWING

SERIES	MATERIAL NUMBER	CUSTOMER
52610	SEE CHART	GENERAL

DOCUMENT NUMBER	DOC TYPE	DOC PART	SHEET NUMBER
526100000	PSD	000	5 OF 5

RELEASE STATUS		RELEASE DATE	

FORMAT: master-lib-prod-A3
REVISION: G
DATE: 2015/12/14

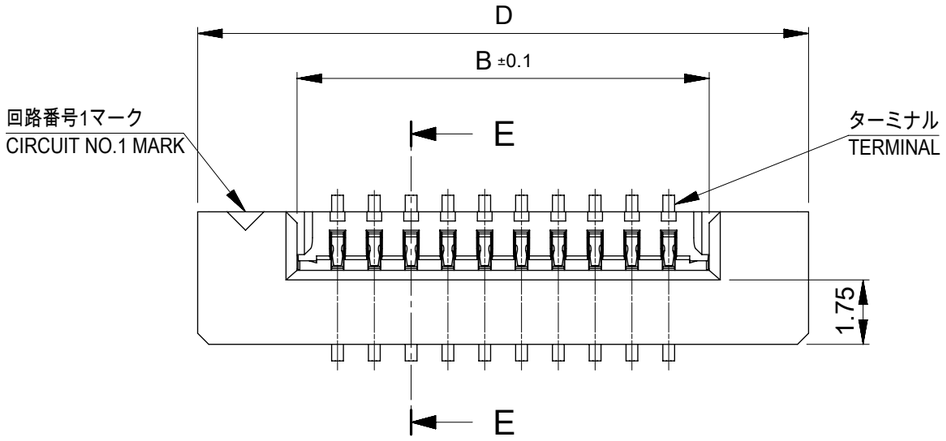

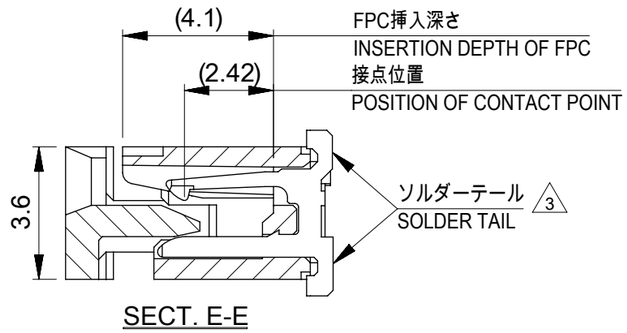

SECT. E-E

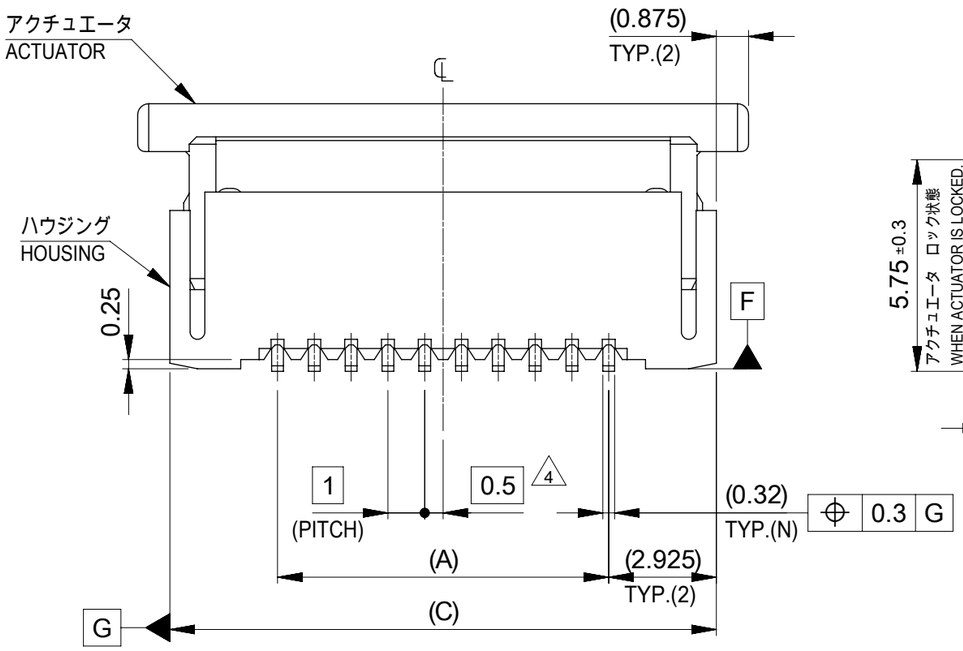

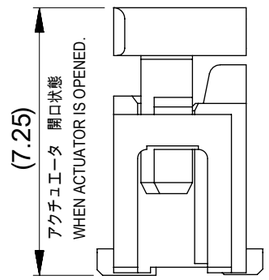

36.6	34.85	31.2	29	52610-3072	30
34.6	32.85	29.2	27	52610-2872	28
32.6	30.85	27.2	25	52610-2672	26
30.6	28.85	25.2	23	52610-2472	24
29.6	27.85	24.2	22	52610-2372	23
28.6	26.85	23.2	21	52610-2272	22
27.6	25.85	22.2	20	52610-2172	21
26.6	24.85	21.2	19	52610-2072	20
25.6	23.85	20.2	18	52610-1972	19
24.6	22.85	19.2	17	52610-1872	18
23.6	21.85	18.2	16	52610-1772	17
22.6	20.85	17.2	15	52610-1672	16
21.6	19.85	16.2	14	52610-1572	15
20.6	18.85	15.2	13	52610-1472	14
19.6	17.85	14.2	12	52610-1372	13
18.6	16.85	13.2	11	52610-1272	12
17.6	15.85	12.2	10	52610-1172	11
16.6	14.85	11.2	9	52610-1072	10
15.6	13.85	10.2	8	52610-0972	9
14.6	12.85	9.2	7	52610-0872	8
13.6	11.85	8.2	6	52610-0772	7
12.6	10.85	7.2	5	52610-0672	6
11.6	9.85	6.2	4	52610-0572	5
D	(C)	B	(A)	MATERIAL NO.	極数 CKT

GENERAL TOLERANCES (UNLESS SPECIFIED)	
10 UNDER	±0.2
10 OVER 30 UNDER	±0.25
30 OVER	±0.3

GENERAL TOLERANCES (UNLESS SPECIFIED)	
ANGULAR TOL	± 3.0 °
4 PLACES	± 0.03
3 PLACES	± 0.03
2 PLACES	± 0.05
1 PLACE	± 0.1
0 PLACES	± 0.2

DRAFT WHERE APPLICABLE MUST REMAIN WITHIN DIMENSIONS

THIS DRAWING CONTAINS INFORMATION THAT IS PROPRIETARY TO MOLEX ELECTRONIC TECHNOLOGIES, LLC AND SHOULD NOT BE USED WITHOUT WRITTEN PERMISSION

DIMENSION UNITS: mm | SCALE: ---

CURRENT REV DESC:

EC NO: 745355
DRWN: RAJMOK 2023/04/06
CHK'D: HSHIMOYAMA 2023/04/07
APPR: HSHIMOYAMA 2023/04/07

INITIAL REVISION:
DRWN: YMIZUNO02 2016/10/12
APPR: TKUSUHARA01 2016/12/28

THIRD ANGLE PROJECTION | DRAWING: A3-SIZE | SERIES: 52610

molex

1.0 FPC CONN ZIF S/T HOUSING ASSY

PRODUCT CUSTOMER DRAWING

DOCUMENT NUMBER	DOC TYPE	DOC PART	REVISION
526101000	PSD	000	C

MATERIAL NUMBER	CUSTOMER	SHEET NUMBER
SEE TABLE	GENERAL	1 OF 2

DOCUMENT STATUS	P1	RELEASE DATE	2023/04/07 10:47:37

FORMAT: master-lb-prod-A3
REVISION: J1
DATE: 2021/05/01

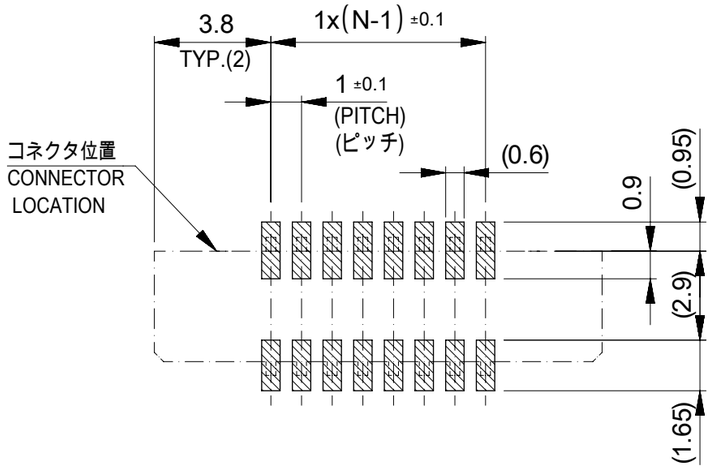

参考基盤レイアウト
RECOMMENDED P.C.BOARD
PATTERN LAYOUT (REFERENCE)

マスク厚　　: 120μm
マスク開口率 : 100%
SCREEN THICKNESS : 120 MICROMETER
SCREEN OPEN RATIO : 100%

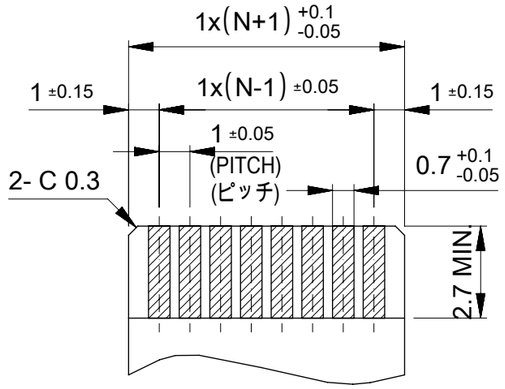

適合FPC/FFC推奨寸法
APPLICABLE FPC/FFC
RECOMMENDED DIMENSION
(仕上がり厚さ : 0.3±0.05)
(THICKNESS : 0.3±0.05)

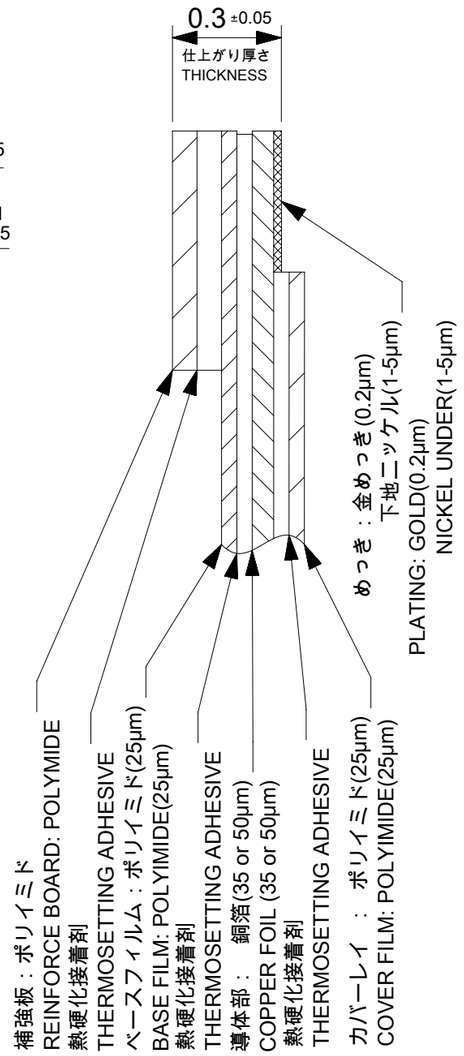

FPC構成推奨仕様
RECOMMENDED STRUCTURE OF FPC

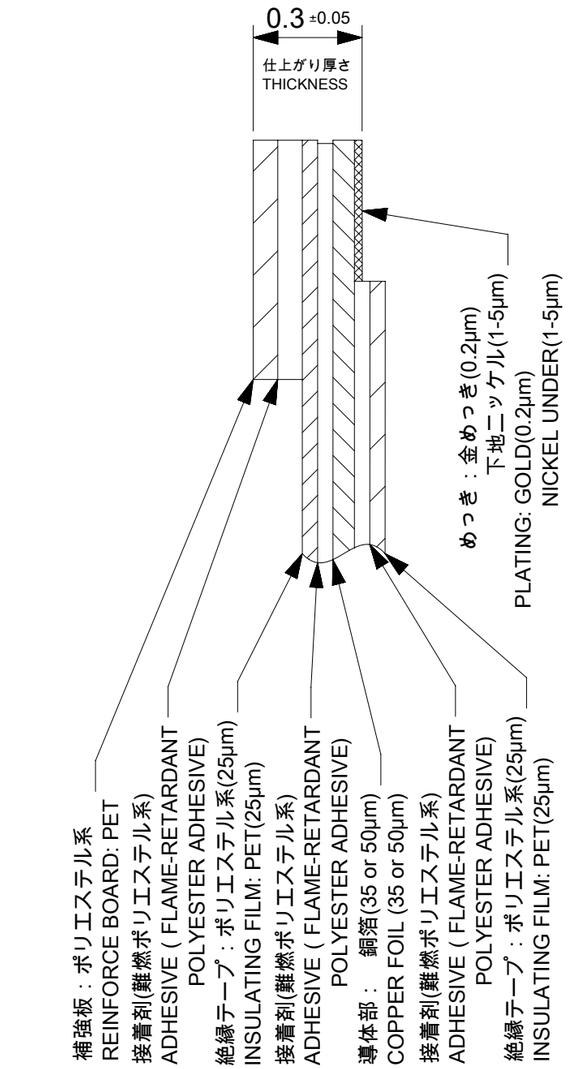

FFC構成推奨仕様
RECOMMENDED STRUCTURE OF FFC

注記(NOTES):
1.材質　MATERIAL
　ハウジング : 46ナイロン、ガラス充填、UL94V-0、ナチュラル(白色)
　アクチュエータ : PPS、ナチュラル(茶色)、ガラス充填、UL94V-0
　ターミナル : リン青銅(t=0.32)
　HOUSING : 46NYLON, GLASS FILLED, UL94V-0, NATURAL(WHITE)
　ACTUAOR : PPS, NATURAL(BROWN), GLASS FILLED, UL94V-0
　TERMINAL : PHOSPHOR BRONZE(t=0.32)
2.めっき仕様　PLATING
　ターミナル TERMINAL
　　接点部：金めっき(0.1μm以上)
　　テール部：錫めっき(1.0μm以上)
　　下地：ニッケルめっき(1.0μm以上)
　　CONTACT : GOLD PLATING (0.1 MICROMETER MINIMUM)
　　TAIL : MATTE TIN (1.0 MICROMETER MINIMUM)
　　UNDER PLATE : NICKEL PLATING (1.0 MICROMETER MINIMUM)
△3 ソルダーテール半田付け面のズレ量は、基準面 F に対し
　上方向0.05MAX.、下方向0.15MAX.とする。
　MISALIGNMENT OF SOLDER TAILS FROM F UPPER DIREVTION : 0.05 MAX.
　LOWER DIRECTION :0.15 MAX.
△4 偶数極に適用。
　APPLY FOR EVEN CIRCUIT.
5.エンボステープ梱包時は、アクチュエータがロックした状態とする。
　IN THE PACKAGE, ACTUATOR SHOULD BE LOCKED.
6.本製品は52610シリーズの接点金めっき品である。
　THIS PRODUCT IS Au-CONTACT OF 52610 SERIES.

FPC/FFCについて :
　抜き方向は、導体側から補強板側を推奨致します。
　尚、接着剤の接点部への付着は導通不良の原因になりますので、
　染み出しが無い様お願い致します。
ABOUT FPC/FFC:
　RECOMMENDED PUNCHER DIRECTION:
　FROM CONDUCTOR SIDE TO STIFFNER SIDE
　PLEASE PUT APPROPRIATE AMOUNT OF ADHESIVE ON ADHEREND
　BECAUSE THERE IS A POSSIBILITY THAT THE EXTRA ADHESIVE
　CAUSES THE　DEFECT IN ELECTRICAL CONTINUITY.

GENERAL TOLERANCES (UNLESS SPECIFIED)	
10 UNDER	±0.2
10 OVER　30 UNDER	±0.25
30 OVER	±0.3

4 PLACES	± 0.03
3 PLACES	± 0.03
2 PLACES	± 0.05
1 PLACE	± 0.1
0 PLACES	± 0.2

DRAFT WHERE APPLICABLE MUST REMAIN WITHIN DIMENSIONS

THIS DRAWING CONTAINS INFORMATION THAT IS PROPRIETARY TO MOLEX ELECTRONIC TECHNOLOGIES, LLC AND SHOULD NOT BE USED WITHOUT WRITTEN PERMISSION

DIMENSION UNITS	SCALE
mm	---

GENERAL TOLERANCES (UNLESS SPECIFIED)
ANGULAR TOL ± 3.0 °

CURRENT REV DESC:

EC NO: 745355
DRWN: RAJMOK 2023/04/06
CHK'D: HSHIMOYAMA 2023/04/07
APPR: HSHIMOYAMA 2023/04/07

INITIAL REVISION:
DRWN: YMIZUNO02 2016/10/12
APPR: TKUSUHARA01 2016/12/28

THIRD ANGLE PROJECTION | DRAWING: A3-SIZE | SERIES: 52610

molex

1.0 FPC CONN ZIF S/T HOUSING ASSY

PRODUCT CUSTOMER DRAWING

DOCUMENT NUMBER	DOC TYPE	DOC PART	REVISION
526101000	PSD	000	C

MATERIAL NUMBER	CUSTOMER	SHEET NUMBER
SEE SHEET-1	GENERAL	2 OF 2

DOCUMENT STATUS	P1	RELEASE DATE	2023/04/07　10:47:37

FORMAT: master-lb-prod-A3
REVISION: J1
DATE: 2021/05/01