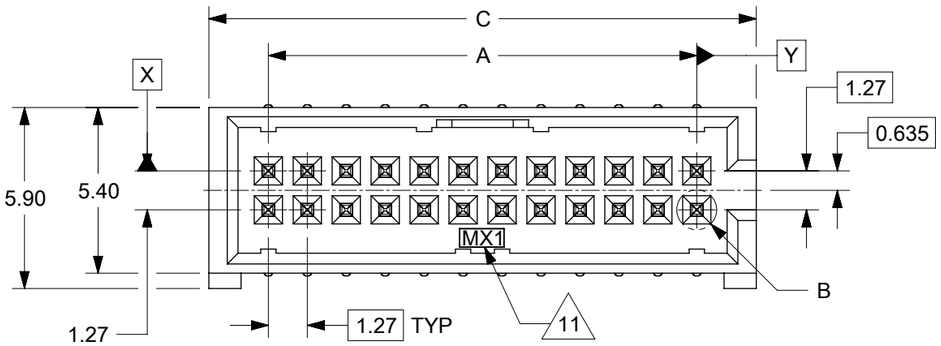

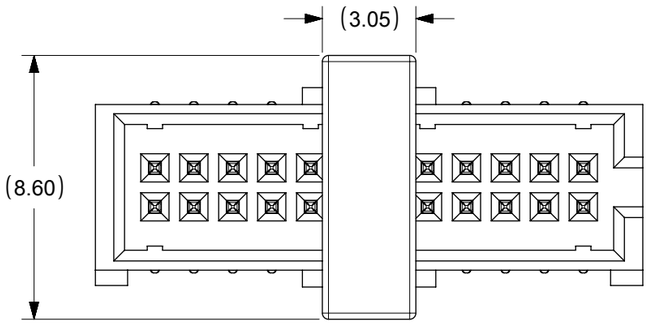

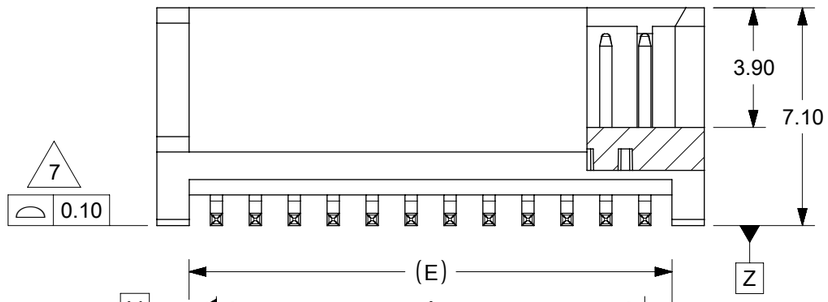

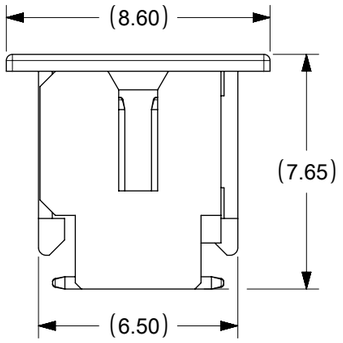

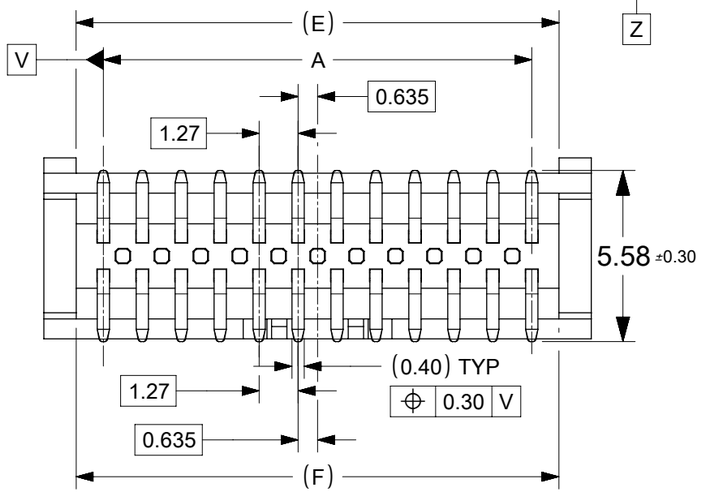

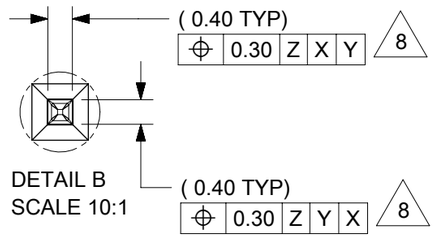

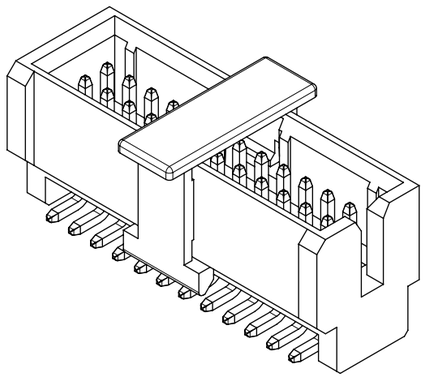

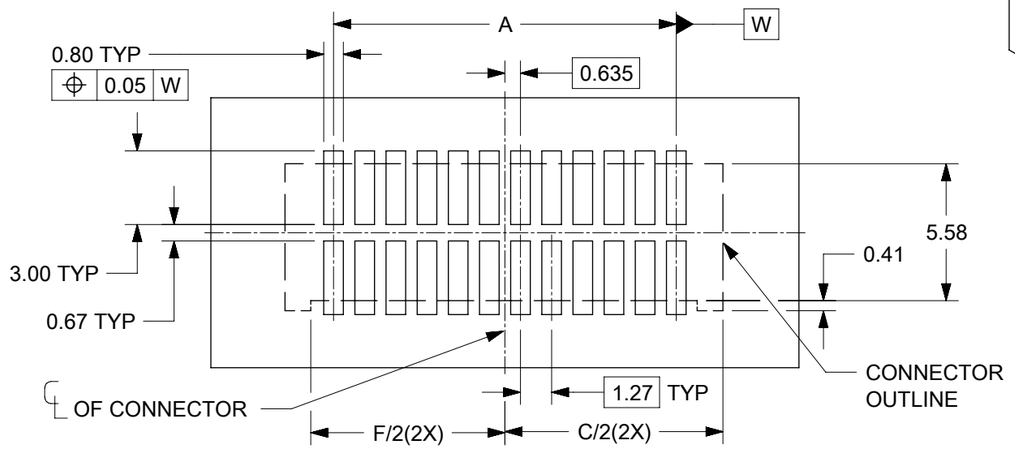

RECOMMENDED PCB LAYOUT
TOLERANCE ±0.05

CKT SIZE	DIMENSION					
	A	B	C	D	E	F
4	1.27	3.25	5.15	-	3.05	3.04
6	2.54	4.52	6.42	4.85	4.32	4.31
8	3.81	5.79	7.69	4.85	5.59	5.58
10	5.08	7.06	8.96	4.85	6.86	6.85
12	6.35	8.33	10.23	4.85	8.13	8.12
14	7.62	9.60	11.50	4.85	9.40	9.39
16	8.89	10.87	12.77	4.85	10.67	10.66
18	10.16	12.14	14.04	4.85	11.94	11.93
20	11.43	13.41	15.31	4.85	13.21	13.20
22	12.70	14.68	16.58	4.85	14.48	14.47
24	13.97	15.95	17.85	4.85	15.75	15.74

NOTES:
1. FOR ILLUSTRATION PURPOSES, 24 CIRCUIT SIZE WAFER IS SHOWN.
2. MATERIAL :
   HOUSING : LIQUID CRYSTALLINE POLYMER (LCP), GLASS-FILLED UL94V-0, BLACK
   BANDOLIER PIN :COPPER ALLOY, 0.40MM SQ. PIN
   PICK AND PLACE CAP: POLYAMIDE (PA), GLASS-FILLED, UL94V-0, BLACK
3. FINISHES: SEE SHEET 2
4. PRODUCT SPECIFICATION: 2009890001 (PS)
5. PACKAGING SPECIFICATION: 2009890001_PK(TUBE)
   2009890002_PK(T&R)
6. MATES WITH: 78120 SERIES
7. COPLANARITY IS TO BE MEASURED BY RESTING THE SOLDER TAIL ON A GAUGE SURFACE
8. POSITIONING TO BE CONTROLLED BASED ON PIN TIP
9. BEND DEPRESSION ON SMT TAIL IS ACCEPTACLE SO LONG AS IT DOES NOT AFFECT THE OVERALL COPLANARITY OF THE TAIL.
10. PARTS CONFORMS TO CLASS "B" REQUIREMENT OF COSMETIC SPECIFICATION PS-45499-002
11. MOLEX LOGO AND CAVITY LOCATED AS SHOWN.
12. NON-FUNCTIONAL CORING IS SUBJECTED TO CHANGES WITHOUT NOTICE.
13. THE ABOVE 24 CKT SHOWN IS FOR ILLUSTRATION ONLY.

THIS DRAWING CONTAINS INFORMATION THAT IS PROPRIETARY TO MOLEX ELECTRONIC TECHNOLOGIES, LLC AND SHOULD NOT BE USED WITHOUT WRITTEN PERMISSION

DIMENSION UNITS	mm
SCALE	NTS
GENERAL TOLERANCES (UNLESS SPECIFIED)	
ANGULAR TOL	± 3.0 °
4 PLACES	±
3 PLACES	±
2 PLACES	± 0.2
1 PLACE	±
0 PLACES	±
DRAFT WHERE APPLICABLE MUST REMAIN WITHIN DIMENSIONS	

CURRENT REV DESC: REMOVED OBSOLETED PART NUMBERS AS PER PCN #515183

EC NO: 826030
DRWN: PRANAA 2025/06/27
CHK'D: GGA 2025/07/01
APPR: GGA 2025/07/01

INITIAL REVISION:
DRWN: SCHEONG 2016/01/15
APPR: KHLIM 2016/11/24

molex

1.27MM PITCH SLIM-GRID
VERTICAL SMT SHROUDED HEADER

PRODUCT CUSTOMER DRAWING

DOCUMENT NUMBER	DOC TYPE	DOC PART	REVISION
2009890024	PSD	000	A6

THIRD ANGLE PROJECTION	DRAWING	SERIES	MATERIAL NUMBER	CUSTOMER	SHEET NUMBER
	A3-SIZE	200989	SEE TABLE	GENERAL MARKET	1 OF 3

DOCUMENT STATUS	P1	RELEASE DATE	2025/07/01 07:04:05

FORMAT: master-tb-prod-A3
REVISION: J1
DATE: 2021/05/01

CKT SIZE	ASSEMBLY WITHOUT CAP IN TUBE P/N	ASSEMBLY WITH CAP IN TUBE P/N	ASSEMBLY WITH CAP IN T&R P/N	TAPE & REEL TOOLED (A5)
4	200989-0004		200989-2004	N
	200989-0104	200989-1104	200989-2104	
	200989-0204	200989-1204	200989-2204	
6	200989-0006	200989-1006	200989-2006	Y
	200989-0106	200989-1106	200989-2106	
	200989-0206	---	200989-2206	
8	200989-0008	---	---	N
	200989-0108	---	200989-2108	
	200989-0208	---	200989-2208	
10	200989-0010	---	---	Y
	200989-0110	200989-1110	---	
	200989-0210	200989-1210	200989-2210	
12	200989-0012	---	200989-2012	N
	200989-0112	---	200989-2112	
	200989-0212	---	200989-2212	
14	200989-0014	---	200989-2014	N
	200989-0114	---	200989-2114	
	200989-0214	---	200989-2214	
16	200989-0016	200989-1016	200989-2016	N
	200989-0116	---	200989-2116	
	200989-0216	---	200989-2216	
18	200989-0018	---	200989-2018	Y
	200989-0118	---	---	
	200989-0218	---	---	
20	200989-0020	200989-1020	---	N
	200989-0120	200989-1120	200989-2120	
	200989-0220	---	200989-2220	
22	200989-0022	---	200989-2022	Y
	200989-0122	---	---	
	200989-0222	---	---	
24	200989-0024	---	200989-2024	N
	200989-0124	---	200989-2124	
	200989-0224	---	200989-2224	

LEGEND

200989 - X X X X

CKT SIZE

04 = 4 CKTS
.
24 = 24 CKTS

FINISHES

0 = 0.05um Au MIN. GOLD ON CONTACT
AND 2.00um MIN. MATTE TIN ON SOLDERTAIL
OVER 1.27um MIN. NICKEL UNDERPLATE OVERALL
1 = 0.38um Au MIN. GOLD ON CONTACT
AND 2.00um MIN. MATTE TIN ON SOLDERTAIL
OVER 1.27um MIN. NICKEL UNDERPLATE OVERALL
2 = 0.76um Au MIN. GOLD ON CONTACT
AND 2.00um MIN. MATTE TIN ON SOLDERTAIL
OVER 1.27um MIN. NICKEL UNDERPLATE OVERALL

PACKAGING AND CAP OPTION

0 = TUBE & WITHOUT CAP
1 = TUBE & WITH CAP
2 = TAPE & REEL (T&R) (NOT TOOLED)

THIS DRAWING CONTAINS INFORMATION THAT IS PROPRIETARY TO MOLEX ELECTRONIC TECHNOLOGIES, LLC AND SHOULD NOT BE USED WITHOUT WRITTEN PERMISSION

DIMENSION UNITS	mm
SCALE	NTS
GENERAL TOLERANCES (UNLESS SPECIFIED)	
ANGULAR TOL ±	3.0 °
4 PLACES ±	
3 PLACES ±	
2 PLACES ±	0.2
1 PLACE ±	
0 PLACES ±	
DRAFT WHERE APPLICABLE MUST REMAIN WITHIN DIMENSIONS	

CURRENT REV DESC: REMOVED OBSOLETED PART NUMBERS AS PER PCN #515183

EC NO: 826030
DRWN: PRANAA 2025/06/27
CHK'D: GGA 2025/07/01
APPR: GGA 2025/07/01

INITIAL REVISION:
DRWN: SCHEONG 2016/01/15
APPR: KHLIM 2016/11/24

THIRD ANGLE PROJECTION | DRAWING: A3-SIZE | SERIES: 200989

molex

1.27MM PITCH SLIM-GRID
VERTICAL SMT SHROUDED HEADER

PRODUCT CUSTOMER DRAWING

DOCUMENT NUMBER	DOC TYPE	DOC PART	REVISION
2009890024	PSD	000	A6

MATERIAL NUMBER	CUSTOMER	SHEET NUMBER
SEE TABLE	GENERAL MARKET	2 OF 3

DOCUMENT STATUS	P1	RELEASE DATE	2025/07/01 07:04:05

FORMAT: master-lb-prod-A3
REVISION: J1
DATE: 2021/05/01

BOARD TO BOARD (BTB) DISTANCE

HEADER	MATES WITH (RECEPTACLE)	BTB DIST.	PICTORIAL VIEW
200989	78120	7.86	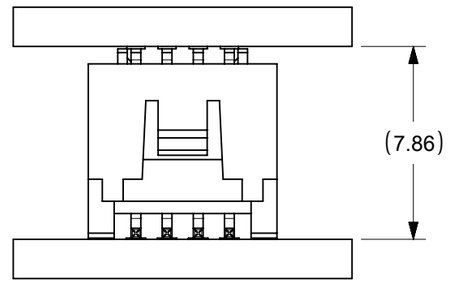

THIS DRAWING CONTAINS INFORMATION THAT IS PROPRIETARY TO MOLEX ELECTRONIC TECHNOLOGIES, LLC AND SHOULD NOT BE USED WITHOUT WRITTEN PERMISSION

DIMENSION UNITS	SCALE
mm	NTS

GENERAL TOLERANCES (UNLESS SPECIFIED)

ANGULAR TOL	± 3.0 °
4 PLACES	±
3 PLACES	±
2 PLACES	± 0.2
1 PLACE	±
0 PLACES	±

DRAFT WHERE APPLICABLE MUST REMAIN WITHIN DIMENSIONS

CURRENT REV DESC: REMOVED OBSOLETED PART NUMBERS AS PER PCN #515183

EC NO: 826030
DRWN: PRANAA 2025/06/27
CHK'D: GGA 2025/07/01
APPR: GGA 2025/07/01

INITIAL REVISION:
DRWN: SCHEONG 2016/01/15
APPR: KHLIM 2016/11/24

molex

1.27MM PITCH SLIM-GRID
VERTICAL SMT SHROUDED HEADER

PRODUCT CUSTOMER DRAWING

DOCUMENT NUMBER	DOC TYPE	DOC PART	REVISION
2009890024	PSD	000	A6

THIRD ANGLE PROJECTION	DRAWING	SERIES	MATERIAL NUMBER	CUSTOMER	SHEET NUMBER
	A3-SIZE	200989	SEE TABLE	GENERAL MARKET	3 OF 3

DOCUMENT STATUS	P1	RELEASE DATE	2025/07/01 07:04:05

FORMAT: master-tb-prod-A3
REVISION: J1
DATE: 2021/05/01