Table of lenght tolerances [mm]		
Over	Up to and including	Tolerance
0	1000	±20
1000	3000	±30
3000	5000	±40
5000	10000	±50
10000	15000	±100
15000	20000	±150
20000		±L/100

Face view

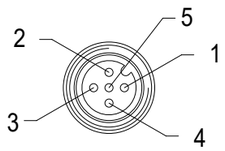

Male M12 Straight

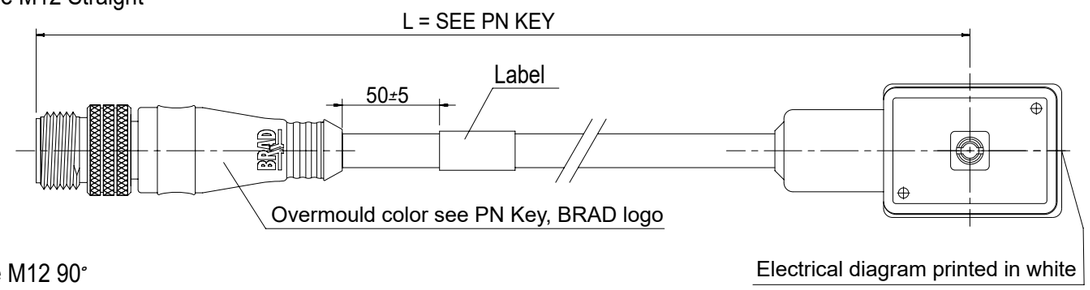

Male M12 90°

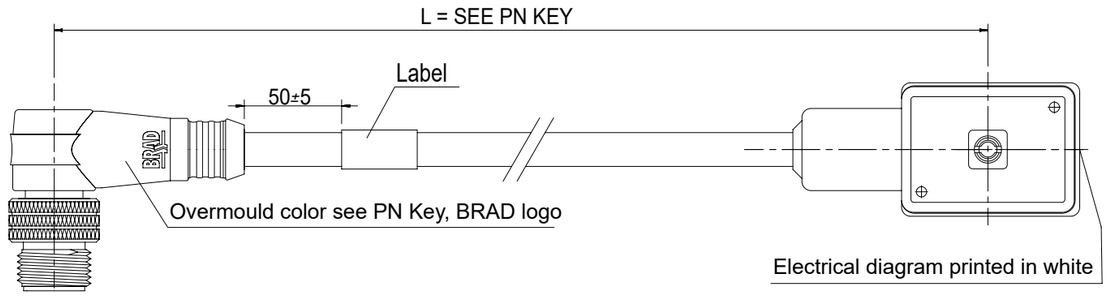

Screw & Gasket
Index of protection: IP 65

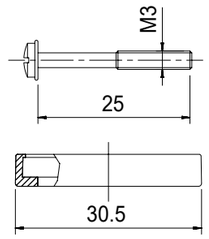

Face view

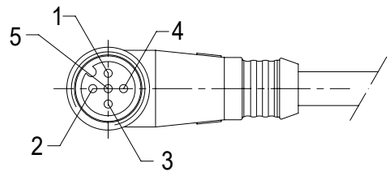

Earth position - Face View

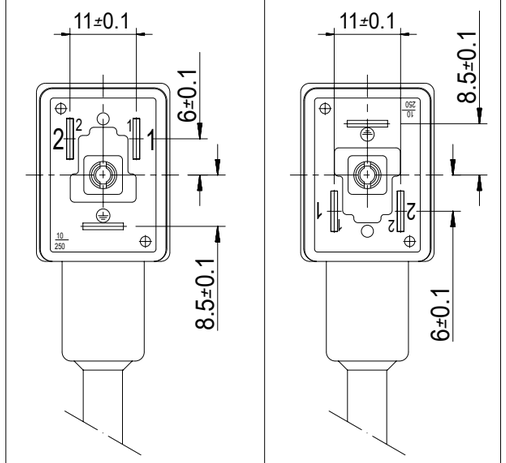

Connector Views

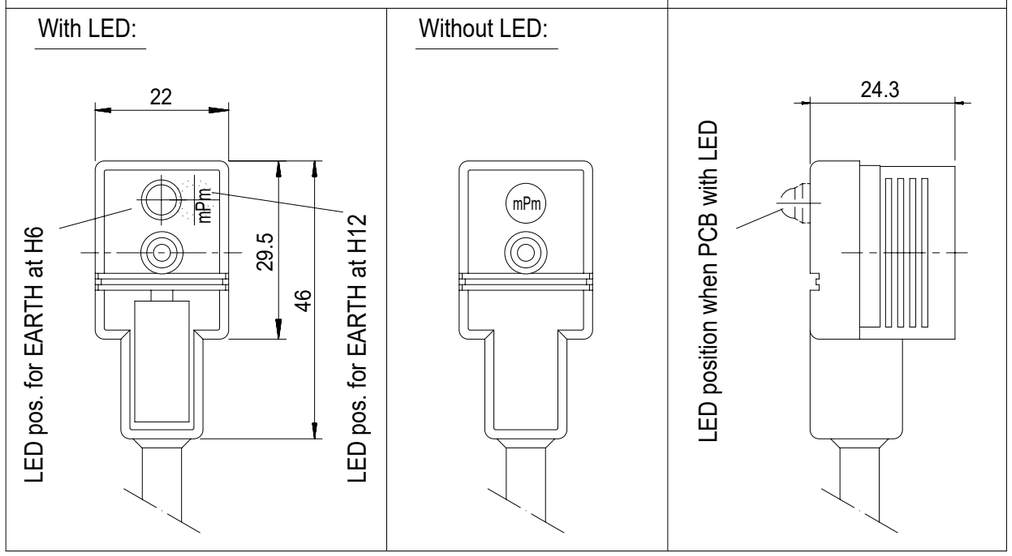

PART No MATRIX - PN Key

OPTIONS

F	8	5	X	X	X	X	X	X	X	X	X	X	X	X

- F: E = Form B Industrial Standard (11mm contact spacing)
- 8: 8 = MMC Single Keyway
- 5: 5=5 Pole
- X: Wiring details: 0 = Positive Switching (pin 3&4); 1 = Negative Switching (pin 1&4)
- X: Electrical configuration: 0 = Without LED/Without circuit; A = S0 24V Yellow LED; B = C4 24V Yellow LED; C = S0 110V Yellow LED; D = C4 110V Yellow LED; E = S0 24V Green LED; F = C4 24V Green LED; G = S0 110V Green LED; H = C4 110V Green LED; J = S0 24V Red LED; K = C4 24V Red LED; L = S0 110V Red LED; M = C4 110V Red LED; S = C4 230V Yellow LED
- X: DIN Earth Position - o'clock & M12 connector body: 0 = EARTH H6, MALE Straight; 1 = EARTH H12, MALE Straight; 2 = EARTH H6, MALE 90°; 3 = EARTH H12, MALE 90°
- X: XXX = Cable Type
- X: M = Metres; F = Feet
- X: Length: 020=2 Meters; 050=5 Meters; 200=20 Meters
- X: Coupling Nut Material: Blank=Standard; 1=Stainless Steel; 5=Delrin; 7=Teflon coat
- X: H=I/D Carrier; M12 Overmoulding color: Blank=Black Standard; Y=Yellow; A=Grey

THIS DRAWING CONTAINS INFORMATION THAT IS PROPRIETARY TO MOLEX ELECTRONIC TECHNOLOGIES, LLC AND SHOULD NOT BE USED WITHOUT WRITTEN PERMISSION

DIMENSION UNITS	SCALE
mm	NTS

GENERAL TOLERANCES (UNLESS SPECIFIED)

	MM	INCH
4 PLACES	±	±
3 PLACES	±	±
2 PLACES	±	±
1 PLACE	±	±
0 PLACES	±	±
ANGULAR TOL	± °	

DRAFT WHERE APPLICABLE MUST REMAIN WITHIN DIMENSIONS

CURRENT REV DESC: REMOVED OBSOLETED PART NUMBERS AS PER PCN#515183

EC NO: 826028
DRWN: SANATK1 2025/06/03
CHK'D: GGA 2025/06/30
APPR: GGA 2025/06/30

INITIAL REVISION:
DRWN: JMARSZALEK 2012/11/08
APPR: MIWASIECZKO 2012/11/08

molex

F85XXXXXXXXXX
DIN B IND + CORDSETS M12

PRODUCT CUSTOMER DRAWING

DOCUMENT NUMBER	DOC TYPE	DOC PART	REVISION
SD-121036-002	PSD	001	B1

FIRST ANGLE PROJECTION	DRAWING	SERIES	MATERIAL NUMBER	CUSTOMER	SHEET NUMBER
	A3-SIZE	121036	SEE SHEET 3	GENERAL MARKET	1 OF 3

DOCUMENT STATUS	P1	RELEASE DATE	2025/06/30 13:30:37

FORMAT: Mel-lega-master-tb-prod-A3
REVISION: E1
DATE: 2021/05/01

Electrical diagrams

Electrical diagram with circuit S0 (zener diode) for:

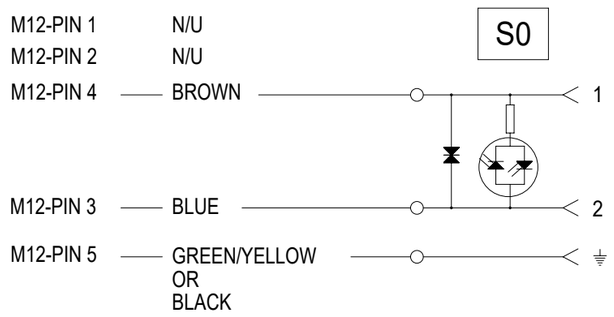

Electrical diagram with circuit C4 (VDR) for:

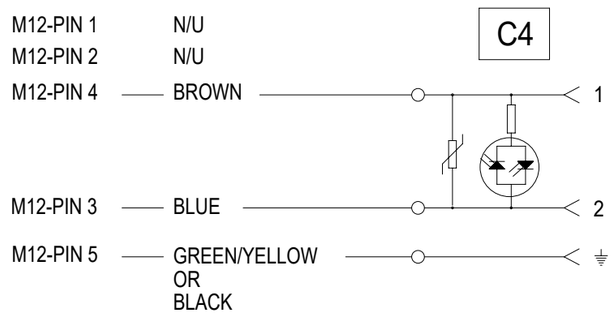

Cable type

Cable Type	Jacket Material	Jacket Color	Wire cross section	Braid
A23	PVC	Black	0.75mm²	no
A58	PVC	Black	20AWG	no
B08	PUR	Yellow	18AWG	no
E03	PVC	Black	0.34mm²	no
E12	PVC	Black	0.5mm²	no
I12	CEI PVC	Grey	0.5mm²	no
P12	PUR	Black	0.5mm²	no
P82	PUR IRR	Orange	0.34mm²	no
S26	PVC	Yellow	0.34mm²	yes
B31	PUR	Black	0.5mm²	no

THIS DRAWING CONTAINS INFORMATION THAT IS PROPRIETARY TO MOLEX ELECTRONIC TECHNOLOGIES, LLC AND SHOULD NOT BE USED WITHOUT WRITTEN PERMISSION

DIMENSION UNITS	SCALE
mm	NTS

GENERAL TOLERANCES (UNLESS SPECIFIED)

	MM	INCH
4 PLACES	±	±
3 PLACES	±	±
2 PLACES	±	±
1 PLACE	±	±
0 PLACES	±	±
ANGULAR TOL	± °	

DRAFT WHERE APPLICABLE MUST REMAIN WITHIN DIMENSIONS

CURRENT REV DESC: REMOVED OBSOLETED PART NUMBERS AS PER PCN#515183

EC NO: 826028
DRWN: SANATK1 2025/06/03
CHK'D: GGA 2025/06/30
APPR: GGA 2025/06/30

INITIAL REVISION:
DRWN: JMARSZALEK 2012/11/08
APPR: MIWASIECZKO 2012/11/08

molex

F85XXXXXXXXXX
DIN B IND + CORDSETS M12

PRODUCT CUSTOMER DRAWING

DOCUMENT NUMBER	DOC TYPE	DOC PART	REVISION
SD-121036-002	PSD	001	B1

FIRST ANGLE PROJECTION	DRAWING	SERIES	MATERIAL NUMBER	CUSTOMER	SHEET NUMBER
	A3-SIZE	121036	SEE SHEET 3	GENERAL MARKET	2 OF 3

DOCUMENT STATUS	P1	RELEASE DATE	2025/06/30 13:30:37

FORMAT: Mel-lega-master-tb-prod-A3
REVISION: E1
DATE: 2021/05/01

PART LIST

Pos.	Molex PN:	Engineering No.:
1	1210350286	F85000P12M006
2	1210360247	F850A3P12M010
3	1210360252	F850B0I12M010
4	1210360255	F850B0P12M010
5	1210360256	F850B0P12M020
6	1210360257	F850B0P12M030
7	1210360352	F850B0P12M006
8	1210360398	F850B1P12M020
9	1210360462	F850B1P12M006
10	1210360463	F850B1P12M010
11	1210360502	F850A0A58M030
12	1210360503	F850A0A58M050
13	1210360504	F850B0A58M100
14	1210360545	F850B0E12M010
15	1210360548	F850B1E12M006
16	1210360603	F850B0A58M020
17	1210360671	F850A0A58M100
18	1210360691	F850B0A58M010
19	1210360728	F850B0A23M010
20	1210360763	F850A0A58M070
21	1210360804	F850A0P12M020
22	1210360805	F850C0P12M020
23	1210360822	F850B0P12M015
24	1210360863	F850B1P12M015
25		
26		
27		
28		
29		
30		
31		
32		
33		
34		
35		
36		
37		
38		
39		
40		

THIS DRAWING CONTAINS INFORMATION THAT IS PROPRIETARY TO MOLEX ELECTRONIC TECHNOLOGIES, LLC AND SHOULD NOT BE USED WITHOUT WRITTEN PERMISSION

DIMENSION UNITS	SCALE
mm	NTS

GENERAL TOLERANCES (UNLESS SPECIFIED)

	MM	INCH
4 PLACES	±	±
3 PLACES	±	±
2 PLACES	±	±
1 PLACE	±	±
0 PLACES	±	±
ANGULAR TOL	± °	

DRAFT WHERE APPLICABLE MUST REMAIN WITHIN DIMENSIONS

CURRENT REV DESC: REMOVED OBSOLETED PART NUMBERS AS PER PCN#515183

EC NO: 826028

DRWN:	SANATK1	2025/06/03
CHK'D:	GGA	2025/06/30
APPR:	GGA	2025/06/30

INITIAL REVISION:

DRWN:	JMARSZALEK	2012/11/08
APPR:	MIWASIECZKO	2012/11/08

FIRST ANGLE PROJECTION | DRAWING: A3-SIZE | SERIES: 121036

molex

F85XXXXXXXXXX
DIN B IND + CORDSETS M12

PRODUCT CUSTOMER DRAWING

DOCUMENT NUMBER	DOC TYPE	DOC PART	REVISION
SD-121036-002	PSD	001	B1

MATERIAL NUMBER	CUSTOMER	SHEET NUMBER
SEE SHEET 3	GENERAL MARKET	3 OF 3

DOCUMENT STATUS	P1	RELEASE DATE	2025/06/30 13:30:37

FORMAT: Mel-lega-master-lb-prod-A3
REVISION: E1
DATE: 2021/05/01