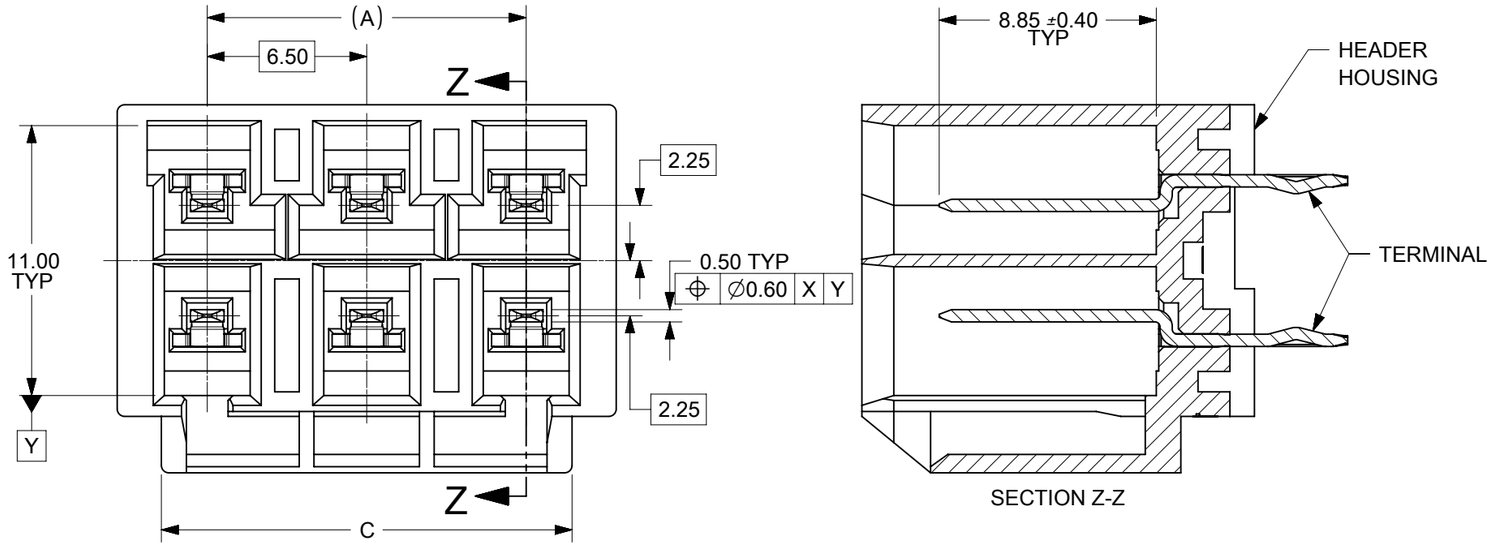

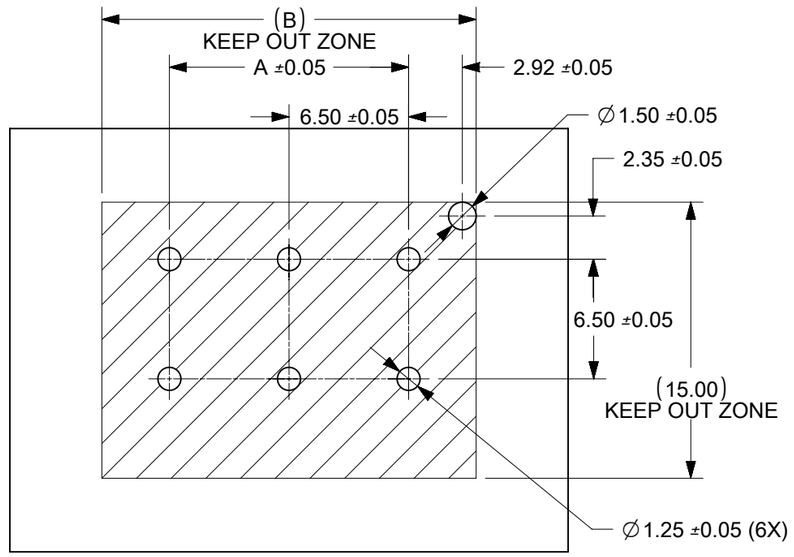

RECOMMENDED PCB BOARD HOLE DIMENSION FOR WITHOUT TPA
(MOUNTING SIDE,THICKNESS: 1.60mm)

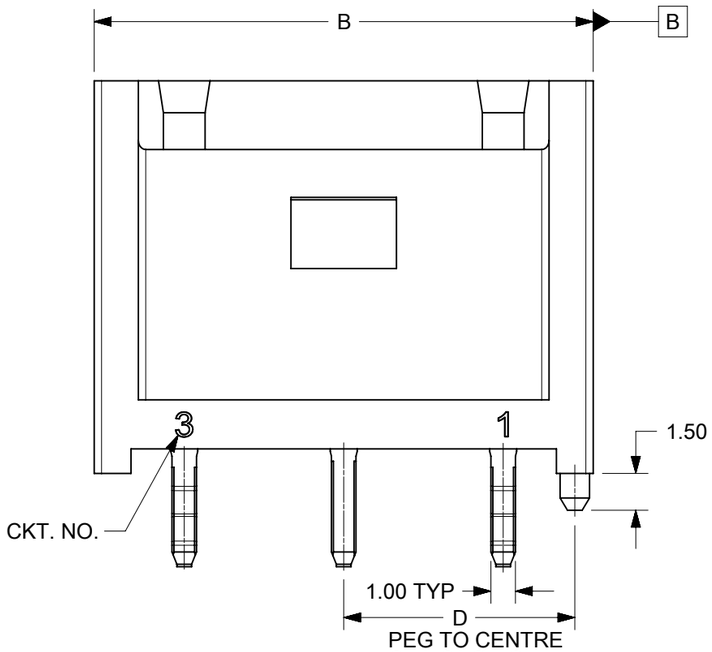

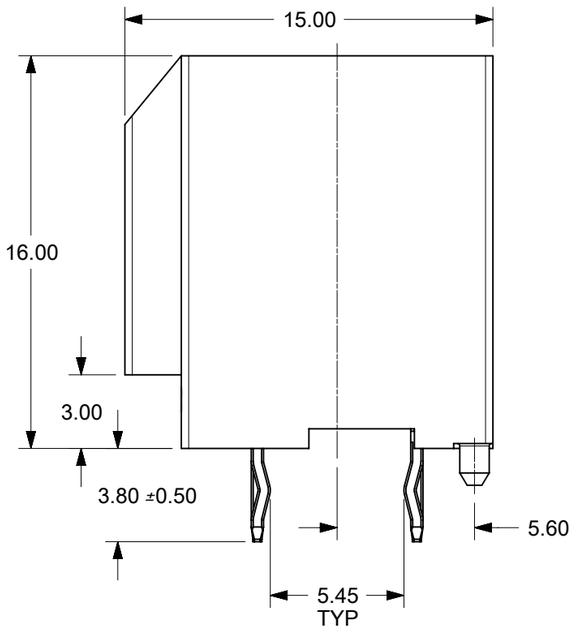

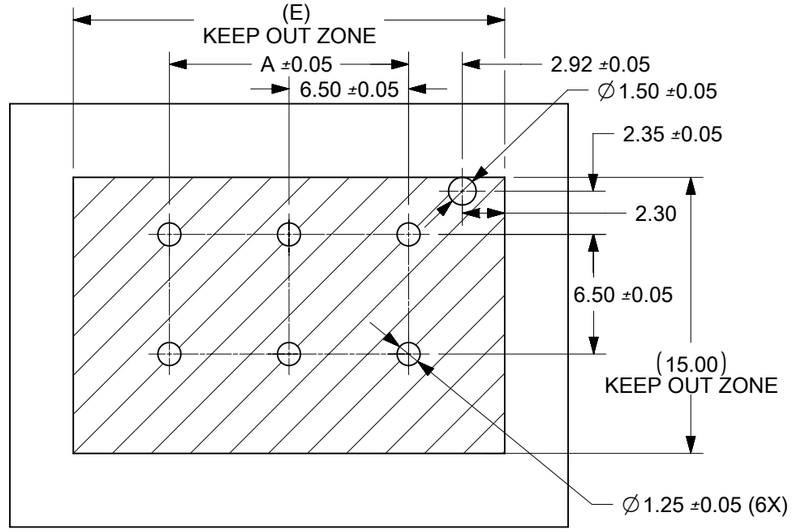

RECOMMENDED PCB BOARD HOLE DIMENSION FOR WITH TPA
(MOUNTING SIDE,THICKNESS: 1.60mm)

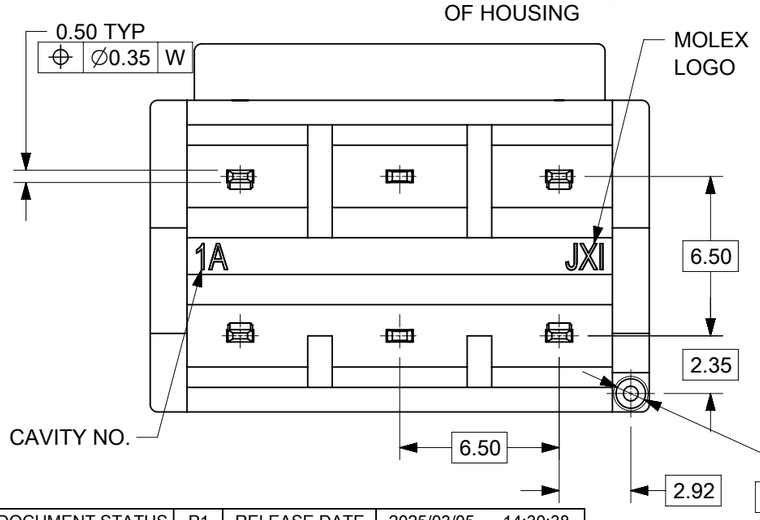

NOTES:
1.MATERIALS:
HOUSING: POLYAMIDE(PA), GLASS FILLED,UL94-0
TERMINAL: COPPER ALLOY
2.FINISHES:
TERMINAL: 1.27µM MIN MATTE TIN OVER 1.27µM MIN NICKEL UNDERPLATE.
3.PRODUCT SPECIFICATION: PS-151048-0001
4.PACKAGING SPECIFICATION: REFER TO TABLE
5.REFER TO COSMETIC SPECIFICATION: PS-45499-002(CLASS B)
6.MATES WITH: 151049 SERIES
▽7 REFER TO THIS DIMENSION FOR PCB LAYOUT OF CONNECTORS WITH TPA.

2	-	7.34	7.34	2.92	10.45	REFER TO PAGE 2
4	6.50	13.84	10.74	6.17	16.95	REFER TO PAGE 3
6	13.00	20.34	16.74	9.42	23.45	REFER TO PAGE 4
CKT. NO.	A	B	C	D	▽7 E	MATERIAL PART NO.

THIS DRAWING CONTAINS INFORMATION THAT IS PROPRIETARY TO MOLEX ELECTRONIC TECHNOLOGIES, LLC AND SHOULD NOT BE USED WITHOUT WRITTEN PERMISSION

DIMENSION UNITS: mm | SCALE: NTS
GENERAL TOLERANCES (UNLESS SPECIFIED)
ANGULAR TOL ± 3.0°
4 PLACES ±
3 PLACES ±
2 PLACES ± 0.2
1 PLACE ±
0 PLACES ±
DRAFT WHERE APPLICABLE MUST REMAIN WITHIN DIMENSIONS

CURRENT REV DESC: POTTING DETAILS ADDED
EC NO: 814389
DRWN: PRADEH3 2025/01/22
CHK'D: SMURUGESAN 2025/03/05
APPR: SMURUGESAN 2025/03/05
INITIAL REVISION:
DRWN: EANG 2014/03/13
APPR: KHLIM 2015/07/22

THIRD ANGLE PROJECTION | DRAWING: A3-SIZE | SERIES: 151048

molex

SALES DRAWING
6.5 HEADER ASSY WIRE TO BOARD CONNECTOR

PRODUCT CUSTOMER DRAWING

DOCUMENT NUMBER	DOC TYPE	DOC PART	REVISION
SD-151048-0001	PSD	001	A4

MATERIAL NUMBER	CUSTOMER	SHEET NUMBER
SEE TABLE	GENERAL MARKET	1 OF 4

DOCUMENT STATUS	P1	RELEASE DATE	2025/03/05 14:30:38

HEADER ASSY WITH POLARIZATION FEATURES AND COLORS 2CKTS

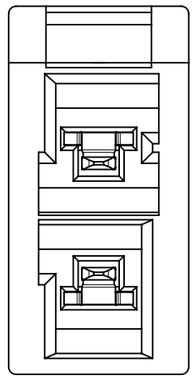

1 151048*200
ORANGE

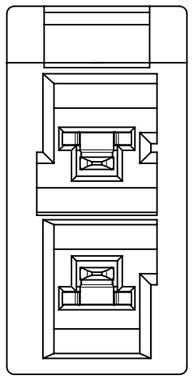

2 151048*201
BLUE

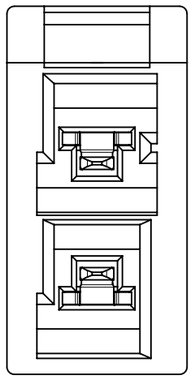

3 151048*202
GREY

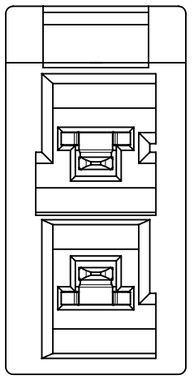

4 151048*203
YELLOW

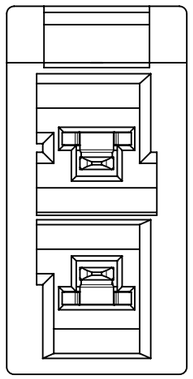

5 151048*204
PURPLE

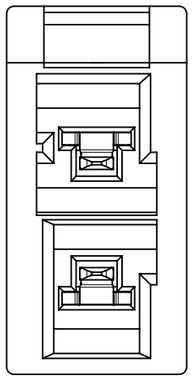

6 151048*205
PINK

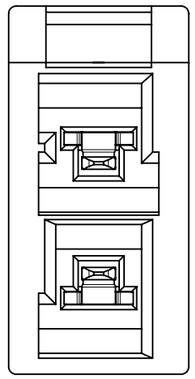

7 151048*206
BLACK

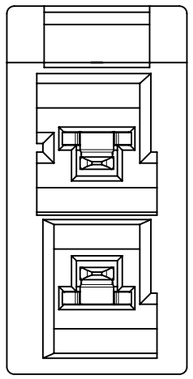

8 151048*207
GREEN

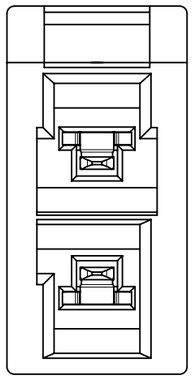

9 151048*208
BROWN

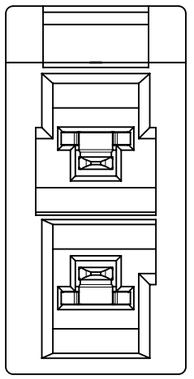

10 151048*209
RED

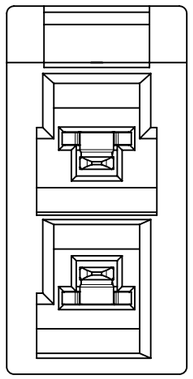

11 151048*210
MINT

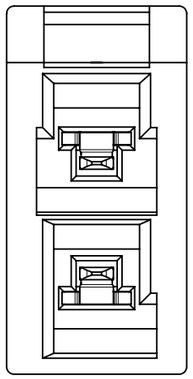

12 151048*211
NATURAL(WHITE)

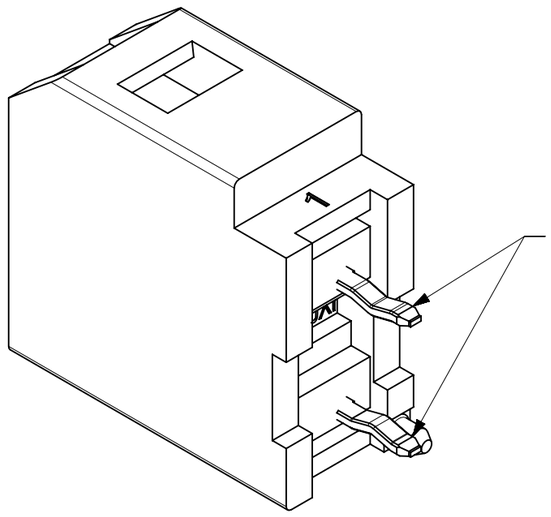

PART NO. LEGEND

151048- X X XX

COLOR AND POLORIZARION
CKT NO.
PACKAGING (TRAY)
AND OTHERS

CONFIG	ASSEMBLY	COLOR	STANDARD COLOR	CUSTOM COLOR	PACKAGING
1	1510482200	ORANGE	*		PK-151048-0001 (TUBE)
2	1510482201	BLUE	*		
3	1510482202	GREY		*	
4	1510482203	YELLOW	*		
5	1510482204	PURPLE		*	
6	1510482205	PINK		*	
7	1510482206	BLACK	*		
8	1510482207	GREEN		*	
9	1510482208	BROWN		*	
10	1510482209	RED	*		
11	1510482210	MINT		*	
12	1510482211	NATURAL (WHITE)	*		

CONFIG	ASSEMBLY	COLOR	STANDARD COLOR	CUSTOM COLOR	PACKAGING
1	1510481200	ORANGE	*		PK-151048-0002 (TRAY)
2	1510481201	BLUE	*		
3	1510481202	GREY		*	
4	1510481203	YELLOW	*		
5	1510481204	PURPLE		*	
6	1510481205	PINK		*	
7	1510481206	BLACK	*		
8	1510481207	GREEN		*	
9	1510481208	BROWN		*	
10	1510481209	RED	*		
11	1510481210	MINT		*	
12	1510481211	NATURAL (WHITE)	*		

THIS DRAWING CONTAINS INFORMATION THAT IS PROPRIETARY TO MOLEX ELECTRONIC TECHNOLOGIES, LLC AND SHOULD NOT BE USED WITHOUT WRITTEN PERMISSION

DIMENSION UNITS	SCALE
mm	NTS

GENERAL TOLERANCES (UNLESS SPECIFIED)

ANGULAR TOL	± 3.0 °
4 PLACES	±
3 PLACES	±
2 PLACES	± 0.2
1 PLACE	±
0 PLACES	±

DRAFT WHERE APPLICABLE MUST REMAIN WITHIN DIMENSIONS

CURRENT REV DESC: POTTING DETAILS ADDED

EC NO: 814389
DRWN: PRADEH3 2025/01/22
CHK'D: SMURUGESAN 2025/03/05
APPR: SMURUGESAN 2025/03/05

INITIAL REVISION:
DRWN: EANG 2014/03/13
APPR: KHLIM 2015/07/22

molex

SALES DRAWING
6.5 HEADER ASSY WIRE TO BOARD CONNECTOR

PRODUCT CUSTOMER DRAWING

DOCUMENT NUMBER	DOC TYPE	DOC PART	REVISION
SD-151048-0001	PSD	001	A4

THIRD ANGLE PROJECTION	DRAWING	SERIES
	A3-SIZE	151048

MATERIAL NUMBER	CUSTOMER	SHEET NUMBER
SEE TABLE	GENERAL MARKET	2 OF 4

DOCUMENT STATUS	P1	RELEASE DATE	2025/03/05 14:30:38

FORMAT: mxgdt_template_A3
REVISION: H
DATE: 2018/01/16

HEADER ASSY WITH POLARIZATION FEATURES AND COLORS 4CKTS

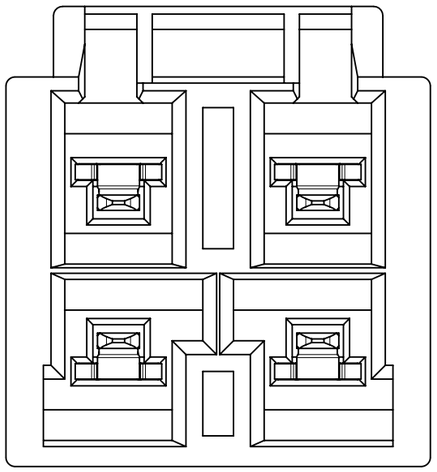

(1) 151048*401
BLUE

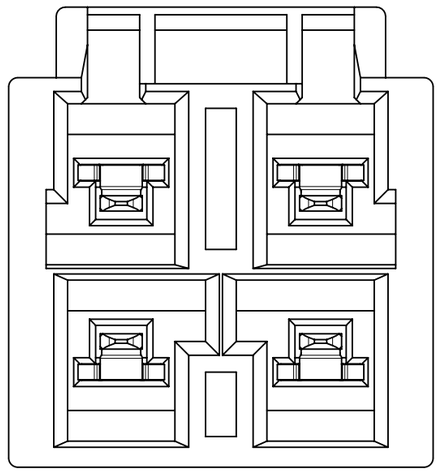

(2) 151048*406
BLACK

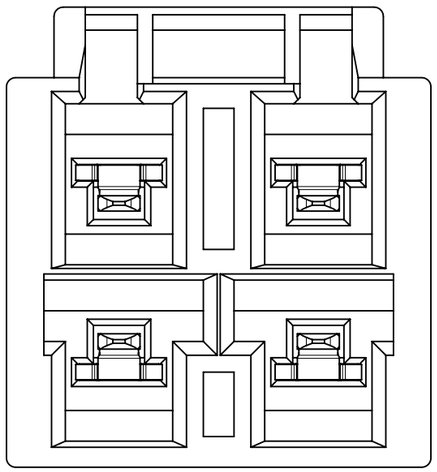

(3) 151048*411
NATURAL(WHITE)

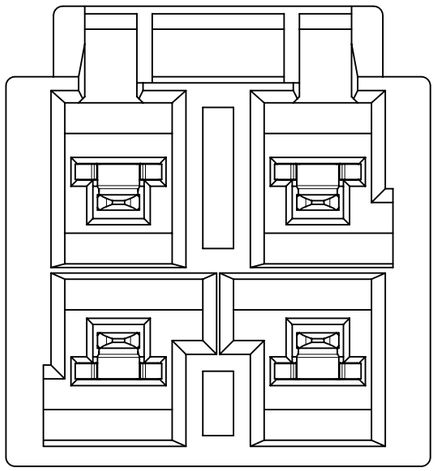

(4) 151048*409 (A1)
RED

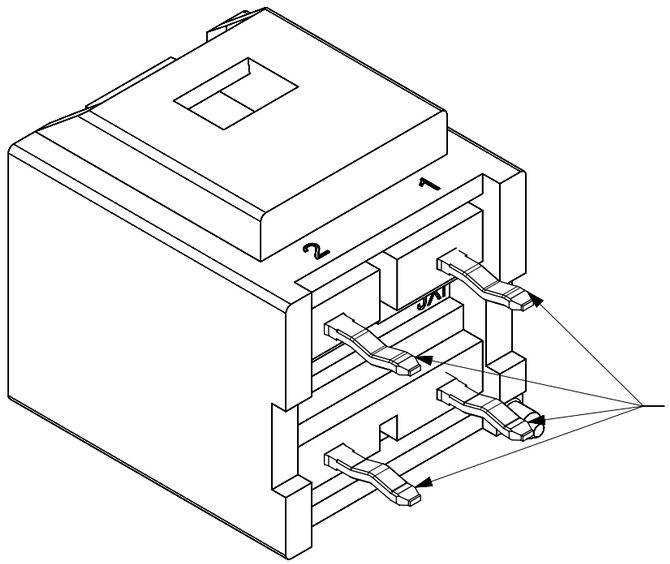

PART NO. LEGEND

151048- X X XX

- XX: COLOR AND POLORIZARION
- X: CKT NO.
- X: PACKAGING (TRAY) AND OTHERS

CONFIG	ASSEMBLY	COLOR	PACKAGING
1	1510481401	BLUE	PK-151048-0002
2	1510481406	BLACK	
3	1510481411	NATURAL (WHITE)	
(A2) 4	1510481409	RED	

THIS DRAWING CONTAINS INFORMATION THAT IS PROPRIETARY TO MOLEX ELECTRONIC TECHNOLOGIES, LLC AND SHOULD NOT BE USED WITHOUT WRITTEN PERMISSION

DIMENSION UNITS	SCALE
mm	NTS

GENERAL TOLERANCES (UNLESS SPECIFIED)

ANGULAR TOL	± 3.0 °
4 PLACES	±
3 PLACES	±
2 PLACES	± 0.2
1 PLACE	±
0 PLACES	±

DRAFT WHERE APPLICABLE MUST REMAIN WITHIN DIMENSIONS

CURRENT REV DESC: POTTING DETAILS ADDED

EC NO: 814389

DRWN:	PRADEH3	2025/01/22
CHK'D:	SMURUGESAN	2025/03/05
APPR:	SMURUGESAN	2025/03/05

INITIAL REVISION:

DRWN:	EANG	2014/03/13
APPR:	KHLIM	2015/07/22

THIRD ANGLE PROJECTION | DRAWING: A3-SIZE | SERIES: 151048

molex

SALES DRAWING
6.5 HEADER ASSY WIRE TO BOARD CONNECTOR

PRODUCT CUSTOMER DRAWING

DOCUMENT NUMBER	DOC TYPE	DOC PART	REVISION
SD-151048-0001	PSD	001	A4

MATERIAL NUMBER	CUSTOMER	SHEET NUMBER
SEE TABLE	GENERAL MARKET	3 OF 4

DOCUMENT STATUS	P1	RELEASE DATE	2025/03/05 14:30:38

FORMAT: master-Sheet-A3
REVISION: H
DATE: 2018/01/18

HEADER ASSY WITH POLARIZATION FEATURES AND COLORS 6CKTS

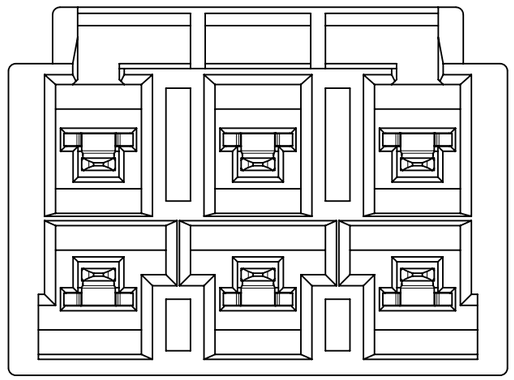

1 151048*601
BLUE

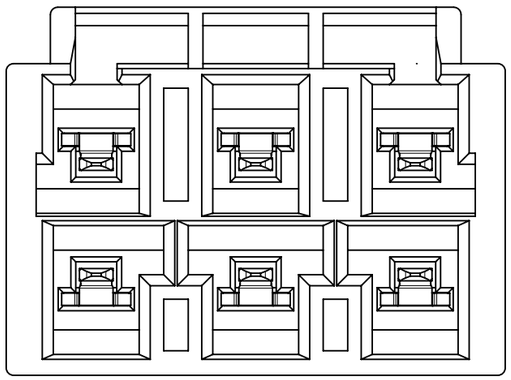

2 151048*606
BLACK

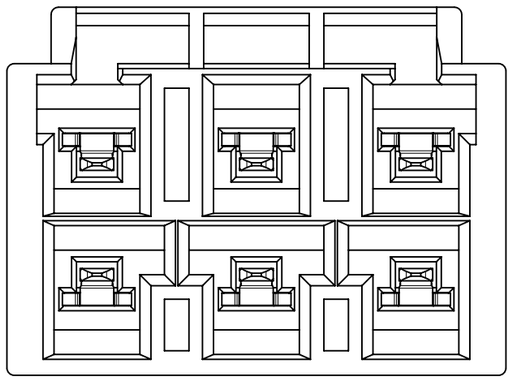

3 151048*609
RED

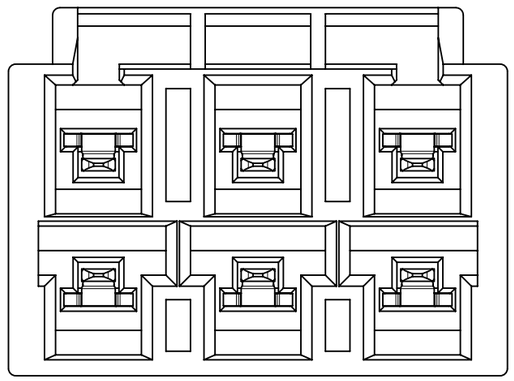

4 151048*611
NATURAL(WHITE)

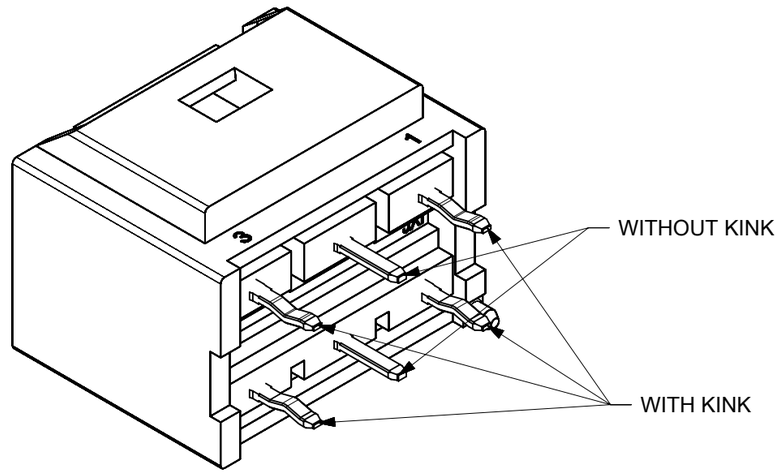

PART NO. LEGEND

151048- X X XX

COLOR AND POLORIZARION
CKT NO.
PACKAGING (TRAY)
AND OTHERS

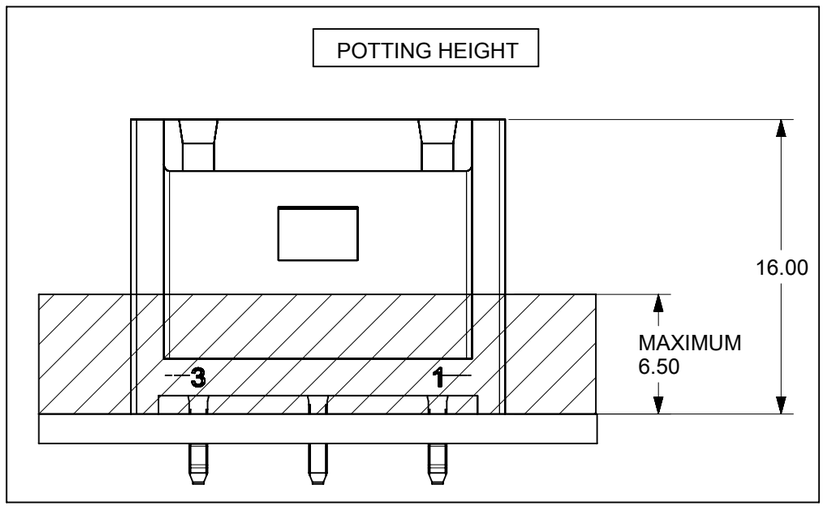

CONFIG	ASSEMBLY	COLOR	PACKAGING
1	1510481601	BLUE	PK-151048-0002
2	1510481606	BLACK	
3	1510481609	RED	
4	1510481611	NATURAL (WHITE)	

THIS DRAWING CONTAINS INFORMATION THAT IS PROPRIETARY TO MOLEX ELECTRONIC TECHNOLOGIES, LLC AND SHOULD NOT BE USED WITHOUT WRITTEN PERMISSION

DIMENSION UNITS	SCALE
mm	NTS

GENERAL TOLERANCES (UNLESS SPECIFIED)

ANGULAR TOL	±	3.0 °
4 PLACES	±	
3 PLACES	±	
2 PLACES	±	0.2
1 PLACE	±	
0 PLACES	±	

DRAFT WHERE APPLICABLE MUST REMAIN WITHIN DIMENSIONS

CURRENT REV DESC: POTTING DETAILS ADDED

EC NO: 814389
DRWN: PRADEH3 2025/01/22
CHK'D: SMURUGESAN 2025/03/05
APPR: SMURUGESAN 2025/03/05

INITIAL REVISION:
DRWN: EANG 2014/03/13
APPR: KHLIM 2015/07/22

THIRD ANGLE PROJECTION | DRAWING: A3-SIZE | SERIES: 151048

molex

SALES DRAWING
6.5 HEADER ASSY WIRE TO BOARD CONNECTOR

PRODUCT CUSTOMER DRAWING

DOCUMENT NUMBER	DOC TYPE	DOC PART	REVISION
SD-151048-0001	PSD	001	A4

MATERIAL NUMBER	CUSTOMER	SHEET NUMBER
SEE TABLE	GENERAL MARKET	4 OF 4

DOCUMENT STATUS	P1	RELEASE DATE	2025/03/05 14:30:38

FORMAT: master-tb-mod-A3
REVISION: H
DATE: 2018/01/18