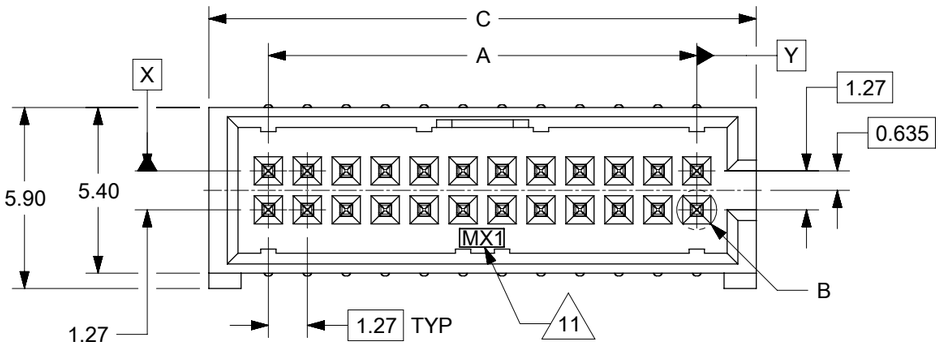

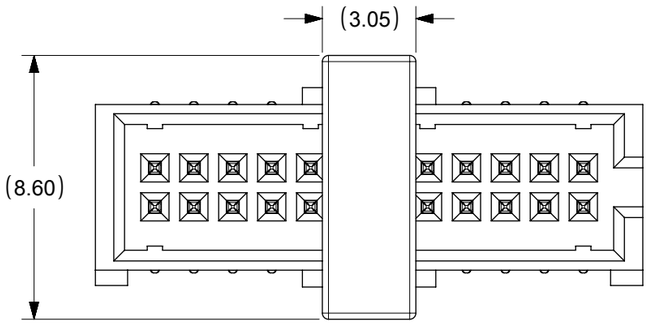

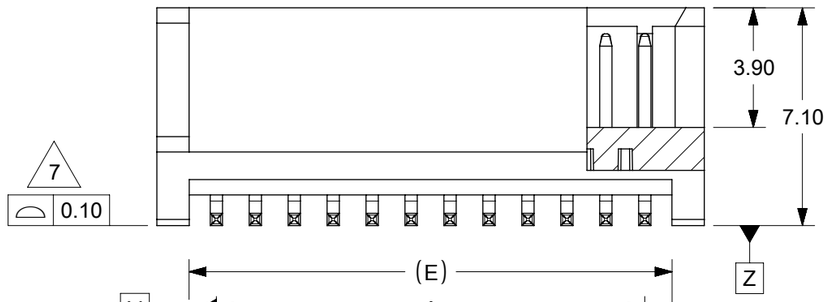

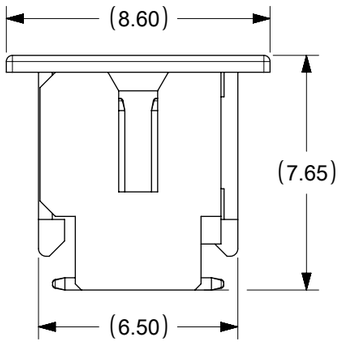

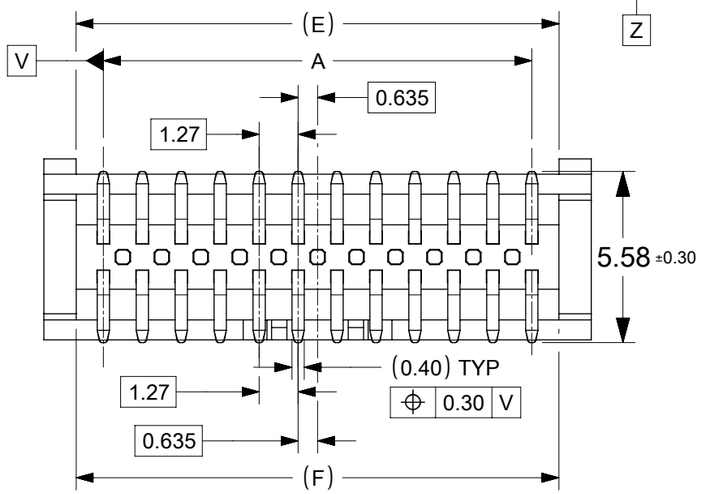

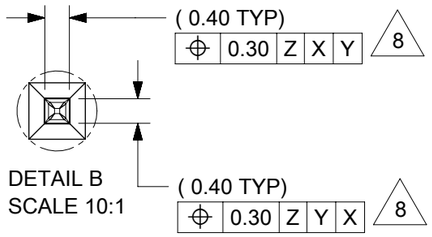

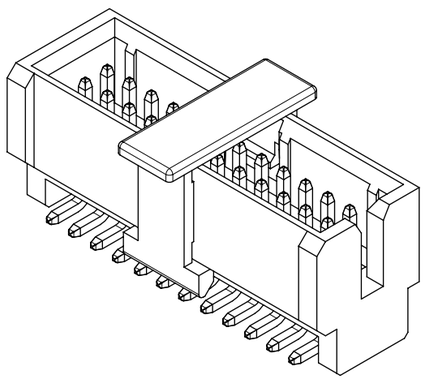

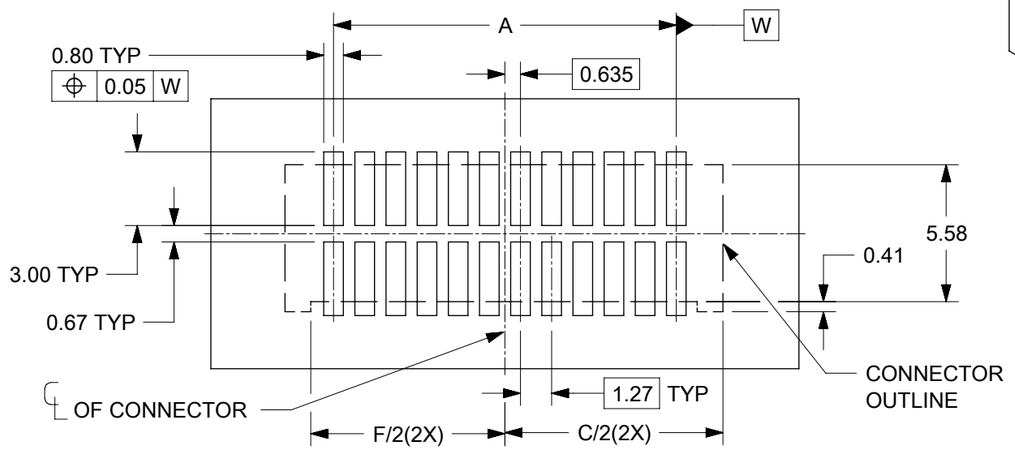

RECOMMENDED PCB LAYOUT
TOLERANCE ±0.05

CKT SIZE	DIMENSION					
	A	B	C	D	E	F
4	1.27	3.25	5.15	-	3.05	3.04
6	2.54	4.52	6.42	4.85	4.32	4.31
8	3.81	5.79	7.69	4.85	5.59	5.58
10	5.08	7.06	8.96	4.85	6.86	6.85
12	6.35	8.33	10.23	4.85	8.13	8.12
14	7.62	9.60	11.50	4.85	9.40	9.39
16	8.89	10.87	12.77	4.85	10.67	10.66
18	10.16	12.14	14.04	4.85	11.94	11.93
20	11.43	13.41	15.31	4.85	13.21	13.20
22	12.70	14.68	16.58	4.85	14.48	14.47
24	13.97	15.95	17.85	4.85	15.75	15.74

NOTES:
1. FOR ILLUSTRATION PURPOSES, 24 CIRCUIT SIZE WAFER IS SHOWN.
2. MATERIAL :
   HOUSING : LIQUID CRYSTALLINE POLYMER (LCP), GLASS-FILLED UL94V-0, BLACK
   BANDOLIER PIN :COPPER ALLOY, 0.40MM SQ. PIN
   PICK AND PLACE CAP: POLYAMIDE (PA), GLASS-FILLED, UL94V-0, BLACK
3. FINISHES: SEE SHEET 2
4. PRODUCT SPECIFICATION: 2009890001 (PS)
5. PACKAGING SPECIFICATION: 2009890001(PK)
6. MATES WITH: 78120 SERIES
7. COPLANARITY IS TO BE MEASURED BY RESTING THE SOLDER TAIL ON A GAUGE SURFACE
8. POSITIONING TO BE CONTROLLED BASED ON PIN TIP
9. BEND DEPRESSION ON SMT TAIL IS ACCEPTACLE SO LONG AS IT DOES NOT AFFECT THE OVERALL COPLANARITY OF THE TAIL.
10. PARTS CONFORMS TO CLASS "B" REQUIREMENT OF COSMETIC SPECIFICATION PS-45499-002
11. MOLEX LOGO AND CAVITY LOCATED AS SHOWN.
12. NON-FUNCTIONAL CORING IS SUBJECTED TO CHANGES WITHOUT NOTICE.
13. THE ABOVE 24 CKT SHOWN IS FOR ILLUSTRATION ONLY.

THIS DRAWING CONTAINS INFORMATION THAT IS PROPRIETARY TO MOLEX ELECTRONIC TECHNOLOGIES, LLC AND SHOULD NOT BE USED WITHOUT WRITTEN PERMISSION

DIMENSION UNITS	mm
SCALE	NTS
GENERAL TOLERANCES (UNLESS SPECIFIED)	
ANGULAR TOL ±	3.0 °
4 PLACES ±	
3 PLACES ±	
2 PLACES ±	0.2
1 PLACE ±	
0 PLACES ±	
DRAFT WHERE APPLICABLE MUST REMAIN WITHIN DIMENSIONS	

CURRENT REV DESC: REMASTERED & BTB DISTANCE UPDATE

EC NO: 664214
DRWN: KSUTAR 2021/05/07
CHK'D: ABABUPS 2021/05/18
APPR: MRAMAKRISHNA 2021/05/18

INITIAL REVISION:
DRWN: SCHEONG 2016/01/15
APPR: KHLIM 2016/11/24

THIRD ANGLE PROJECTION | DRAWING: A3-SIZE | SERIES: 200989

molex

1.27MM PITCH SLIM-GRID
VERTICAL SMT SHROUDED HEADER

PRODUCT CUSTOMER DRAWING

DOCUMENT NUMBER	DOC TYPE	DOC PART	REVISION
2009890024	PSD	000	A4

MATERIAL NUMBER	CUSTOMER	SHEET NUMBER
SEE TABLE	GENERAL MARKET	1 OF 3

DOCUMENT STATUS	P1	RELEASE DATE	2021/05/18 14:42:58

FORMAT: master-tb-prod-A3
REVISION: J
DATE: 2020/01/14

CKT SIZE	ASSEMBLY WITHOUT CAP IN TUBE P/N	ASSEMBLY WITH CAP IN TUBE P/N	ASSEMBLY WITH CAP IN T&R P/N
4	200989-0004	200989-1004	200989-2004
	200989-0104	200989-1104	200989-2104
	200989-0204	200989-1204	200989-2204
6	200989-0006	200989-1006	200989-2006
	200989-0106	200989-1106	200989-2106
	200989-0206	200989-1206	200989-2206
8	200989-0008	200989-1008	200989-2008
	200989-0108	200989-1108	200989-2108
	200989-0208	200989-1208	200989-2208
10	200989-0010	200989-1010	200989-2010
	200989-0110	200989-1110	200989-2110
	200989-0210	200989-1210	200989-2210
12	200989-0012	200989-1012	200989-2012
	200989-0112	200989-1112	200989-2112
	200989-0212	200989-1212	200989-2212
14	200989-0014	200989-1014	200989-2014
	200989-0114	200989-1114	200989-2114
	200989-0214	200989-1214	200989-2214
16	200989-0016	200989-1016	200989-2016
	200989-0116	200989-1116	200989-2116
	200989-0216	200989-1216	200989-2216
18	200989-0018	200989-1018	200989-2018
	200989-0118	200989-1118	200989-2118
	200989-0218	200989-1218	200989-2218
20	200989-0020	200989-1020	200989-2020
	200989-0120	200989-1120	200989-2120
	200989-0220	200989-1220	200989-2220
22	200989-0022	200989-1022	200989-2022
	200989-0122	200989-1122	200989-2122
	200989-0222	200989-1222	200989-2222
24	200989-0024	200989-1024	200989-2024
	200989-0124	200989-1124	200989-2124
	200989-0224	200989-1224	200989-2224

LEGEND

200989 - X X X X

CKT SIZE

04 = 4 CKTS
.
24 = 24 CKTS

FINISHES

0 = 0.05um Au MIN. GOLD ON CONTACT
AND 2.00um MIN. MATTE TIN ON SOLDERTAIL
OVER 1.27um MIN. NICKEL UNDERPLATE OVERALL
1 = 0.38um Au MIN. GOLD ON CONTACT
AND 2.00um MIN. MATTE TIN ON SOLDERTAIL
OVER 1.27um MIN. NICKEL UNDERPLATE OVERALL
2 = 0.76um Au MIN. GOLD ON CONTACT
AND 2.00um MIN. MATTE TIN ON SOLDERTAIL
OVER 1.27um MIN. NICKEL UNDERPLATE OVERALL

PACKAGING AND CAP OPTION

0 = TUBE & WITHOUT CAP
1 = TUBE & WITH CAP
2 = TAPE & REEL (T&R) (NOT TOOLED)

THIS DRAWING CONTAINS INFORMATION THAT IS PROPRIETARY TO MOLEX ELECTRONIC TECHNOLOGIES, LLC AND SHOULD NOT BE USED WITHOUT WRITTEN PERMISSION

DIMENSION UNITS	mm
SCALE	NTS
GENERAL TOLERANCES (UNLESS SPECIFIED)	
ANGULAR TOL ±	3.0 °
4 PLACES ±	
3 PLACES ±	
2 PLACES ±	0.2
1 PLACE ±	
0 PLACES ±	
DRAFT WHERE APPLICABLE MUST REMAIN WITHIN DIMENSIONS	

CURRENT REV DESC: REMASTERED & BTB DISTANCE UPDATE

EC NO: 664214
DRWN: KSUTAR 2021/05/07
CHK'D: ABABUPS 2021/05/18
APPR: MRAMAKRISHNA 2021/05/18

INITIAL REVISION:
DRWN: SCHEONG 2016/01/15
APPR: KHLIM 2016/11/24

molex

1.27MM PITCH SLIM-GRID
VERTICAL SMT SHROUDED HEADER

PRODUCT CUSTOMER DRAWING

DOCUMENT NUMBER	DOC TYPE	DOC PART	REVISION
2009890024	PSD	000	A4

THIRD ANGLE PROJECTION	DRAWING	SERIES	MATERIAL NUMBER	CUSTOMER	SHEET NUMBER
	A3-SIZE	200989	SEE TABLE	GENERAL MARKET	2 OF 3

DOCUMENT STATUS	P1	RELEASE DATE	2021/05/18 14:42:58

FORMAT: master-lb-prod-A3
REVISION: J
DATE: 2020/01/14

BOARD TO BOARD (BTB) DISTANCE

HEADER	MATES WITH (RECEPTACLE)	BTB DIST.	PICTORIAL VIEW
200989	78120	7.86	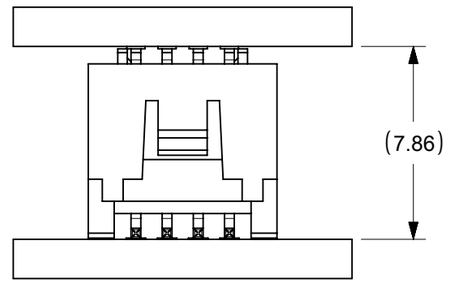

THIS DRAWING CONTAINS INFORMATION THAT IS PROPRIETARY TO MOLEX ELECTRONIC TECHNOLOGIES, LLC AND SHOULD NOT BE USED WITHOUT WRITTEN PERMISSION

DIMENSION UNITS	SCALE
mm	NTS

GENERAL TOLERANCES (UNLESS SPECIFIED)

ANGULAR TOL	± 3.0 °
4 PLACES	±
3 PLACES	±
2 PLACES	± 0.2
1 PLACE	±
0 PLACES	±

DRAFT WHERE APPLICABLE MUST REMAIN WITHIN DIMENSIONS

CURRENT REV DESC: REMASTERED & BTB DISTANCE UPDATE

EC NO: 664214

DRWN:	KSUTAR	2021/05/07
CHK'D:	ABABUPS	2021/05/18
APPR:	MRAMAKRISHNA	2021/05/18

INITIAL REVISION:

DRWN:	SCHEONG	2016/01/15
APPR:	KHLIM	2016/11/24

molex

1.27MM PITCH SLIM-GRID
VERTICAL SMT SHROUDED HEADER

PRODUCT CUSTOMER DRAWING

DOCUMENT NUMBER	DOC TYPE	DOC PART	REVISION
2009890024	PSD	000	A4

THIRD ANGLE PROJECTION	DRAWING	SERIES	MATERIAL NUMBER	CUSTOMER	SHEET NUMBER
	A3-SIZE	200989	SEE TABLE	GENERAL MARKET	3 OF 3

DOCUMENT STATUS	P1	RELEASE DATE	2021/05/18 14:42:58

FORMAT: master-lb-prod-A3
REVISION: J
DATE: 2020/01/14