

PCB LAYOUT

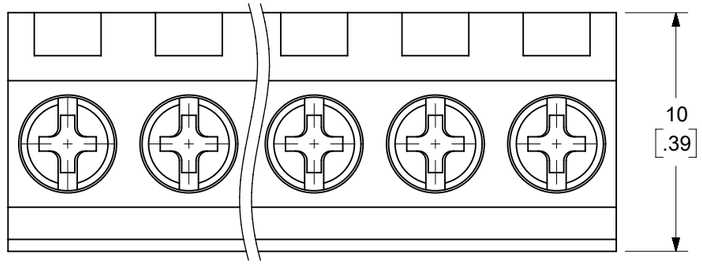

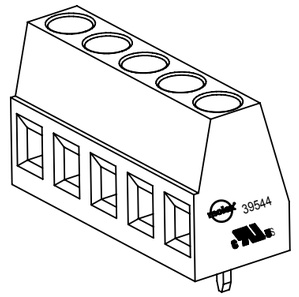

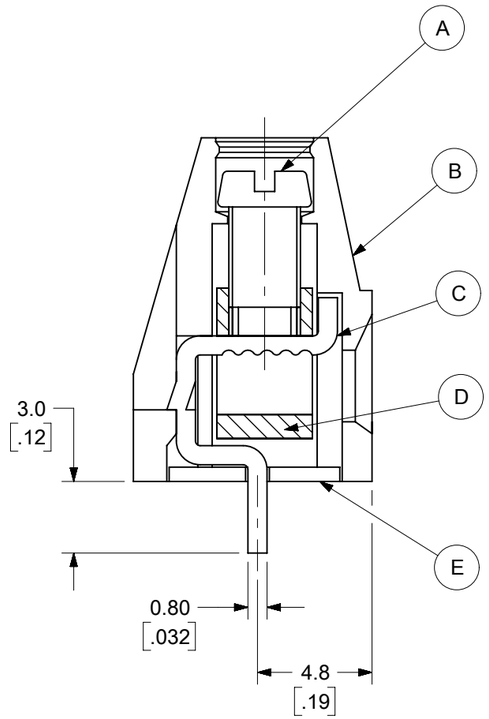

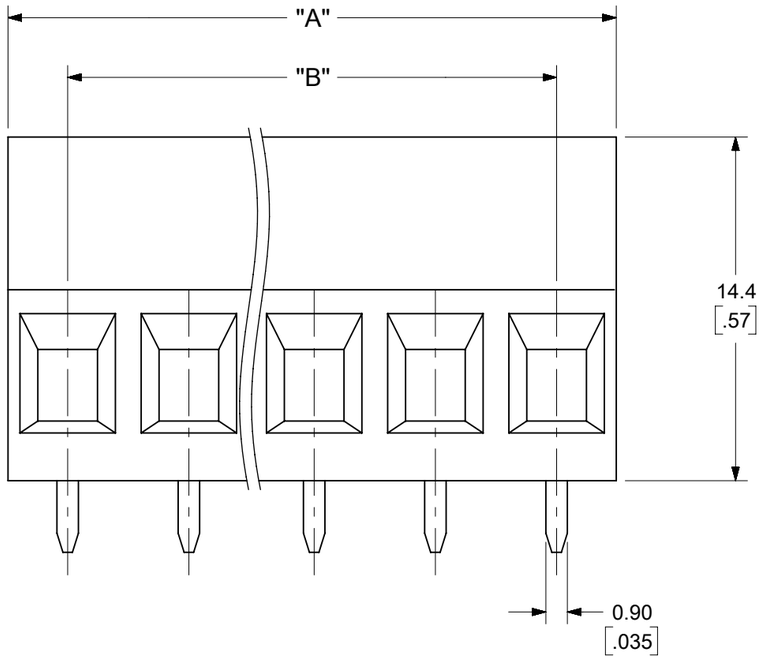

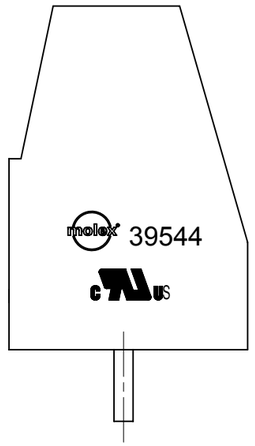

SPECIFICATIONS:

1. MATERIAL:
   (A). SCREW: C1010
   (B). BODY: PA66
   (C). TERMINAL: BRASS
   (D). CAGE: BRASS
   (E). COVER: PA66
2. WIRE RANGE: 30 - 12AWG
3. ELECTRICAL RATING: 300V, 15A.
4. MAX TORQUE: 4.5IN-LBS.
5. WIRE STRIP LENGTH: 5.00mm.
6. INSULATION RESISTANCE: DC 500V, 500M.
7. OPERATING TEMPERATURE: -40°C to +105°C.
8. A = N x P
9. B = (N - 1) x P
10. P (PITCH) = 5.08mm (.200").
11. N = NUMBER OF POSITIONS AVAILABLE 2 THROUGH 24.
12. ASSEMBLY IS ROHS COMPLIANT.

TOLERANCES			
MM	TOL	INCH	TOL
0-6	±0.25	0-.24	±.010
>6-30	±0.40	.24-1.18	±.016
>30-120	±0.50	1.18-4.76	±.020
>120	±0.80	>4.76	±.031

DOCUMENT STATUS	P1	RELEASE DATE	2019/07/08 15:51:17

FORMAT: Eng-legal-prod-prod-B
REVISION: D
DATE: 2018/01/18

SYMBOLS
▽ = 0
▽ = 0
▽ = 0
▽ = 0
▼ = 0
▽ = 0
☒ = 0
■ = 0
▽ = 0

THIS DRAWING CONTAINS INFORMATION THAT IS PROPRIETARY TO MOLEX ELECTRONIC TECHNOLOGIES, LLC AND SHOULD NOT BE USED WITHOUT WRITTEN PERMISSION

DIMENSION UNITS: MM/INCH
SCALE: 4:1

GENERAL TOLERANCES (UNLESS SPECIFIED)

	MM	INCH
4 PLACES	±	±
3 PLACES	±	± SEE CHART
2 PLACES	± SEE CHART	± SEE CHART
1 PLACE	± SEE CHART	±
0 PLACES	±	±
ANGULAR TOL	± °	

DRAFT WHERE APPLICABLE MUST REMAIN WITHIN DIMENSIONS

CURRENT REV DESC: MIGRATION TO ECTR/NX

EC NO: 619931
DRWN: DSOPPIN 2019/06/24
CHK'D: DACHAMMER 2019/07/01
APPR: JFMURPHY 2019/07/08

INITIAL REVISION:
DRWN: LROTHAUS 2005/06/12
APPR: C.YORK 2006/10/01

THIRD ANGLE PROJECTION | DRAWING: B-SIZE | SERIES: 39544

molex

5.08MM, EURO TERM BLOCK
VERTICAL, PC MOUNT STAMPED TERMINAL

PRODUCT CUSTOMER DRAWING

DOCUMENT NUMBER	DOC TYPE	DOC PART	REVISION
SD-39544-001	PSD	001	B2

MATERIAL NUMBER	CUSTOMER	SHEET NUMBER
SEE SHEET 2	GENERAL MARKET	1 OF 2

DESCRIPTION	CIRCUIT SIZE	MATERIAL NUMBERS						DIMENSIONAL INFORMATION			
		BLACK			GREEN						
		100% TIN			100% TIN						
		PRINTING OPTIONS			PRINTING OPTIONS			DIM. "A"		DIM. "B"	
		None	10AV	11AV	None	10AV	11AV	mm	inch	mm	inch
5.08 MM, EURO BLOCK, PC MOUNT, VERTICAL	2	395443002	395445002	395447002	395943002	395945002	395947002	10.16	.400	5.08	.200
5.08 MM, EURO BLOCK, PC MOUNT, VERTICAL	3	395443003	395445003	395447003	395943003	395945003	395947003	15.24	.600	10.16	.400
5.08 MM, EURO BLOCK, PC MOUNT, VERTICAL	4	395443004	395445004	395447004	395943004	395945004	395947004	20.32	.800	15.24	.600
5.08 MM, EURO BLOCK, PC MOUNT, VERTICAL	5	395443005	395445005	395447005	395943005	395945005	395947005	25.40	1.000	20.32	.800
5.08 MM, EURO BLOCK, PC MOUNT, VERTICAL	6	395443006	395445006	395447006	395943006	395945006	395947006	30.48	1.200	25.40	1.000
5.08 MM, EURO BLOCK, PC MOUNT, VERTICAL	7	395443007	395445007	395447007	395943007	395945007	395947007	35.56	1.400	30.48	1.200
5.08 MM, EURO BLOCK, PC MOUNT, VERTICAL	8	395443008	395445008	395447008	395943008	395945008	395947008	40.64	1.600	35.56	1.400
5.08 MM, EURO BLOCK, PC MOUNT, VERTICAL	9	395443009	395445009	395447009	395943009	395945009	395947009	45.72	1.800	40.64	1.600
5.08 MM, EURO BLOCK, PC MOUNT, VERTICAL	10	395443010	395445010	395447010	395943010	395945010	395947010	50.80	2.000	45.72	1.800
5.08 MM, EURO BLOCK, PC MOUNT, VERTICAL	11	395443011	395445011	395447011	395943011	395945011	395947011	55.88	2.200	50.80	2.000
5.08 MM, EURO BLOCK, PC MOUNT, VERTICAL	12	395443012	395445012	395447012	395943012	395945012	395947012	60.96	2.400	55.88	2.200
5.08 MM, EURO BLOCK, PC MOUNT, VERTICAL	13	395443013	395445013	395447013	395943013	395945013	395947013	66.04	2.600	60.96	2.400
5.08 MM, EURO BLOCK, PC MOUNT, VERTICAL	14	395443014	395445014	395447014	395943014	395945014	395947014	71.12	2.800	66.04	2.600
5.08 MM, EURO BLOCK, PC MOUNT, VERTICAL	15	395443015	395445015	395447015	395943015	395945015	395947015	76.20	3.000	71.12	2.800
5.08 MM, EURO BLOCK, PC MOUNT, VERTICAL	16	395443016	395445016	395447016	395943016	395945016	395947016	81.28	3.200	76.20	3.000
5.08 MM, EURO BLOCK, PC MOUNT, VERTICAL	17	395443017	395445017	395447017	395943017	395945017	395947017	86.36	3.400	81.28	3.200
5.08 MM, EURO BLOCK, PC MOUNT, VERTICAL	18	395443018	395445018	395447018	395943018	395945018	395947018	91.44	3.600	86.36	3.400
5.08 MM, EURO BLOCK, PC MOUNT, VERTICAL	19	395443019	395445019	395447019	395943019	395945019	395947019	96.52	3.800	91.44	3.600
5.08 MM, EURO BLOCK, PC MOUNT, VERTICAL	20	395443020	395445020	395447020	395943020	395945020	395947020	101.60	4.000	96.52	3.800
5.08 MM, EURO BLOCK, PC MOUNT, VERTICAL	21	395443021	395445021	395447021	395943021	395945021	395947021	106.68	4.200	101.60	4.000
5.08 MM, EURO BLOCK, PC MOUNT, VERTICAL	22	395443022	395445022	395447022	395943022	395945022	395947022	111.76	4.400	106.68	4.200
5.08 MM, EURO BLOCK, PC MOUNT, VERTICAL	23	395443023	395445023	395447023	395943023	395945023	395947023	116.84	4.600	111.76	4.400
5.08 MM, EURO BLOCK, PC MOUNT, VERTICAL	24	395443024	395445024	395447024	395943024	395945024	395947024	121.92	4.800	116.84	4.600

TOLERANCES			
MM	TOL	INCH	TOL
0-6	±0.25	0-.24	±.010
>6-30	±0.40	.24-1.18	±.016
>30-120	±0.50	1.18-4.76	±.020
>120	±0.80	>4.76	±.031

SYMBOLS

= 0
= 0
= 0
= 0
= 0
= 0
= 0
= 0
= 0

THIS DRAWING CONTAINS INFORMATION THAT IS PROPRIETARY TO MOLEX ELECTRONIC TECHNOLOGIES, LLC AND SHOULD NOT BE USED WITHOUT WRITTEN PERMISSION

DIMENSION UNITS: MM/INCH | SCALE: 2:1

GENERAL TOLERANCES (UNLESS SPECIFIED)

	MM	INCH
4 PLACES	±	±
3 PLACES	±	± SEE CHART
2 PLACES	± SEE CHART	± SEE CHART
1 PLACE	± SEE CHART	±
0 PLACES	±	±
ANGULAR TOL	± °	

DRAFT WHERE APPLICABLE MUST REMAIN WITHIN DIMENSIONS

CURRENT REV DESC: MIGRATION TO ECTR/NX

EC NO: 619931
DRWN: DSOPPIN 2019/06/24
CHK'D: DACHAMMER 2019/07/01
APPR: JFMURPHY 2019/07/08

INITIAL REVISION:
DRWN: LROTHAUS 2005/06/12
APPR: C.YORK 2006/06/01

THIRD ANGLE PROJECTION | DRAWING: B-SIZE | SERIES: 39544

molex

5.08MM, EURO TERM BLOCK
VERTICAL, PC MOUNT STAMPED TERMINAL

PRODUCT CUSTOMER DRAWING

DOCUMENT NUMBER	DOC TYPE	DOC PART	REVISION
SD-39544-001	PSD	001	B2

MATERIAL NUMBER	CUSTOMER	SHEET NUMBER
SEE TABLE	GENERAL MARKET	2 OF 2

DOCUMENT STATUS	P1	RELEASE DATE	2019/07/08 15:51:17

FORMAT: Eng-lega-master-tb-prod-B
REVISION: D
DATE: 2018/01/18