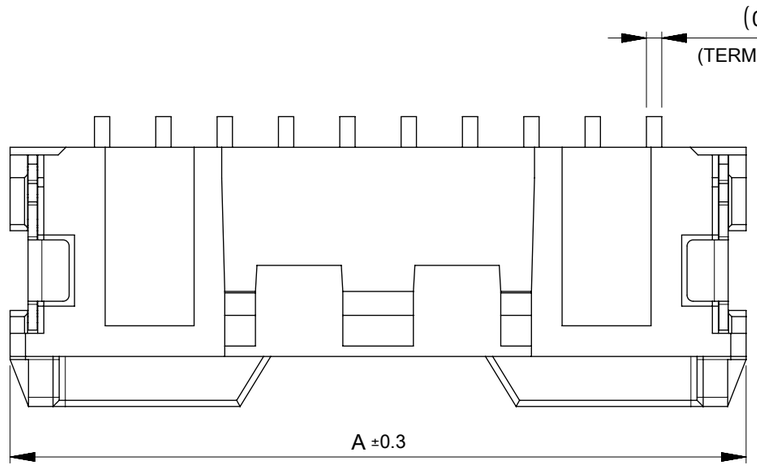


NOTES

1. 材質及び仕上げ(めっき仕様) : TABLE 1, TABLE 2 参照
   MATERIAL AND FINISHES (PLATING SPECIFICATION) : SEE TABLE 1 AND TABLE 2
2. 適合嵌合相手 : 505570シリーズ
   MATE WITH : 505570 SERIES
3. 端子テール部及びネイルの平坦度 : 0.1mm以下
   TAIL AND NAIL COPLANARITY TO BE 0.1mm MAXIMUM.
4. 偶数極に適用
   APPLY TO EVEN CIRCUIT
5. 製品仕様書 : 5055700001-PS PS 000
   PRODUCT SPECIFICATION : 5055700001-PS PS 000
6. コネクタ取扱説明書 : 5055700001 PS A03
   APPLICATION SPECIFICATION : 5055700001 PS A03
7. 本製品は錫めっき品である。
   金めっき品は5055780002-SD PSD 000をご参照下さい。
   THIS IS TIN PLATING PRODUCT.
   PLEASE REFER TO 5055780002-SD PSD 000 FOR GOLD PLATING PRODUCT.
8. 発注番号
   ORDER NUMBER

505578**7*

極数
CIRCUIT SIZE

| 番号 NO. | ハウジングカラー HOUSING COLOR |
|---|---|
| 0 | ナチュラル(白) NATURAL(WHITE) |
| 1 | 黒 BLACK |

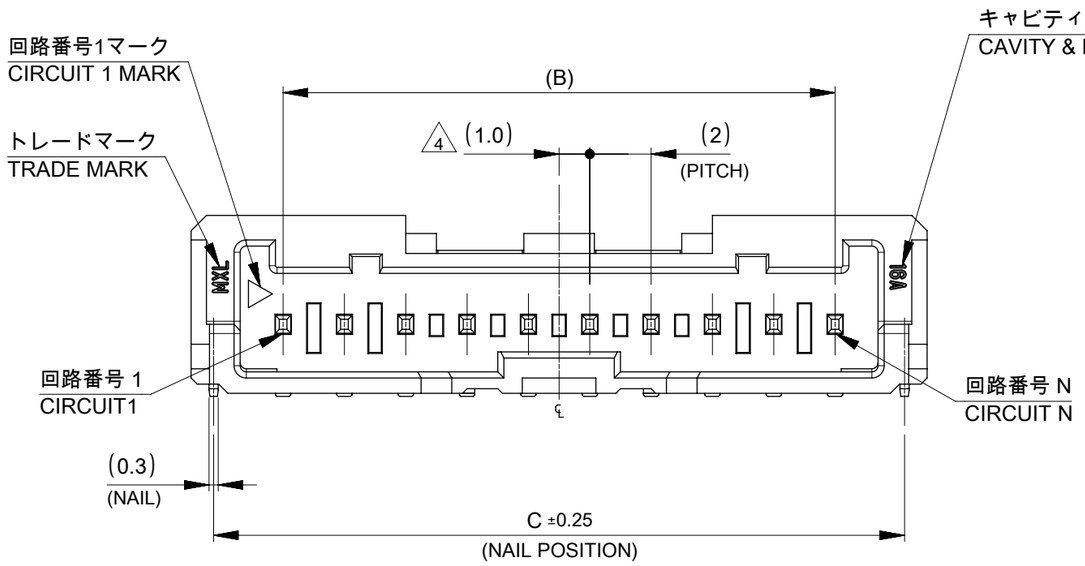


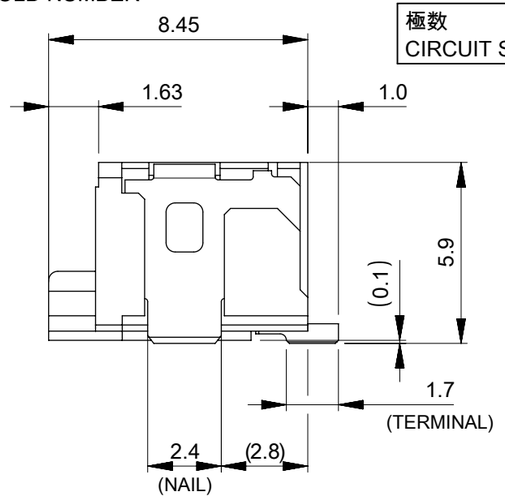


| | | | BLACK | NATURAL(WHITE) | HOUSING COLOR |
|---|---|---|---|---|---|
| 34.53 | 30 | 36 | 5055781671 | 5055781670 | 16 |
| 32.53 | 28 | 34 | 5055781571 | 5055781570 | 15 |
| 30.53 | 26 | 32 | 5055781471 | 5055781470 | 14 |
| 28.53 | 24 | 30 | 5055781371 | 5055781370 | 13 |
| 26.53 | 22 | 28 | 5055781271 | 5055781270 | 12 |
| 24.53 | 20 | 26 | 5055781171 | 5055781170 | 11 |
| 22.53 | 18 | 24 | 5055781071 | 5055781070 | 10 |
| 20.53 | 16 | 22 | 5055780971 | 5055780970 | 9 |
| 18.53 | 14 | 20 | 5055780871 | 5055780870 | 8 |
| 16.53 | 12 | 18 | 5055780771 | 5055780770 | 7 |
| 14.53 | 10 | 16 | 5055780671 | 5055780670 | 6 |
| 12.53 | 8 | 14 | 5055780571 | 5055780570 | 5 |
| 10.53 | 6 | 12 | 5055780471 | 5055780470 | 4 |
| 8.53 | 4 | 10 | 5055780371 | 5055780370 | 3 |
| 6.53 | 2 | 8 | 5055780271 | 5055780270 | 2 |
| C | B | A | 8 発注番号 ORDER NUMBER | | 極数 CIRCUIT SIZE |
| | | | エンボステープ梱包 PACKAGING STYLE : EMBOSSED TAPE AND REEL | | |

1 TABLE 1

| 番号 NO. | 部品 PART | 材質 MATERIAL |
|---|---|---|
| ① | ハウジング HOUSING | ポリアミド(PA), UL94 V-0, 色 : 注記8参照<br>POLYAMIDE(PA), UL94 V-0, COLOR: SEE NOTE 8 |
| ② | ターミナル TERMINAL | 黄銅<br>BRASS |
| | | 錫めっき : 1.0 MICROMETER MINIMUM<br>MATTE TIN PLATING |
| | | ニッケルめっき (下地めっき) : 1.0 MICROMETER MINIMUM<br>NICKEL PLATING (UNDER PLATING) |
| ③ | ネイル NAIL | リン青銅<br>PHOSPHOR BRONZE |
| | | 錫めっき : 1.0 MICROMETER MINIMUM<br>MATTE TIN PLATING |
| | | ニッケルめっき (下地めっき) : 1.0 MICROMETER MINIMUM<br>NICKEL PLATING (UNDER PLATING) |

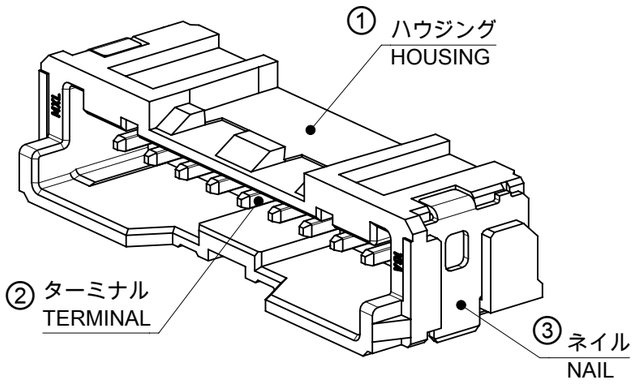


THIS DRAWING CONTAINS INFORMATION THAT IS PROPRIETARY TO MOLEX ELECTRONIC TECHNOLOGIES, LLC AND SHOULD NOT BE USED WITHOUT WRITTEN PERMISSION

| | |
|---|---|
| DIMENSION UNITS | mm |
| SCALE | NTS |
| GENERAL TOLERANCES (UNLESS SPECIFIED) | |
| ANGULAR TOL | ± 3.0 ° |
| 4 PLACES | ± 0.2 |
| 3 PLACES | ± 0.2 |
| 2 PLACES | ± 0.2 |
| 1 PLACE | ± 0.2 |
| 0 PLACES | ± 0.2 |
| DRAFT WHERE APPLICABLE MUST REMAIN WITHIN DIMENSIONS | |

CURRENT REV DESC:

EC NO: 718854
DRWN: SOKUMURA01 2023/02/28
CHK'D: SAKIYAMA 2023/08/04
APPR: MARAI 2023/08/04

INITIAL REVISION:
DRWN: TENAGASE 2016/05/12
APPR: TKANEKO 2016/06/23

THIRD ANGLE PROJECTION | DRAWING: A3-SIZE | SERIES: 505578

molex

MICRO-LOCK PLUS 2.0 W/B
SINGLE ROW RIGHT ANGLE SMT PLUG ASSEMBLY
TIN PLATING

PRODUCT CUSTOMER DRAWING

| DOCUMENT NUMBER | DOC TYPE | DOC PART | REVISION |
|---|---|---|---|
| 5055780001 | PSD | 000 | C |

| MATERIAL NUMBER | CUSTOMER | SHEET NUMBER |
|---|---|---|
| SEE CHART | GENERAL | 1 OF 4 |

| DOCUMENT STATUS | P1 | RELEASE DATE | 2023/08/04 04:04:00 |
|---|---|---|---|

FORMAT: master_B-size-A3
REVISION: J1
DATE: 2021/05/07

## 製品形状
## PRODUCT SHAPE

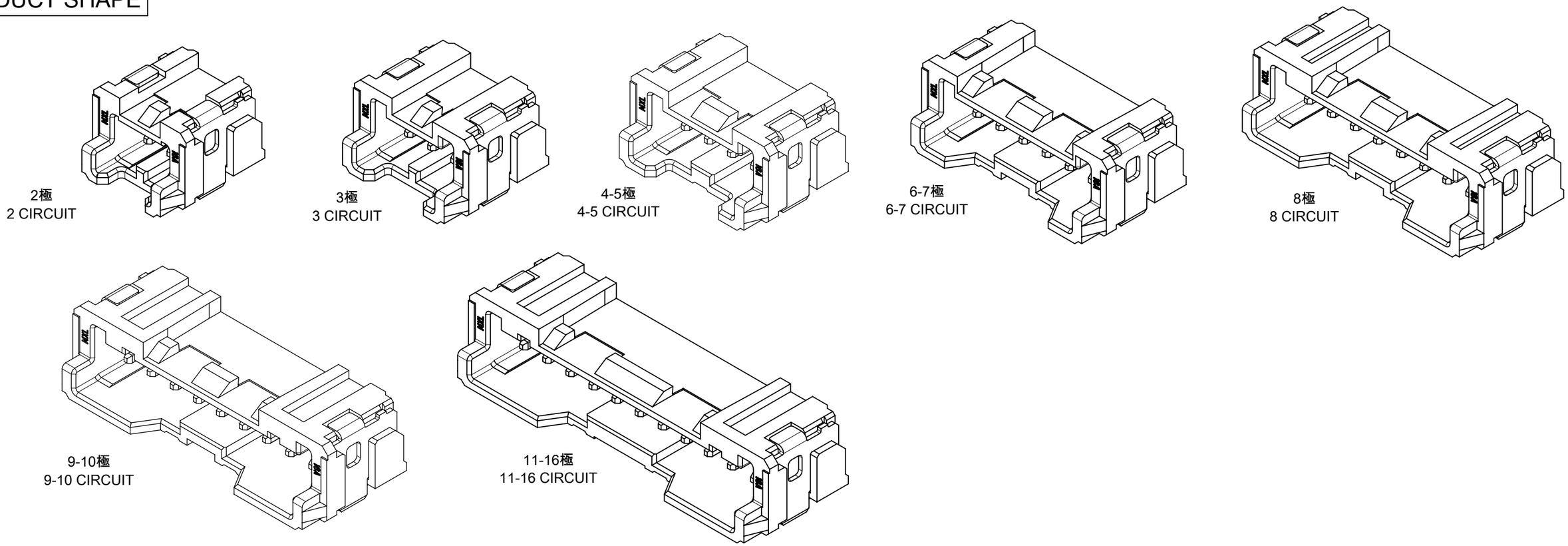


## 基板パターンレイアウト
## PCB PATTERN LAYOUT

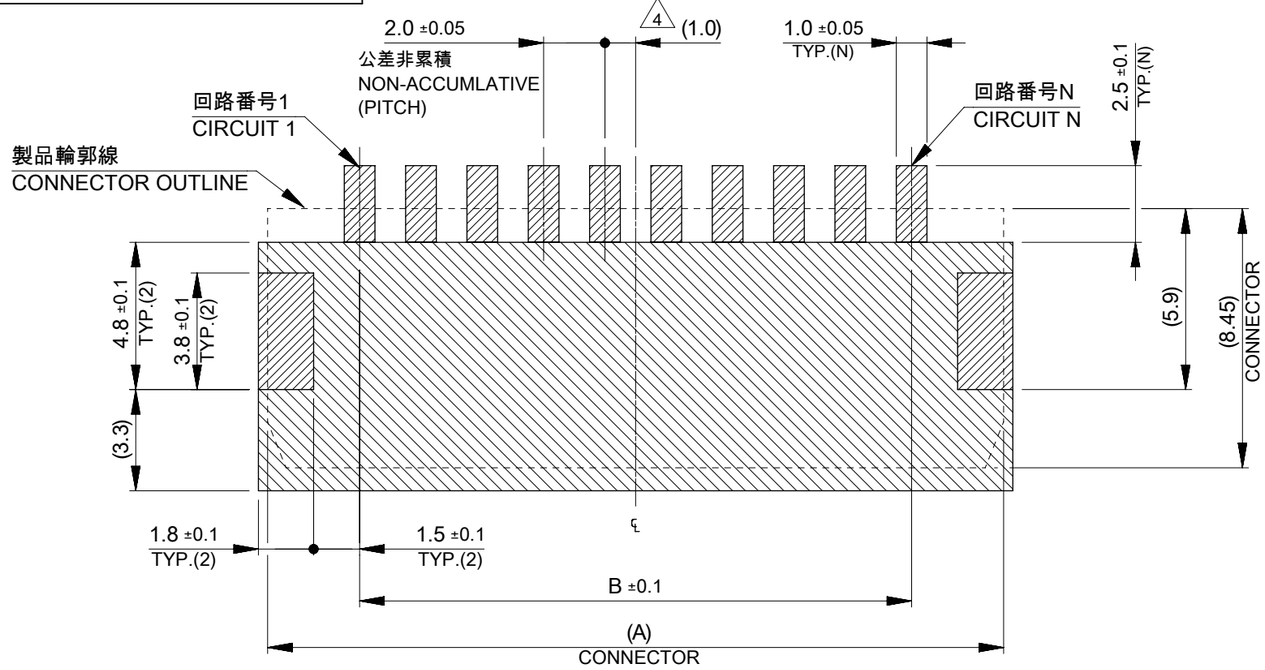


基板パターンレイアウト(参考)
(参考：基板厚1.6mm, メタルマスク厚み0.15mm, マスク開口率100%)
PCB PATTERN LAYOUT (REFERENCE)
(REFERENCE: PCB THICKNESS 1.6mm, STENCIL THICKNESS 0.15mm, APERTURE RATIO 100%)

パターン非推奨エリア
パターンを引き回す際には製品機能に影響がないことを御確認ください。
PATTERN IS NOT RECOMMENDED ON THE HATCHING AREA.
PLEASE CHECK NOT TO HAVE PROBLEM FOR PRODUCT FUNCTION
WHEN SETTING PATTERN ON THE HATCHING AREA.

THIS DRAWING CONTAINS INFORMATION THAT IS PROPRIETARY TO MOLEX ELECTRONIC TECHNOLOGIES, LLC AND SHOULD NOT BE USED WITHOUT WRITTEN PERMISSION

| DIMENSION UNITS | SCALE |
|---|---|
| mm | NTS |

GENERAL TOLERANCES (UNLESS SPECIFIED)

| | | |
|---|---|---|
| ANGULAR TOL | ± | 3.0 ° |
| 4 PLACES | ± | 0.2 |
| 3 PLACES | ± | 0.2 |
| 2 PLACES | ± | 0.2 |
| 1 PLACE | ± | 0.2 |
| 0 PLACES | ± | 0.2 |

DRAFT WHERE APPLICABLE MUST REMAIN WITHIN DIMENSIONS

CURRENT REV DESC:

EC NO: 718854
DRWN: SOKUMURA01 2023/02/28
CHK'D: SAKIYAMA 2023/08/04
APPR: MARAI 2023/08/04

INITIAL REVISION:
DRWN: TENAGASE 2016/05/12
APPR: TKANEKO 2016/06/23

THIRD ANGLE PROJECTION

| DRAWING | SERIES |
|---|---|
| A3-SIZE | 505578 |

molex

MICRO-LOCK PLUS 2.0 W/B
SINGLE ROW RIGHT ANGLE SMT PLUG ASSEMBLY
TIN PLATING

PRODUCT CUSTOMER DRAWING

| DOCUMENT NUMBER | DOC TYPE | DOC PART | REVISION |
|---|---|---|---|
| 5055780001 | PSD | 000 | C |

| MATERIAL NUMBER | CUSTOMER | SHEET NUMBER |
|---|---|---|
| SEE SHEET 1 | GENERAL | 2 OF 4 |

| DOCUMENT STATUS | P1 | RELEASE DATE | 2023/08/04 | 04:04:00 |
|---|---|---|---|---|

FORMAT: master-tb-mod-A3
REVISION: J1
DATE: 2021/05/01

## 吸着エリア
## SUCTION AREA

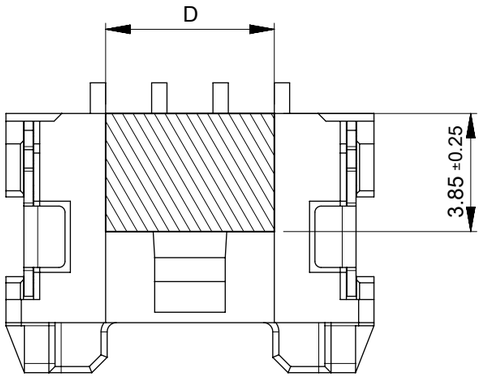


2-5CKT

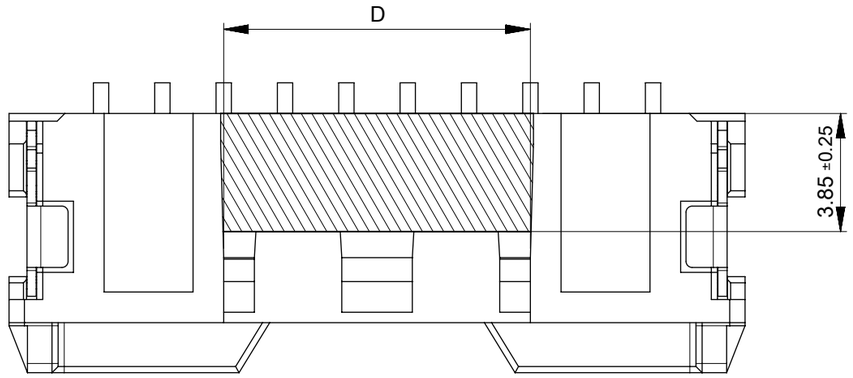


6-16CKT

## 嵌合状態図
## MATED CONNECTORS

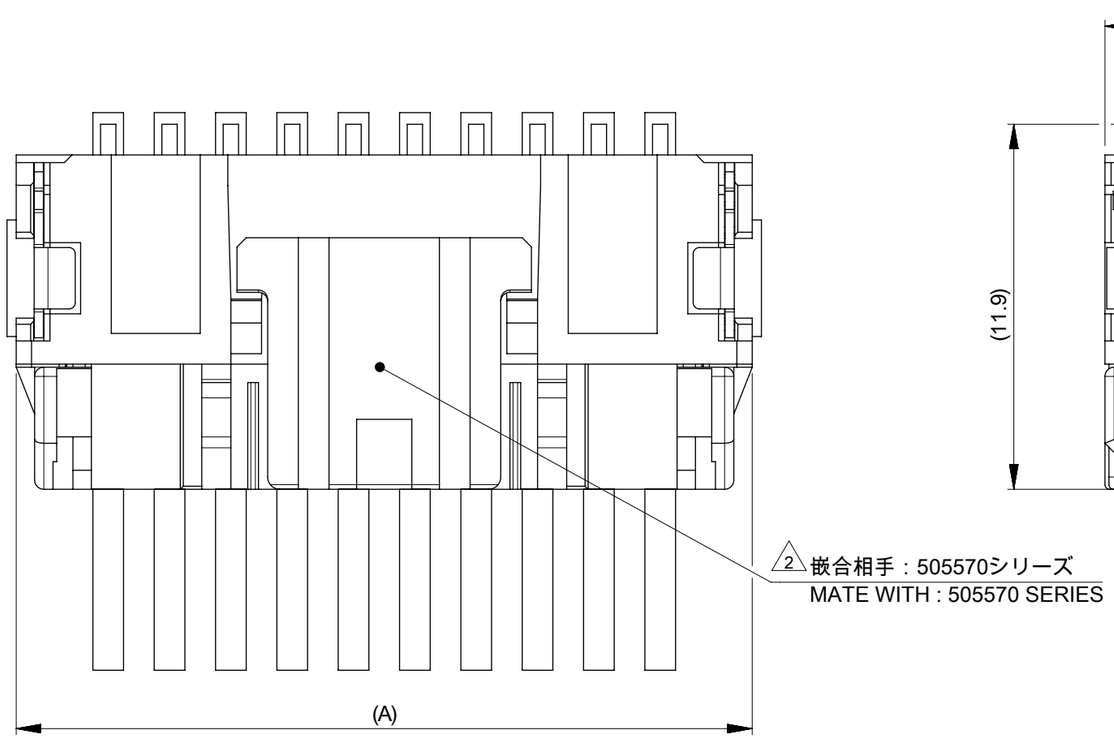


| D | 極数 CIRCUIT SIZE |
|---|---|
| 14 | 16 |
| | 15 |
| | 14 |
| | 13 |
| | 12 |
| | 11 |
| 10 | 10 |
| | 9 |
| | 8 |
| | 7 |
| | 6 |
| 5.5 | 5 |
| | 4 |
| 3.5 | 3 |
| | 2 |

THIS DRAWING CONTAINS INFORMATION THAT IS PROPRIETARY TO MOLEX ELECTRONIC TECHNOLOGIES, LLC AND SHOULD NOT BE USED WITHOUT WRITTEN PERMISSION

| DIMENSION UNITS | SCALE |
|---|---|
| mm | NTS |

GENERAL TOLERANCES (UNLESS SPECIFIED)

| | | |
|---|---|---|
| ANGULAR TOL | ± | 3.0 ° |
| 4 PLACES | ± | 0.2 |
| 3 PLACES | ± | 0.2 |
| 2 PLACES | ± | 0.2 |
| 1 PLACE | ± | 0.2 |
| 0 PLACES | ± | 0.2 |

DRAFT WHERE APPLICABLE MUST REMAIN WITHIN DIMENSIONS

CURRENT REV DESC:

EC NO: 718854
DRWN: SOKUMURA01 2023/02/28
CHK'D: SAKIYAMA 2023/08/04
APPR: MARAI 2023/08/04

INITIAL REVISION:
DRWN: TENAGASE 2016/05/12
APPR: TKANEKO 2016/06/23

molex

MICRO-LOCK PLUS 2.0 W/B
SINGLE ROW RIGHT ANGLE SMT PLUG ASSEMBLY
TIN PLATING

PRODUCT CUSTOMER DRAWING

| DOCUMENT NUMBER | DOC TYPE | DOC PART | REVISION |
|---|---|---|---|
| 5055780001 | PSD | 000 | C |

| THIRD ANGLE PROJECTION | DRAWING | SERIES | MATERIAL NUMBER | CUSTOMER | SHEET NUMBER |
|---|---|---|---|---|---|
| | A3-SIZE | 505578 | SEE SHEET 1 | GENERAL | 3 OF 4 |

| DOCUMENT STATUS | P1 | RELEASE DATE | 2023/08/04 04:04:00 |
|---|---|---|---|

FORMAT: master_format-A3
REVISION: J1
DATE: 2021/05/07

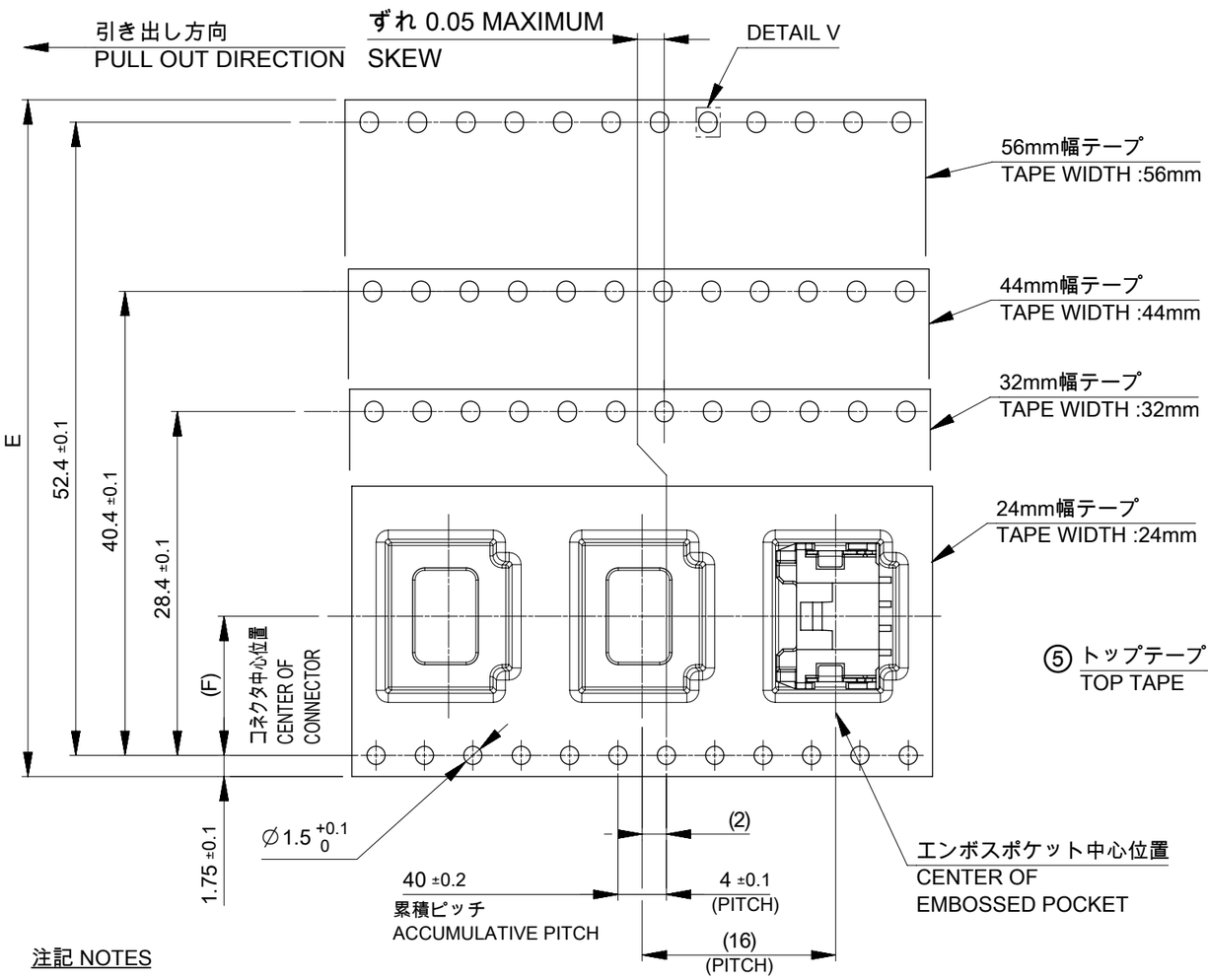


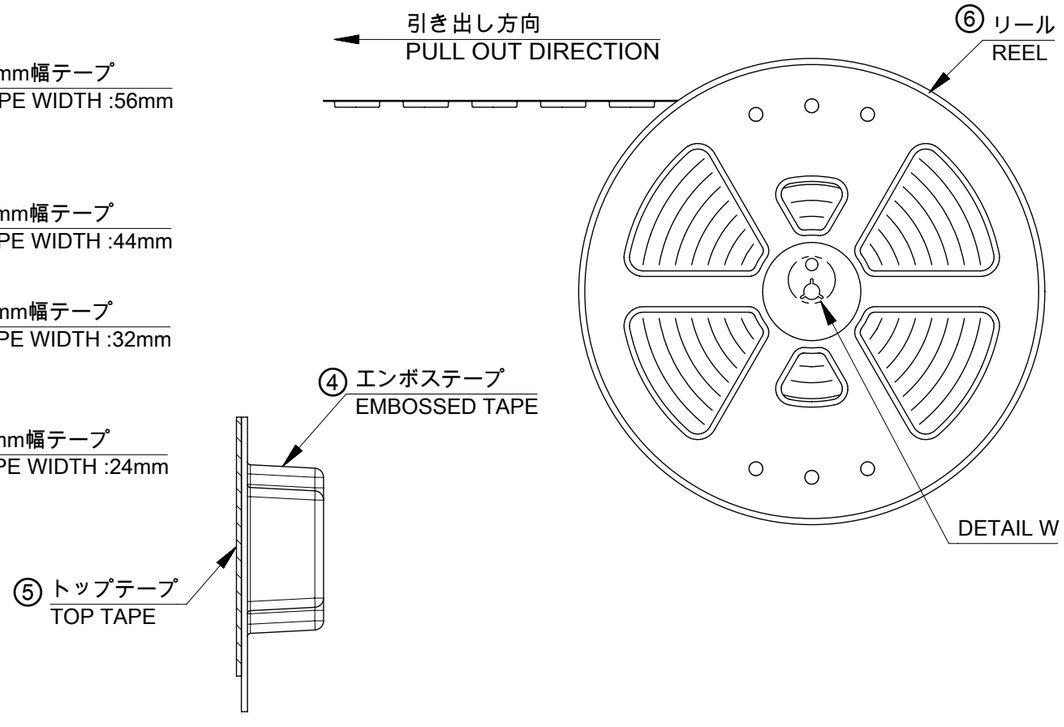


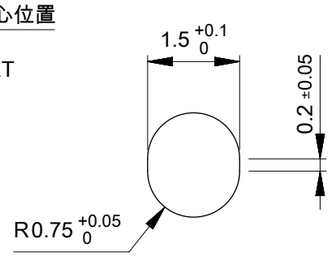


DETAIL V

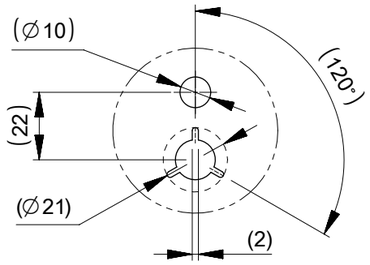


DETAIL W

注記 NOTES

9. 梱包数量：900個
   NUMBER OF CONNECTORS : 900 PIECES/REEL
10. 梱包仕様書：5055789200 PS 200
    PACKING SPECIFICATION : 5055789200 PS 200
11. リードテープ長さ
    LEAD TAPE LENGTH

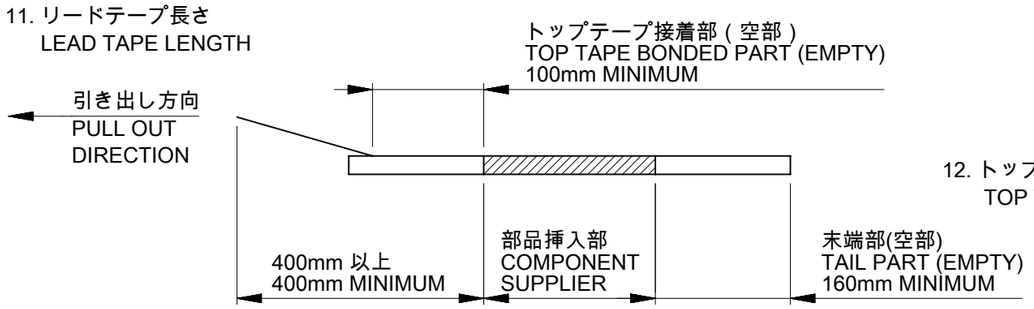


12. トップテープの剥離強度については、IEC 60286-3に準拠
    TOP TAPE PEEL FORCE IS DEFINED BY IEC 60286-3.

| H | G | F | E | 極数 CIRCUIT SIZE |
|---|---|---|---|---|
| 61.4 | 57.4 | 26.2 | 56±0.3 | 16 |
| | | | | 15 |
| | | | | 14 |
| 49.4 | 45.4 | 20.2 | 44±0.3 | 13 |
| | | | | 12 |
| | | | | 11 |
| | | | | 10 |
| | | | | 9 |
| | | | | 8 |
| 37.4 | 33.4 | 14.2 | 32±0.3 | 7 |
| | | | | 6 |
| 29.4 | 25.4 | 11.5 | 24 +0.3 -0.1 | 5 |
| | | | | 4 |
| | | | | 3 |
| | | | | 2 |

⚠1 TABLE 2

| 番号 NO. | 部品 PART | 材質 MATERIAL |
|---|---|---|
| ④ | エンボステープ EMBOSSED TAPE | ポリスチレン(PS) POLYSTYRENE(PS) |
| ⑤ | トップテープ TOP TAPE | ポリエチレン(PE), その他 POLYETHYLENE(PE), OTHER |
| ⑥ | リール REEL | ポリスチレン(PS), [リサイクル材を含む] POLYSTYRENE(PS) [RECYCLE MATERIAL CONTAINED] |

THIS DRAWING CONTAINS INFORMATION THAT IS PROPRIETARY TO MOLEX ELECTRONIC TECHNOLOGIES, LLC AND SHOULD NOT BE USED WITHOUT WRITTEN PERMISSION

| DIMENSION UNITS | SCALE |
|---|---|
| mm | NTS |

GENERAL TOLERANCES (UNLESS SPECIFIED)

| | | |
|---|---|---|
| ANGULAR TOL | ± | 3.0 ° |
| 4 PLACES | ± | 0.2 |
| 3 PLACES | ± | 0.2 |
| 2 PLACES | ± | 0.2 |
| 1 PLACE | ± | 0.2 |
| 0 PLACES | ± | 0.2 |

DRAFT WHERE APPLICABLE MUST REMAIN WITHIN DIMENSIONS

CURRENT REV DESC:

EC NO: 718854
DRWN: SOKUMURA01 2023/02/28
CHK'D: SAKIYAMA 2023/08/04
APPR: MARAI 2023/08/04

INITIAL REVISION:
DRWN: TENAGASE 2016/05/12
APPR: TKANEKO 2016/06/23

THIRD ANGLE PROJECTION | DRAWING: A3-SIZE | SERIES: 505578

molex

MICRO-LOCK PLUS 2.0 W/B
SINGLE ROW RIGHT ANGLE SMT PLUG ASSEMBLY
TIN PLATING

PRODUCT CUSTOMER DRAWING

| DOCUMENT NUMBER | DOC TYPE | DOC PART | REVISION |
|---|---|---|---|
| 5055780001 | PSD | 000 | C |

| MATERIAL NUMBER | CUSTOMER | SHEET NUMBER |
|---|---|---|
| SEE SHEET 1 | GENERAL | 4 OF 4 |

| DOCUMENT STATUS | P1 | RELEASE DATE | 2023/08/04 04:04:00 |
|---|---|---|---|

FORMAT: master_mod-A3
REVISION: J1
DATE: 2021/05/07