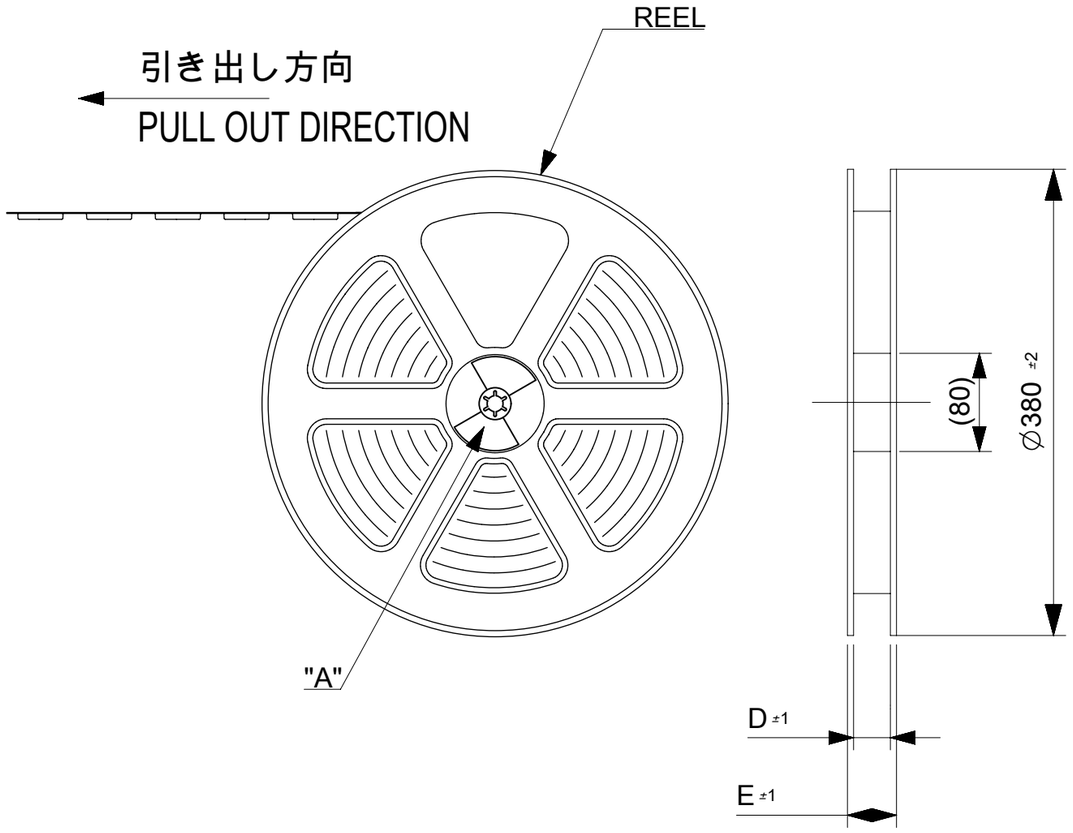

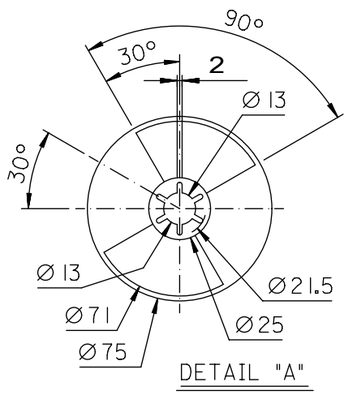

REFERENCE

NOTES

1. 梱包数量： 1200個 / リール
   NUMBER OF CONNECTORS : 1200 PCS/REEL.
2. リードテープ長さ
   LEAD TAPE LENGTH

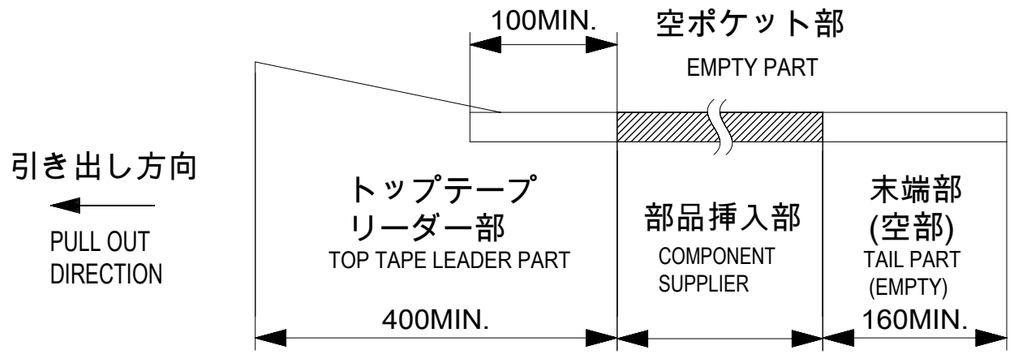

3. カバーテープの剥離強度については、IEC60286-3に準拠。
   TOP TAPE PEEL FORCE IS DEFINED BY IEC 60286-3.
4. 製品詳細寸法については、図面　2004851700を参照下さい。
   FOR DIMENTIONS OF PRODUCT, REFER TO 2004851700
5. 材料　MATERIAL
   キャリアテープ　：　ポリスチレン
   CARRIER TAPE : POLYSTYRENE
   トップテープ　：　ポリエチレンテレフタレート、ポリエチレン
   TOP TAPE : POLYETHYLENE TEREHTHALATE, POLYETHYLENE
   リール　:ポリスチレン＜リサイクル材を含む＞
   REEL : POLYSTYRENE RECYCLED MATERIAL CONTAINED
6. ELV及びRoHS適合品　ELV AND RoHS COMPLIANT.

THIS DRAWING CONTAINS INFORMATION THAT IS PROPRIETARY TO MOLEX ELECTRONIC TECHNOLOGIES, LLC AND SHOULD NOT BE USED WITHOUT WRITTEN PERMISSION

DIMENSION UNITS	SCALE
mm	NTS

GENERAL TOLERANCES (UNLESS SPECIFIED)	
ANGULAR TOL	± 1.0 °
4 PLACES	± 0.1
3 PLACES	± 0.1
2 PLACES	± 0.1
1 PLACE	± 0.1
0 PLACES	± 0.1

DRAFT WHERE APPLICABLE MUST REMAIN WITHIN DIMENSIONS

CURRENT REV DESC:

EC NO: 648126
DRWN: TYAMANE 2020/10/15
CHK'D: YMATSUMOTO 2020/10/30
APPR: SHOSHIKAWA 2020/11/02

INITIAL REVISION:
DRWN: TYAMANE 2018/10/03
APPR: SHOSHIKAWA 2020/06/08

THIRD ANGLE PROJECTION | DRAWING: A3-SIZE | SERIES: 200485

molex

EMB PKG ONE-TOUCH ST GND

PRODUCT CUSTOMER DRAWING

DOCUMENT NUMBER	DOC TYPE	DOC PART	REVISION
2004850700	PSD	000	B

MATERIAL NUMBER	CUSTOMER	SHEET NUMBER
SEE TABLE	GENERAL	1 OF 3

DOCUMENT STATUS	P1	RELEASE DATE	2020/11/02 06:52:25

FORMAT: master-lb-prod-A3
REVISION: J
DATE: 2020/01/14

引き出し方向
PULL OUT
DIRECTION

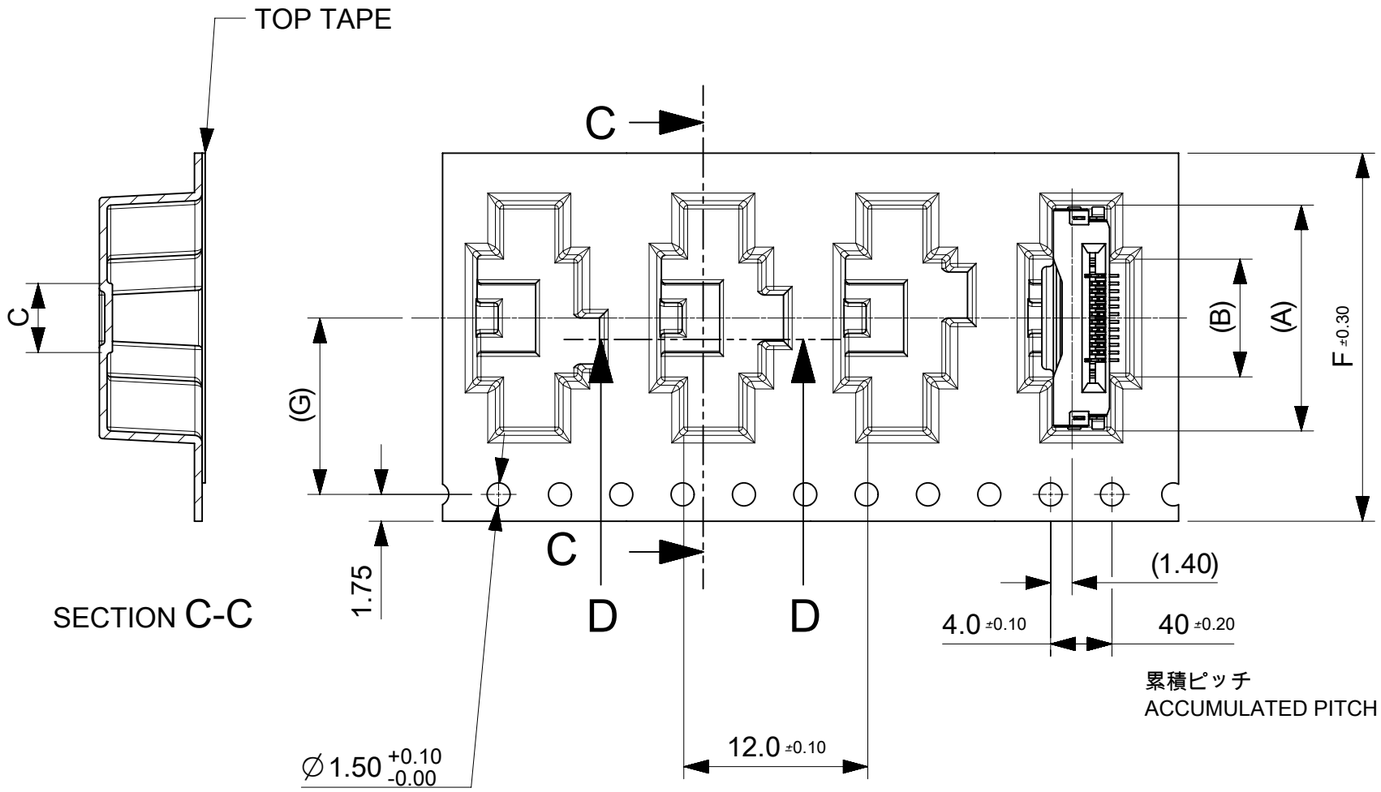

SECTION C-C

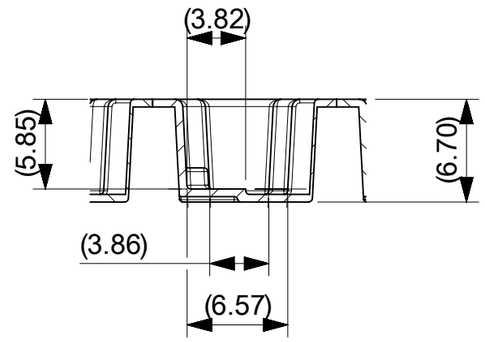

SECTION D-D

CONNECTOR NO. 20048517**

11.5	24	29.4	25.4	4.5	7.65	14.7	2004850710	10
G	F	E	D	C	B	A	EMBOSSED PACKAGE	Ckt
							オーダー番号 ORDER NO.	

THIS DRAWING CONTAINS INFORMATION THAT IS PROPRIETARY TO MOLEX ELECTRONIC TECHNOLOGIES, LLC AND SHOULD NOT BE USED WITHOUT WRITTEN PERMISSION

DIMENSION UNITS	SCALE
mm	NTS

GENERAL TOLERANCES (UNLESS SPECIFIED)

ANGULAR TOL	±	1.0 °
4 PLACES	±	0.1
3 PLACES	±	0.1
2 PLACES	±	0.1
1 PLACE	±	0.1
0 PLACES	±	0.1

DRAFT WHERE APPLICABLE MUST REMAIN WITHIN DIMENSIONS

CURRENT REV DESC:

EC NO: 648126
DRWN: TYAMANE 2020/10/15
CHK'D: YMATSUMOTO 2020/10/30
APPR: SHOSHIKAWA 2020/11/02

INITIAL REVISION:
DRWN: TYAMANE 2018/10/03
APPR: SHOSHIKAWA 2020/06/08

molex

EMB PKG ONE-TOUCH ST GND

PRODUCT CUSTOMER DRAWING

DOCUMENT NUMBER	DOC TYPE	DOC PART	REVISION
2004850700	PSD	000	B

THIRD ANGLE PROJECTION	DRAWING	SERIES	MATERIAL NUMBER	CUSTOMER	SHEET NUMBER
	A3-SIZE	200485	SEE TABLE	GENERAL	2 OF 3

DOCUMENT STATUS	P1	RELEASE DATE	2020/11/02 06:52:25

FORMAT: master-tb-prod-A3
REVISION: J
DATE: 2020/01/14

引き出し方向
PULL OUT
DIRECTION

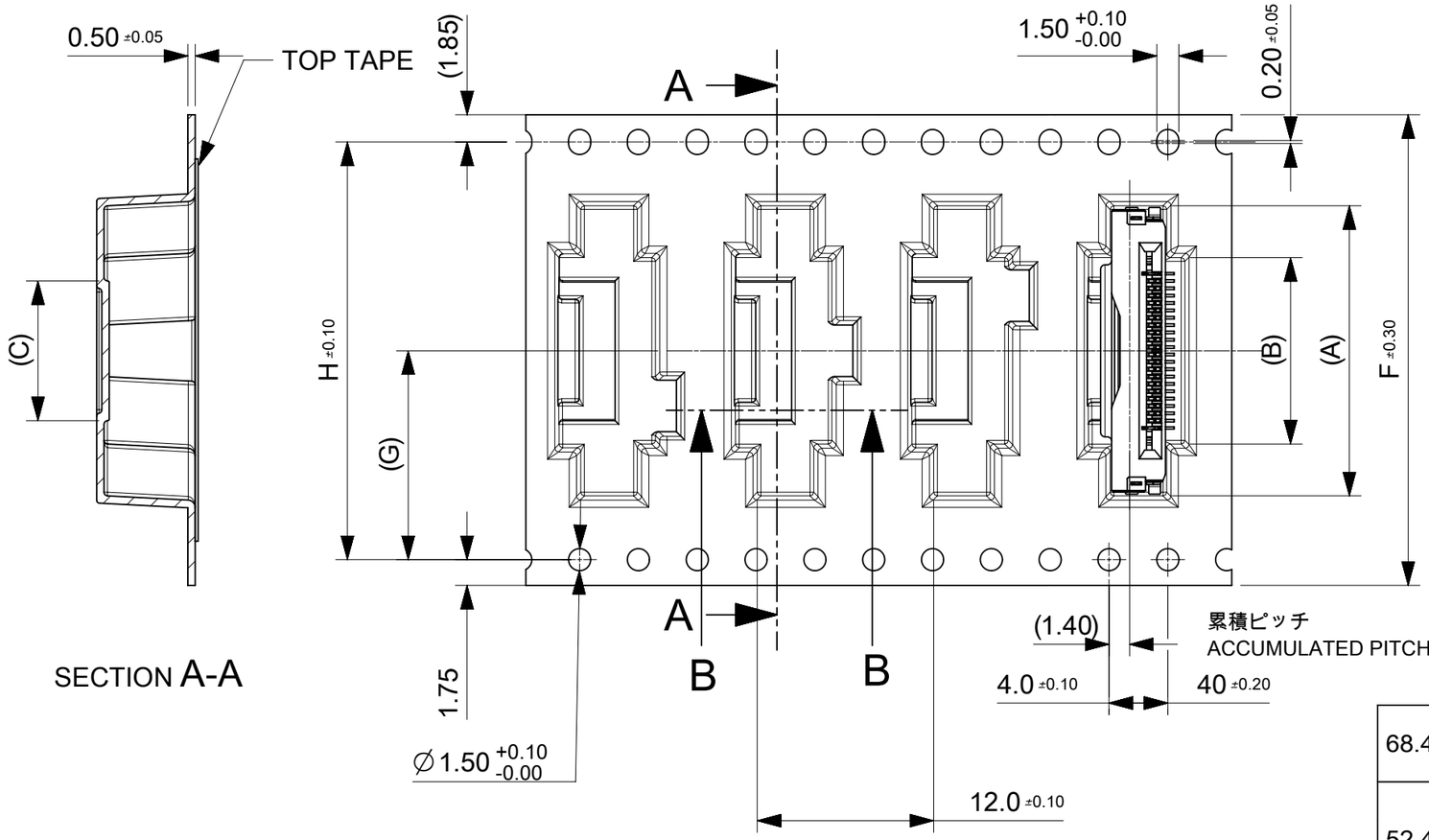

SECTION A-A

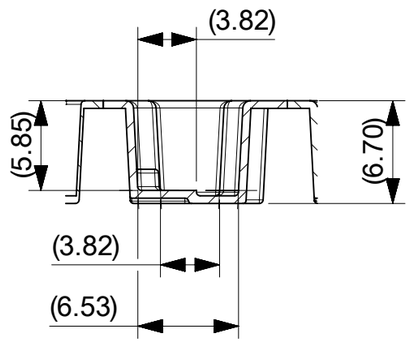

SECTION B-B

CONNECTOR NO. 20048517**

H	G	F	E	D	C	B	A	EMBOSSED PACKAGE / オーダー番号 ORDER NO.	Ckt
68.4	34.2	72	78.1	73.5	39.5	42.65	49.7	2004850780	80
					34.5	37.65	44.7	2004850770	70
52.4	26.2	56	61.4	75.4	29.5	32.65	39.7	2004850760	60
					25	28.15	35.2	2004850751	51
					24.5	27.65	34.7	2004850750	50
40.4	20.2	44	49.4	45.4	19.5	22.65	29.7	2004850740	40
					17	20.15	27.2	2004850735	35
					14.5	17.65	24.7	2004850730	30
28.4	14.2	32	37.4	33.4	9.5	12.65	19.7	2004850720	20

THIS DRAWING CONTAINS INFORMATION THAT IS PROPRIETARY TO MOLEX ELECTRONIC TECHNOLOGIES, LLC AND SHOULD NOT BE USED WITHOUT WRITTEN PERMISSION

DIMENSION UNITS	mm
SCALE	NTS
GENERAL TOLERANCES (UNLESS SPECIFIED)	
ANGULAR TOL	± 1.0 °
4 PLACES	± 0.1
3 PLACES	± 0.1
2 PLACES	± 0.1
1 PLACE	± 0.1
0 PLACES	± 0.1
DRAFT WHERE APPLICABLE MUST REMAIN WITHIN DIMENSIONS	

CURRENT REV DESC:

EC NO: 648126
DRWN: TYAMANE 2020/10/15
CHK'D: YMATSUMOTO 2020/10/30
APPR: SHOSHIKAWA 2020/11/02

INITIAL REVISION:
DRWN: TYAMANE 2018/10/03
APPR: SHOSHIKAWA 2020/06/08

THIRD ANGLE PROJECTION | DRAWING: A3-SIZE | SERIES: 200485

molex

EMB PKG ONE-TOUCH ST GND

PRODUCT CUSTOMER DRAWING

DOCUMENT NUMBER	DOC TYPE	DOC PART	REVISION
2004850700	PSD	000	B

MATERIAL NUMBER	CUSTOMER	SHEET NUMBER
SEE TABLE	GENERAL	3 OF 3

DOCUMENT STATUS	P1	RELEASE DATE	2020/11/02 06:52:25

FORMAT: master-lib-prod-A3
REVISION: J
DATE: 2020/01/14

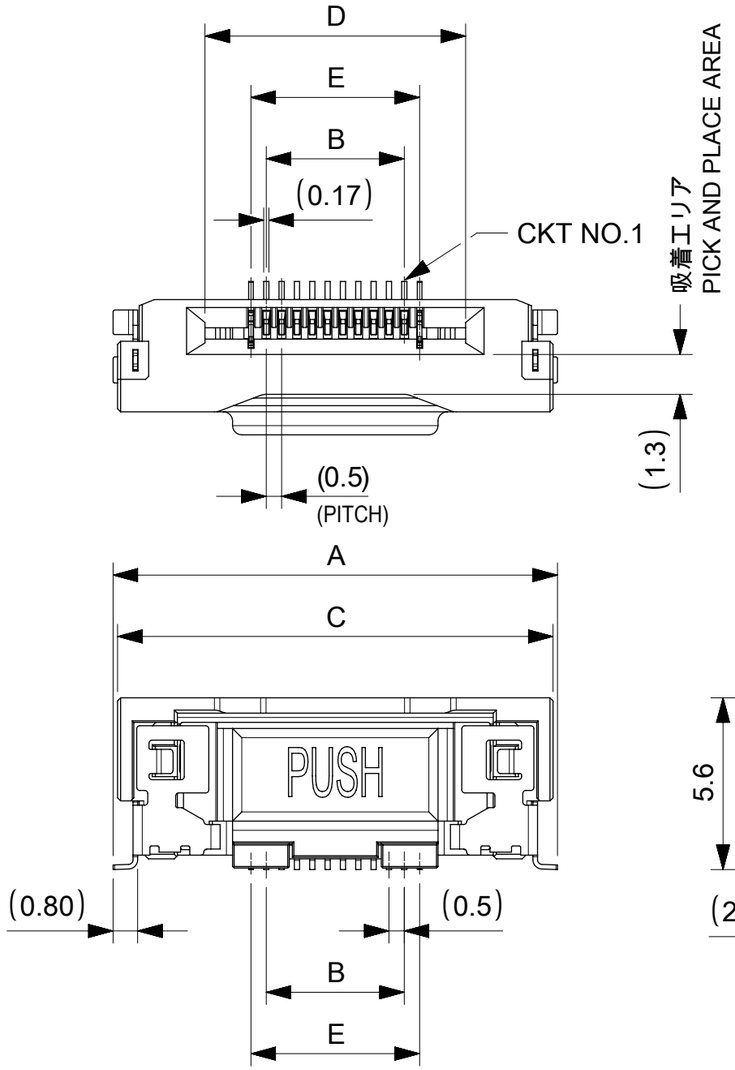

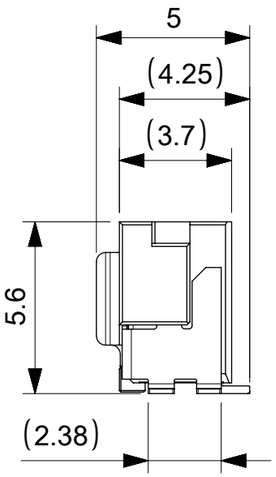

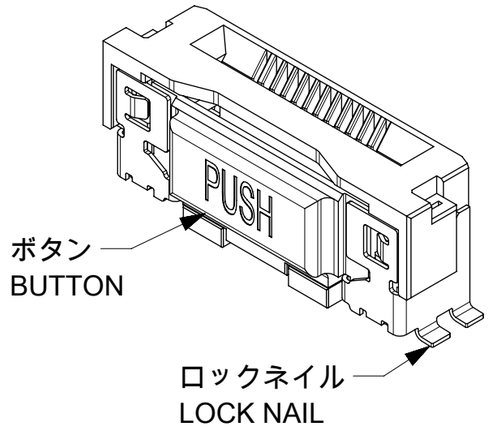

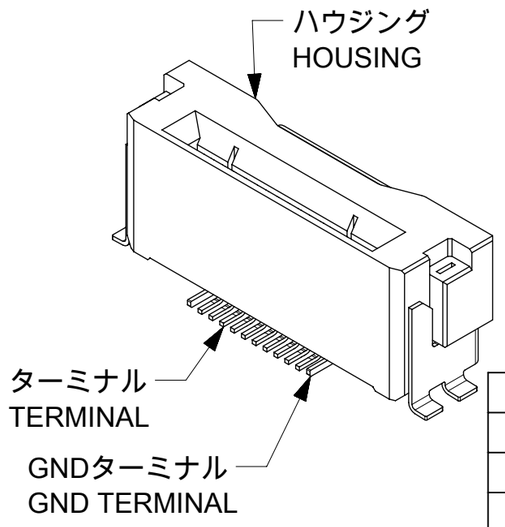

NOTES:
1.使用材料 MATERIAL
ハウジング : 液晶ポリマー, ガラス充填, UL94V-0(黒)
HOUSING : LIQUID CRYSTAL POLYMER, GLASS FILLED, UL94V-0(BLACK)
ボタン : 液晶ポリマー, ガラス充填, UL94V-0(ナチュラル)
BUTTON : LIQUID CRYSTAL POLYMER, GLASS FILLED, UL94V-0(NATURAL)
ターミナル : 銅合金(t=0.15)
TERMINAL : COPPER ALLOY
ロックネイル : 銅合金(t=0.15)
LOCK NAIL : COPPER ALLOY
GNDターミナル : 銅合金(t=0.15)
GND TERMINAL : COPPER ALLOY
2.めっき仕様 PLATING
ターミナル TERMINAL
接点部 ： 金めっき 0.1μm以上
CONTACT AREA : GOLD 0.1 MICROMETER MINIMUM
半田付け部：金めっき
SOLDER TAIL AREA : GOLD
下地めっき：ニッケル 1.0μm以上
UNDERPLATE : NICKEL 1.0 MICROMETER MINIMUM
ロックネイル LOCK NAIL
錫めっき(1.0μm以上)
TIN PLATING (1.0 MICROMETER MIN.)
GNDターミナル GND TERMINAL
錫めっき(1.0μm以上)
TIN PLATING (1.0 MICROMETER MIN.)
3.平坦度は0.1ミリ以下とする。
COPLANALITY TO BE 0.1 MAXIMUM.

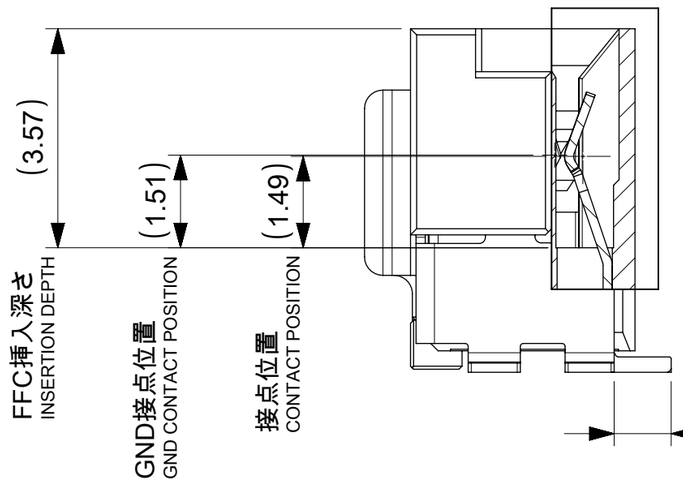

(1.04) GNDテール長さ GND TAIL LENGTH
(0.8) 端子テール長さ TERMINAL TAIL LENGTH

1.323	40.5	43.5	49.2	39.5	49.49	2004850780	80
1.215	35.5	38.5	44.2	34.5	44.49	2004850770	70
1.072	30.5	33.5	39.2	29.5	39.49	2004850760	60
0.957	26	29	34.7	25	34.99	2004850751	51
0.942	25.5	28.5	34.2	24.5	34.49	2004850750	50
0.796	20.5	23.5	29.2	19.5	29.49	2004850740	40
0.702	18	21	26.7	17	26.99	2004850735	35
0.650	15.5	18.5	24.2	14.5	24.49	2004850730	30
0.504	10.5	13.5	19.2	9.5	19.49	2004850720	20
0.358	5.5	8.5	14.2	4.5	14.49	2004850710	10
NET WEIGHT (g)	E	D	C	B	A	EMBOSSED PACKAGE	CIRC UIT
CONNECTOR SERIES NO. 20048517**						ORDER NO.	

THIS DRAWING CONTAINS INFORMATION THAT IS PROPRIETARY TO MOLEX ELECTRONIC TECHNOLOGIES, LLC AND SHOULD NOT BE USED WITHOUT WRITTEN PERMISSION

DIMENSION UNITS	mm
SCALE	5:1
GENERAL TOLERANCES (UNLESS SPECIFIED)	
ANGULAR TOL	± 1.0 °
4 PLACES	± 0.1
3 PLACES	± 0.1
2 PLACES	± 0.1
1 PLACE	± 0.1
0 PLACES	± 0.1
DRAFT WHERE APPLICABLE MUST REMAIN WITHIN DIMENSIONS	

CURRENT REV DESC:

EC NO: 753612
DRWN: RAJAGN 2023/06/15
CHK'D: HSHIMOYAMA 2023/06/16
APPR: YNAITO 2023/06/16

INITIAL REVISION:
DRWN: TYAMANE 2018/08/21
APPR: SHOSHIKAWA 2020/06/08

THIRD ANGLE PROJECTION | DRAWING: A3-SIZE | SERIES: 200485

molex

0.5FFC CONN. ST ONE TOUCH ASS'Y GND

PRODUCT CUSTOMER DRAWING

DOCUMENT NUMBER	DOC TYPE	DOC PART	REVISION
2004851700	PSD	000	E

MATERIAL NUMBER	CUSTOMER	SHEET NUMBER
SEE TABLE	GENERAL	1 OF 2

DOCUMENT STATUS	P1	RELEASE DATE	2023/06/16 06:21:59

FORMAT: master-tb-prod-A3
REVISION: J
DATE: 2020/01/14

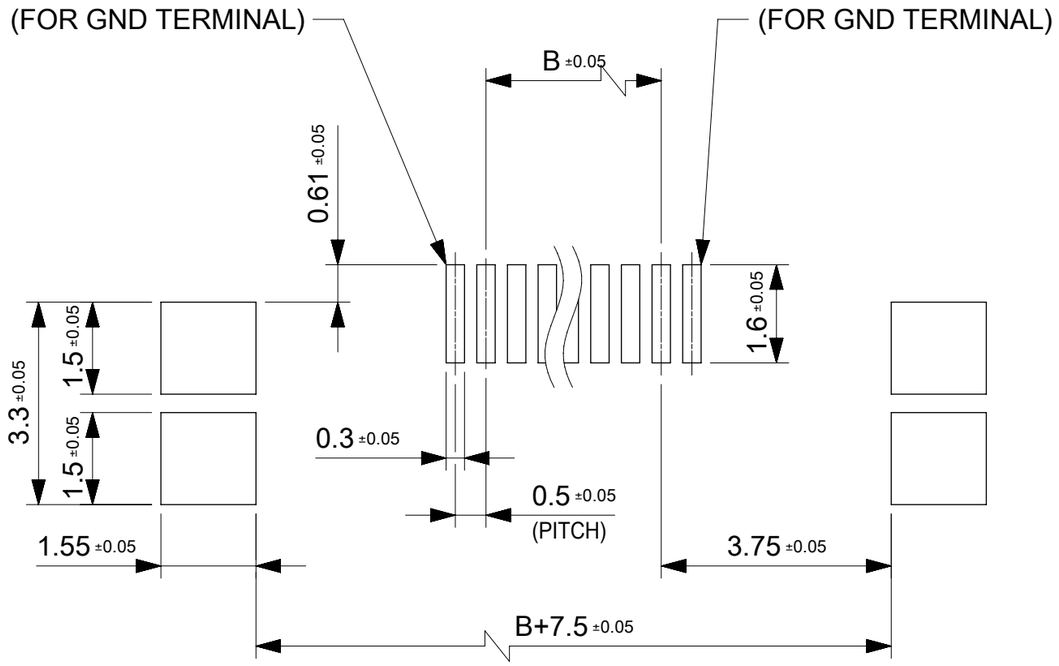

推奨PWB寸法
RECOMMENDED PWB DIMENSION
推奨メタルマスク厚、開口率：t=0.12mm, 80%
RECOMMENDED METAL MASK THICKNESS, APERTURE RATIO：t=0.12mm, 80%
ロックネイル部開口率は100%
APERTURE RATIO FOR LOCK NAIL: 100%

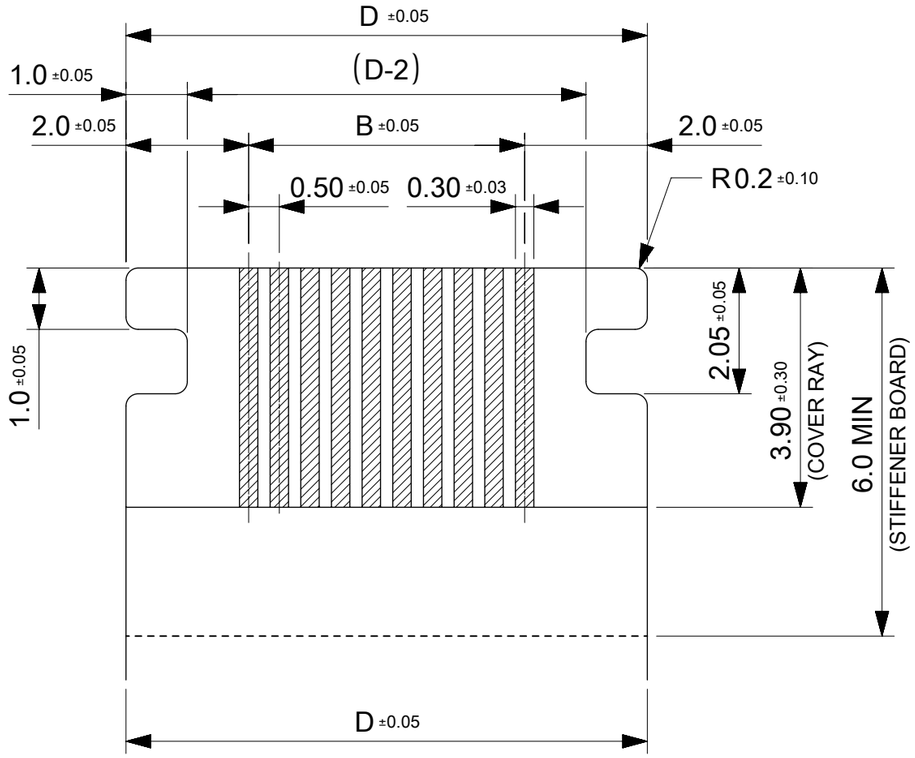

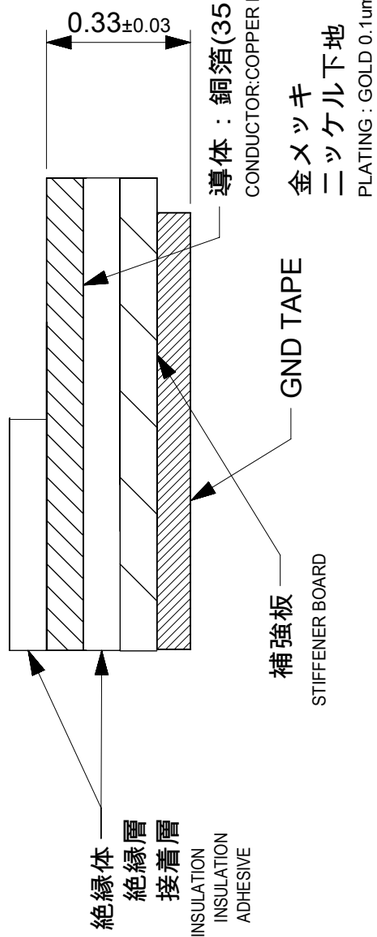

推奨FFC寸法
RECOMMENDED FFC DIMENSION

抜き方向は導体側から補強版側を推奨します
RECOMMENDED PUNCHING DIRECTION:
FROM CONDUCTOR SIDE TO STIFFENER SIDE

THIS DRAWING CONTAINS INFORMATION THAT IS PROPRIETARY TO MOLEX ELECTRONIC TECHNOLOGIES, LLC AND SHOULD NOT BE USED WITHOUT WRITTEN PERMISSION

DIMENSION UNITS	SCALE
mm	10:1

GENERAL TOLERANCES (UNLESS SPECIFIED)		
ANGULAR TOL	±	1.0 °
4 PLACES	±	0.1
3 PLACES	±	0.1
2 PLACES	±	0.1
1 PLACE	±	0.1
0 PLACES	±	0.1

DRAFT WHERE APPLICABLE MUST REMAIN WITHIN DIMENSIONS

CURRENT REV DESC:

EC NO: 753612
DRWN: RAJAGN 2023/06/15
CHK'D: HSHIMOYAMA 2023/06/16
APPR: YNAITO 2023/06/16

INITIAL REVISION:
DRWN: TYAMANE 2018/08/21
APPR: SHOSHIKAWA 2020/06/08

THIRD ANGLE PROJECTION	DRAWING	SERIES
	A3-SIZE	200485

molex

0.5FFC CONN. ST ONE TOUCH ASS'Y GND

PRODUCT CUSTOMER DRAWING

DOCUMENT NUMBER	DOC TYPE	DOC PART	REVISION
2004851700	PSD	000	E

MATERIAL NUMBER	CUSTOMER	SHEET NUMBER
SEE TABLE	GENERAL	2 OF 2

DOCUMENT STATUS	P1	RELEASE DATE	2023/06/16 06:21:59

FORMAT: master-tb-prod-A3
REVISION: J
DATE: 2020/01/14