MATERIALS AND FINISHES:

SEE PSD-85305-0232

PART NO.	PACKAGING	QUANTITY	
73415-6183	85305-0232, TAPE AND REEL WITH KAPTON TAPE	1K PER REEL	1K PER CARTON
73415-6182	85305-0232, TAPE AND REEL	1K PER REEL	1K PER CARTON
73415-6181	85305-0232, TAPE AND REEL WITH KAPTON TAPE	1K PER REEL	7K PER CARTON
73415-6180	85305-0232, ONE PER BAG	ONE PER BAG	500 PER CARTON

REV	DATE	DESCRIPTION
A4	2019/11/26	ADD -6183 PER EWR #13478-A

THIS DRAWING CONTAINS INFORMATION THAT IS PROPRIETARY TO MOLEX ELECTRONIC TECHNOLOGIES, LLC AND SHOULD NOT BE USED WITHOUT WRITTEN PERMISSION

DIMENSION UNITS: INCH/MM | SCALE: NTS

GENERAL TOLERANCES (UNLESS SPECIFIED)

ANGULAR TOL	± 2.0 °
4 PLACES	±
3 PLACES	±
2 PLACES	± 0.25
1 PLACE	±
0 PLACES	±

DRAFT WHERE APPLICABLE MUST REMAIN WITHIN DIMENSIONS

CURRENT REV DESC:

EC NO: 628191
DRWN: RYEH 2019/11/26
CHK'D: YCHENG 2019/12/06
APPR: YCHENG 2019/12/06

INITIAL REVISION:
DRWN: SSHAH 2007/05/11
APPR: JWIENER 2007/05/11

THIRD ANGLE PROJECTION | DRAWING: C-SIZE | SERIES: 73415

molex

SMP, PLUG SMT
LIMITED DETENT SMP-P/PCB

PRODUCT CUSTOMER DRAWING

DOCUMENT NUMBER	DOC TYPE	DOC PART	REVISION
SD-73415-618	PSD	001	A4

MATERIAL NUMBER	CUSTOMER	SHEET NUMBER
SEE TABLE	GENERAL MARKET	1 OF 1

DOCUMENT STATUS	P1	RELEASE DATE	2019/12/06 07:42:40

FORMAT: master-tb-prod-C
REVISION: H
DATE: 2018/01/18

MATERIALS AND FINISHES:

INNER & OUTER CONTACT: BRASS
PLATED: GOLD (30µ-in MIN)
OVER NICKEL (100µ-in MIN)

INSULATOR: LCP
UL FLAMMABILITY RATING 94 V-0

KAPTON: POLYAMIDE
COLOR: AMBER

TAPE: SHEET 3

REEL: SHEET 4

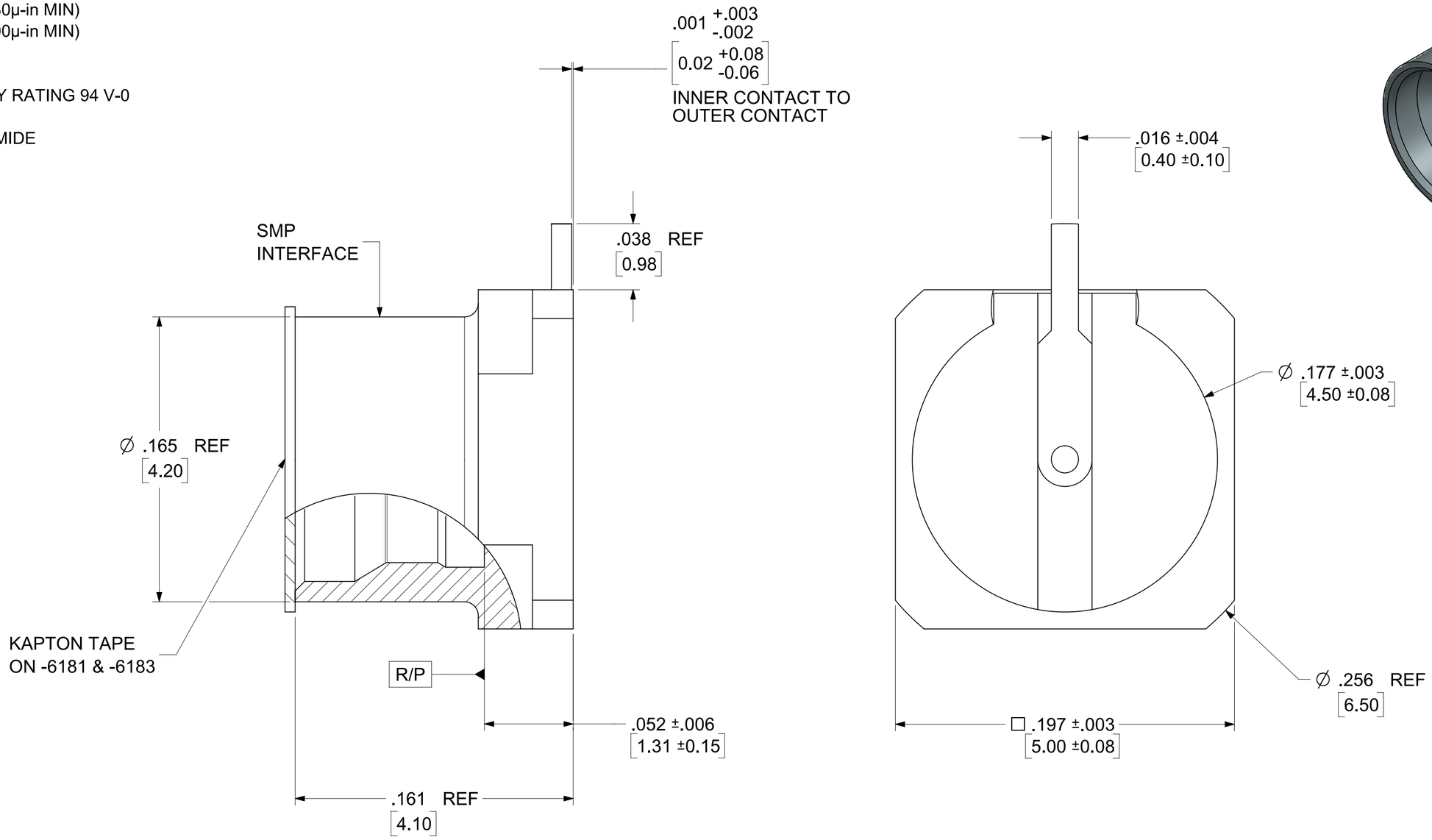

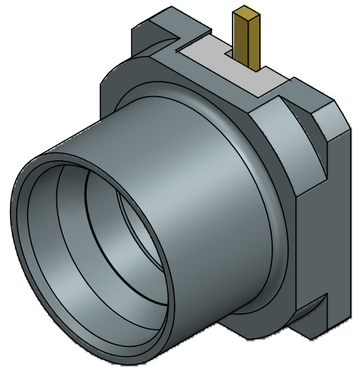

73415-6183	85305-0232, TAPE AND REEL WITH KAPTON TAPE	1K PER REEL	1K PER CARTON
73415-6182	85305-0232, TAPE AND REEL	1K PER REEL	1K PER CARTON
73415-6181	85305-0232, TAPE AND REEL WITH KAPTON TAPE	1K PER REEL	7K PER CARTON
73415-6180	85305-0232, ONE PER BAG	ONE PER BAG	500 PER CARTON
85305-0232	TAPE AND REEL	1K PER REEL	7K PER CARTON
PART NO.	PACKAGING	QUANTITY	

PS-89675-3320	PRODUCT SPECIFICATION
MIL-STD-248, FIG 326-3	INTERFACE, SMP, LIMITED DETENT
SPECIFICATION	DESCRIPTION

THIS DRAWING CONTAINS INFORMATION THAT IS PROPRIETARY TO MOLEX ELECTRONIC TECHNOLOGIES, LLC AND SHOULD NOT BE USED WITHOUT WRITTEN PERMISSION

DIMENSION UNITS: INCH/MM
SCALE: NTS

GENERAL TOLERANCES (UNLESS SPECIFIED)

	MM	INCH
4 PLACES	±	±
3 PLACES	±	± 0.0050
2 PLACES	± 0.130	± 0.010
1 PLACE	± 0.25	±
0 PLACES	±	±
ANGULAR TOL	± 2°	

DRAFT WHERE APPLICABLE MUST REMAIN WITHIN DIMENSIONS

CURRENT REV DESC: ADD SQ TO SOLDERMASK SIZE .205" [5.20] PER EWR 11818-E

STATUS: Production
DRWN: Ricky Yeh 2024-09-11
CHK'D: Kerrie Chen 2024-10-15
APPR: Darry Cheng 2024-10-16

INITIAL REVISION:
DRWN: RFC_PLMIMP 2018-01-19
APPR:

THIRD ANGLE PROJECTION | DRAWING: C-SIZE | SERIES: 85305

molex

SMP, PLUG SMT
LIMITED DETENT SMP-P/PCB, EWR-11818

PRODUCT CUSTOMER DRAWING

DOCUMENT NUMBER	DOC TYPE	DOC PART	REVISION
SD-85305-0232	PSD	001	B19

MATERIAL NUMBER	CUSTOMER	SHEET NUMBER
SEE TABLE		1 OF 5

FORMAT: Engdega-TC-tb-prod-C
REVISION: B
DATE: 2023/10/23

PCB CONNECTOR LAUNCH / PAD (FOR REFERENCE ONLY)

ALL HATCHED SURFACES SHOWN BELOW ARE COPPER (Cu)

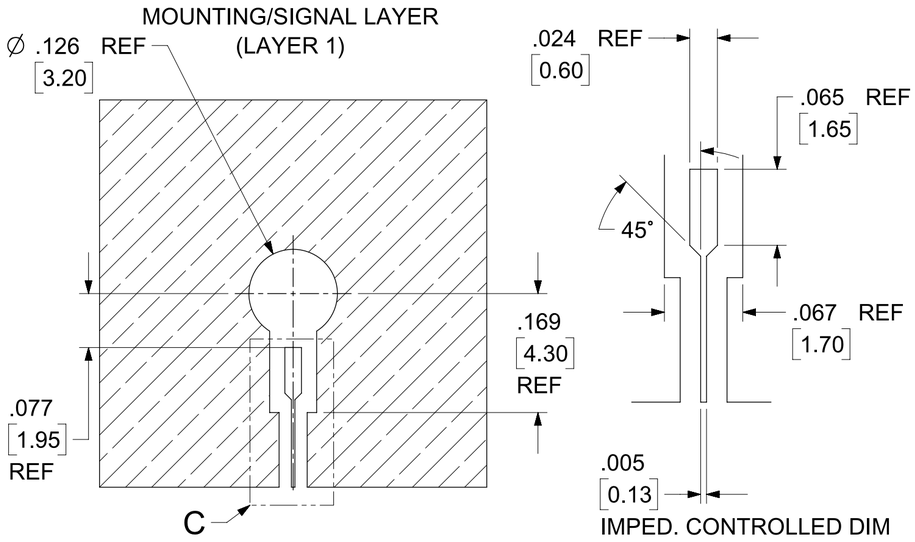

DETAIL C

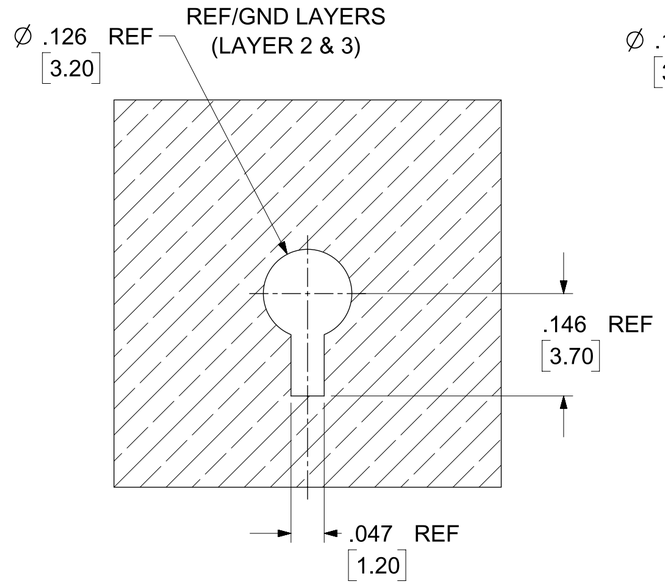

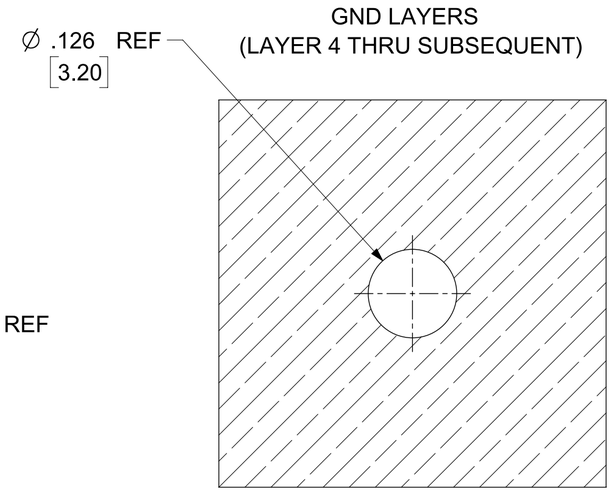

PCB STACK UP

LAYER	MATERIAL	Dk	THICKNESS (MM)
1	1/2 oz. Cu + PLATING		0.0434
	ISOLA FR408	3.67	0.07
2	1/2 oz. Cu		0.018
	ISOLA FR408	3.67	0.1464
3	1/2 oz. Cu		0.018
	ISOLA FR408	3.67	0.6784
4*	1/2 oz. Cu		0.018

* SUBSEQUENT LAYERS MAY BE ADDED AS REQUIRED FOR INDIVIDUAL APPLICATIONS

VIAs AND THRU HOLES

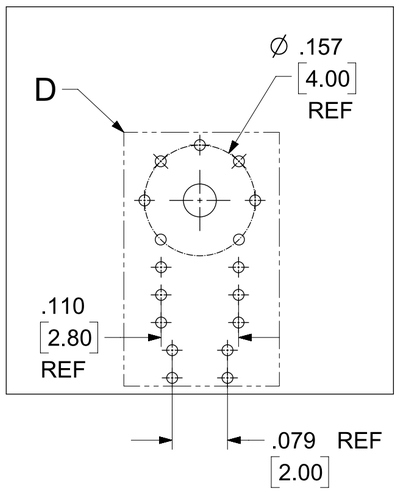

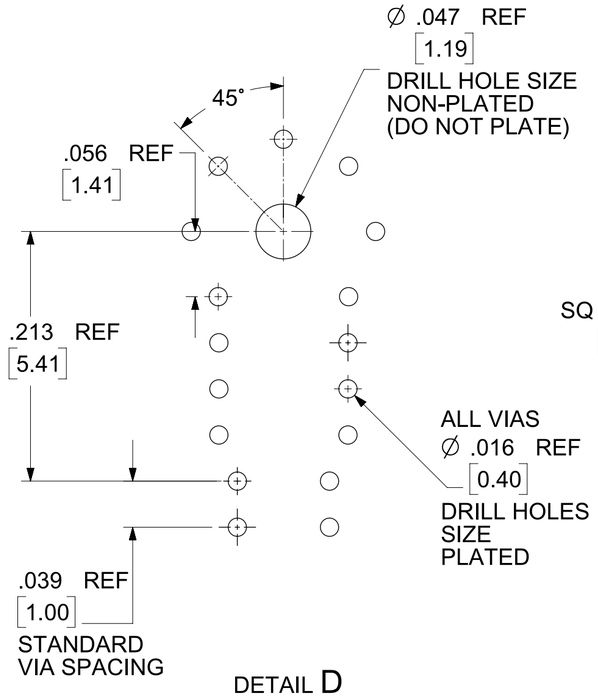

DETAIL D

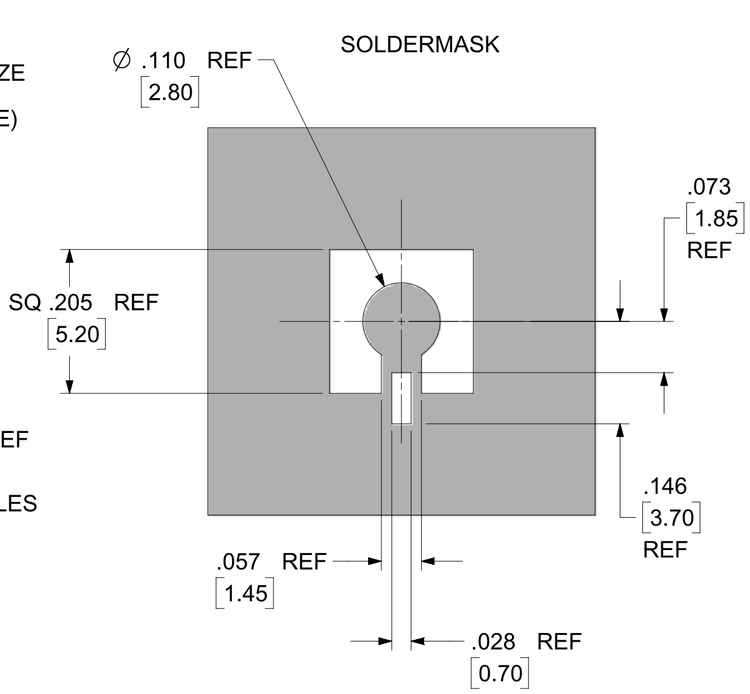

TYPICAL PERFORMANCE CHARACTERISTICS WITH CONNECTOR AND PCB LAUNCH SHOWN

Typical Return Loss	FREQUENCY BAND
20dB	DC TO 18GHz

VARYING PCB STACKUPS AND PCB LAUNCH WILL RESULT IN VARYING RESULTS

CONTACT MOLEX RF / MICROWAVE FOR APPLICATION SPECIFIC ASSISTANCE

THIS DRAWING CONTAINS INFORMATION THAT IS PROPRIETARY TO MOLEX ELECTRONIC TECHNOLOGIES, LLC AND SHOULD NOT BE USED WITHOUT WRITTEN PERMISSION

DIMENSION UNITS: INCH/MM | SCALE: NTS

GENERAL TOLERANCES (UNLESS SPECIFIED)

	MM	INCH
4 PLACES	±	±
3 PLACES	±	± 0.0050
2 PLACES	± 0.130	± 0.010
1 PLACE	± 0.25	±
0 PLACES	±	±
ANGULAR TOL	± 2°	

DRAFT WHERE APPLICABLE MUST REMAIN WITHIN DIMENSIONS

CURRENT REV DESC: ADD SQ TO SOLDERMASK SIZE .205" [5.20] PER EWR 11818-E

STATUS: Production
DRWN: Ricky Yeh 2024-09-11
CHK'D: Kerrie Chen 2024-10-15
APPR: Darry Cheng 2024-10-16

INITIAL REVISION:
DRWN: RFC_PLMIMP 2018-01-19
APPR:

THIRD ANGLE PROJECTION | DRAWING: C-SIZE | SERIES: 85305

molex

SMP, PLUG SMT
LIMITED DETENT SMP-P/PCB, EWR-11818

PRODUCT CUSTOMER DRAWING

DOCUMENT NUMBER	DOC TYPE	DOC PART	REVISION
SD-85305-0232	PSD	001	B19

MATERIAL NUMBER: SEE TABLE | CUSTOMER: | SHEET NUMBER: 2 OF 5

FORMAT: Engdega-TC-tb-prod-C
REVISION: B
DATE: 2023/10/23

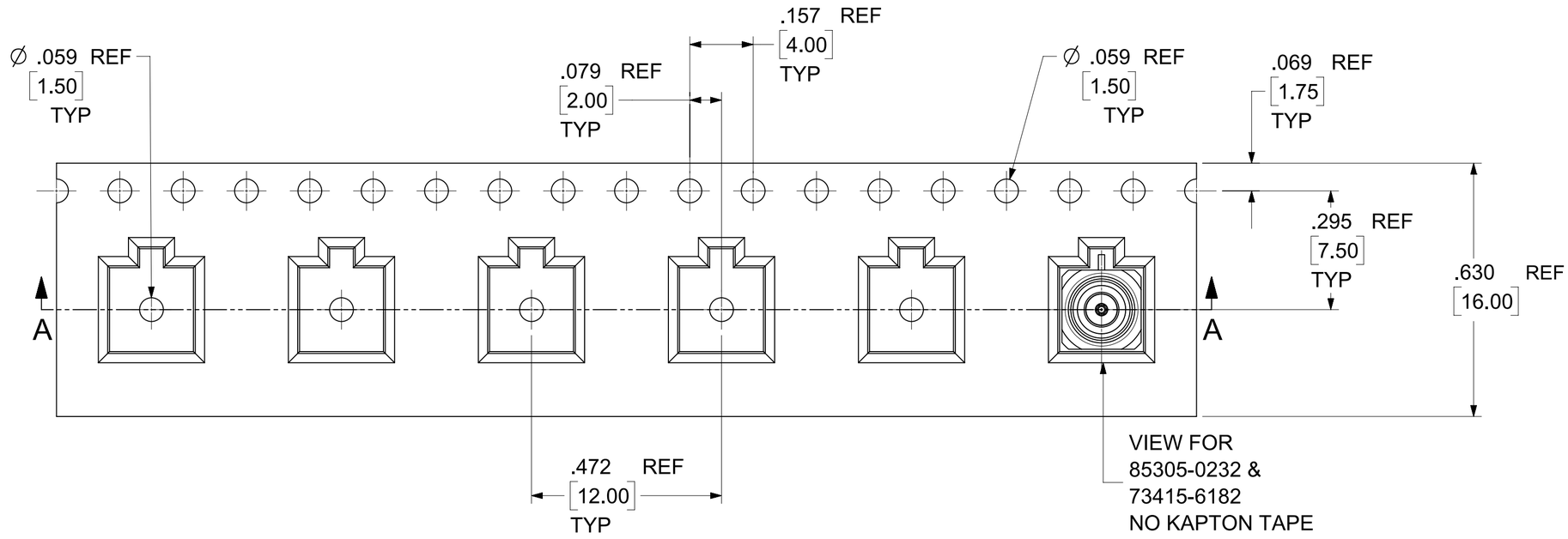

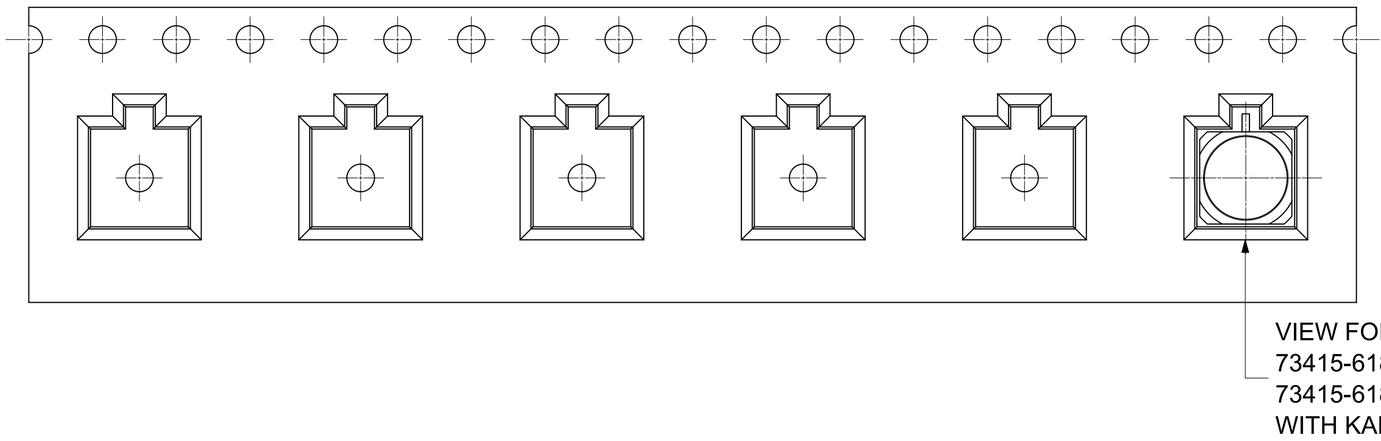

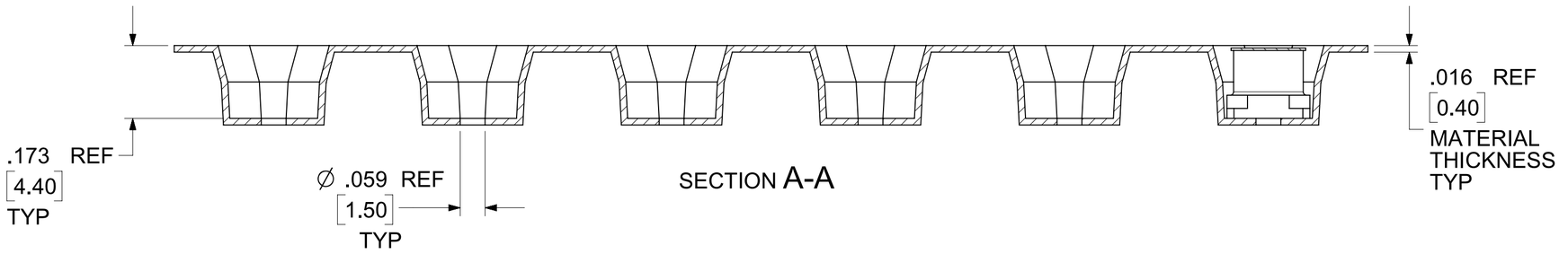

THIS DRAWING CONTAINS INFORMATION THAT IS PROPRIETARY TO MOLEX ELECTRONIC TECHNOLOGIES, LLC AND SHOULD NOT BE USED WITHOUT WRITTEN PERMISSION

DIMENSION UNITS	SCALE
INCH/MM	NTS

GENERAL TOLERANCES (UNLESS SPECIFIED)

	MM	INCH
4 PLACES	±	±
3 PLACES	±	± 0.0050
2 PLACES	± 0.130	± 0.010
1 PLACE	± 0.25	±
0 PLACES	±	±
ANGULAR TOL	± 2˚	

DRAFT WHERE APPLICABLE MUST REMAIN WITHIN DIMENSIONS

CURRENT REV DESC: ADD SQ TO SOLDERMASK SIZE .205" [5.20] PER EWR 11818-E

STATUS: Production
DRWN: Ricky Yeh 2024-09-11
CHK'D: Kerrie Chen 2024-10-15
APPR: Darry Cheng 2024-10-16

INITIAL REVISION:
DRWN: RFC_PLMIMP 2018-01-19
APPR:

THIRD ANGLE PROJECTION | DRAWING: C-SIZE | SERIES: 85305

molex

SMP, PLUG SMT
LIMITED DETENT SMP-P/PCB, EWR-11818

PRODUCT CUSTOMER DRAWING

DOCUMENT NUMBER	DOC TYPE	DOC PART	REVISION
SD-85305-0232	PSD	001	B19

MATERIAL NUMBER	CUSTOMER	SHEET NUMBER
SEE TABLE		3 OF 5

FORMAT: EngMega-TCnB-prod-C
REVISION: B
DATE: 2023/10/23

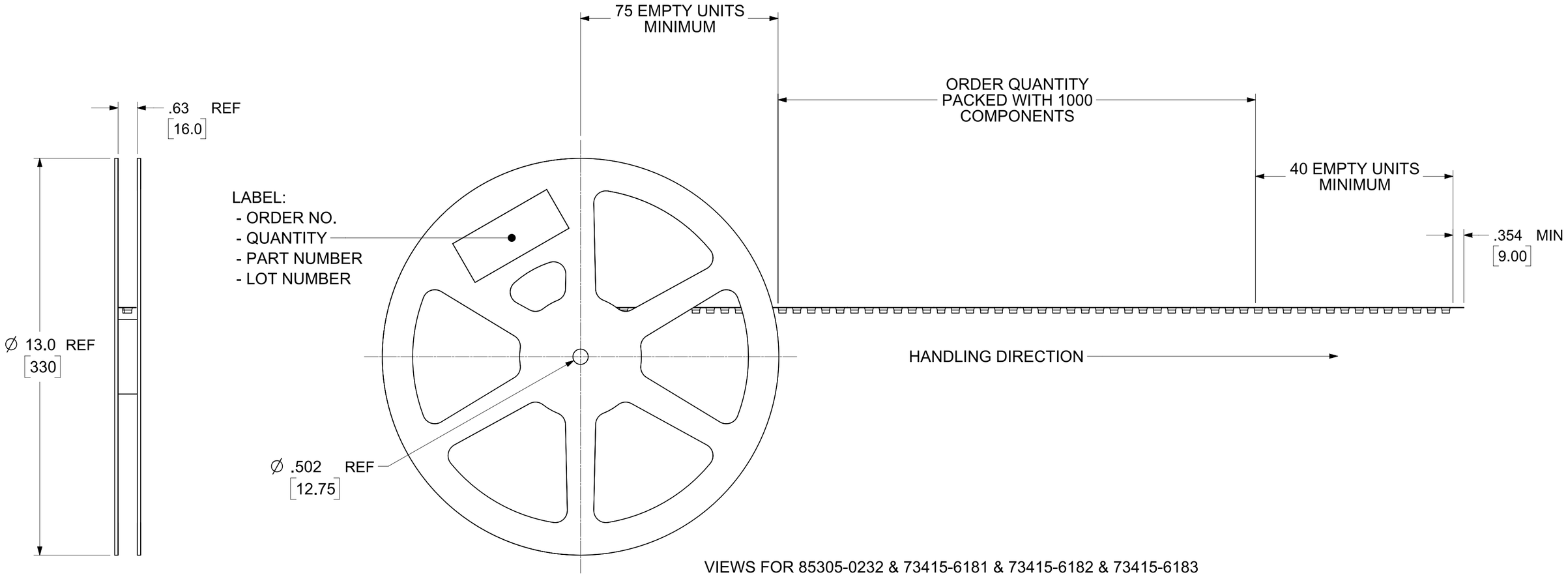

VIEWS FOR 85305-0232 & 73415-6181 & 73415-6182 & 73415-6183

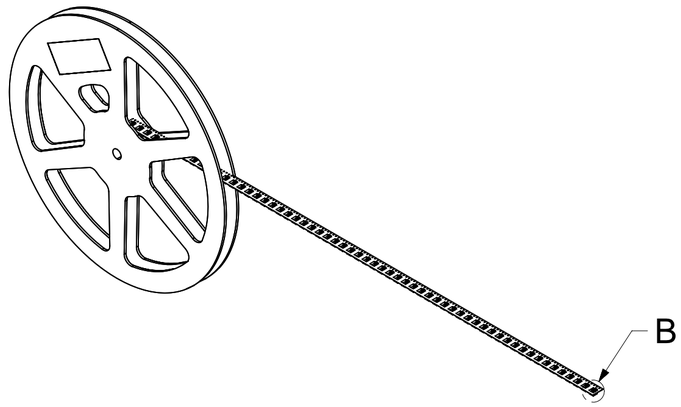

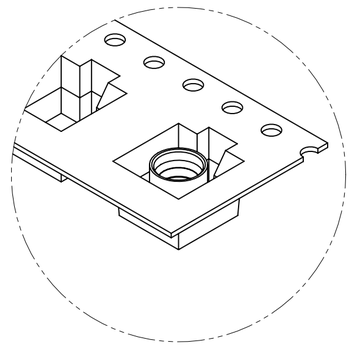

DETAIL B

THIS DRAWING CONTAINS INFORMATION THAT IS PROPRIETARY TO MOLEX ELECTRONIC TECHNOLOGIES, LLC AND SHOULD NOT BE USED WITHOUT WRITTEN PERMISSION

DIMENSION UNITS	SCALE
INCH/MM	NTS

GENERAL TOLERANCES (UNLESS SPECIFIED)

	MM	INCH
4 PLACES	±	±
3 PLACES	±	± 0.0050
2 PLACES	± 0.130	± 0.010
1 PLACE	± 0.25	±
0 PLACES	±	±
ANGULAR TOL	± 2°	

DRAFT WHERE APPLICABLE MUST REMAIN WITHIN DIMENSIONS

CURRENT REV DESC: ADD SQ TO SOLDERMASK SIZE .205" [5.20] PER EWR 11818-E

STATUS:	Production	
DRWN:	Ricky Yeh	2024-09-11
CHK'D:	Kerrie Chen	2024-10-15
APPR:	Darry Cheng	2024-10-16

INITIAL REVISION:
DRWN: RFC_PLMIMP 2018-01-19
APPR:

molex

SMP, PLUG SMT
LIMITED DETENT SMP-P/PCB, EWR-11818

PRODUCT CUSTOMER DRAWING

DOCUMENT NUMBER	DOC TYPE	DOC PART	REVISION
SD-85305-0232	PSD	001	B19

THIRD ANGLE PROJECTION	DRAWING	SERIES	MATERIAL NUMBER	CUSTOMER	SHEET NUMBER
	C-SIZE	85305	SEE TABLE		4 OF 5

FORMAT: EngMgr-TC4b+prod-C
REVISION: B
DATE: 2023-10-23

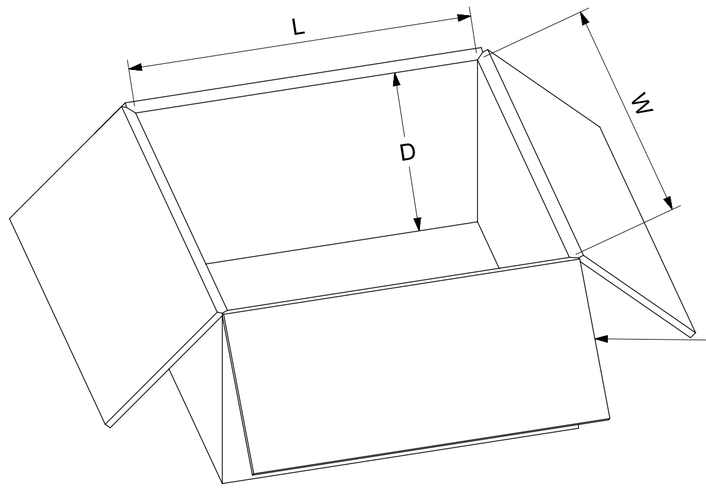

1K PCS PER REEL
7 REELS PER CARTON
7 X 1000 = 7K PCS
MAXIMUM OUTSIDE SIZE (mm):
L=393.94
W=390.92
D=211.89

VIEW FOR 85305-0232 & 73415-6181

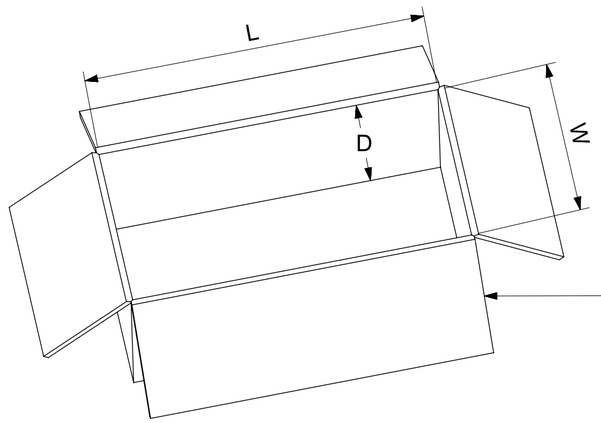

1 PC PER BAG
500 PCS PER CARTON
MAXIMUM OUTSIDE SIZE (mm):
L=571.94
W=183.94
D=191.87

VIEW FOR 73415-6180

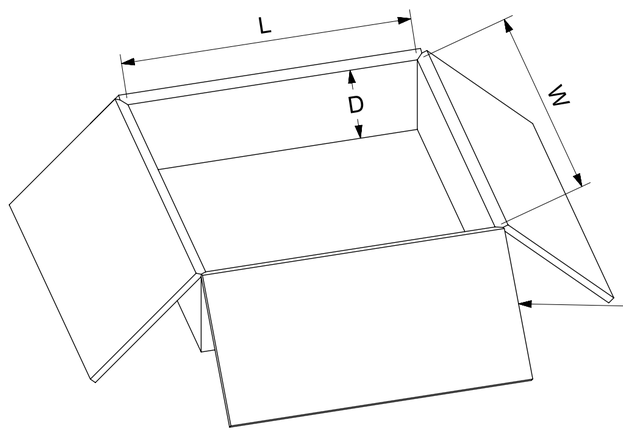

1K PCS PER REEL
1 REEL PER CARTON
1 X 1000 = 1K PCS
MAXIMUM OUTSIDE SIZE (mm):
L=340
W=340
D=100

VIEW FOR 73415-6182 & 73415-6183

PART NO.	PACKAGING	QUANTITY	
73415-6183	85305-0232, TAPE AND REEL WITH KAPTON TAPE	1K PER REEL	1K PER CARTON
73415-6182	85305-0232, TAPE AND REEL	1K PER REEL	1K PER CARTON
73415-6181	85305-0232, TAPE AND REEL WITH KAPTON TAPE	1K PER REEL	7K PER CARTON
73415-6180	85305-0232, ONE PER BAG	ONE PER BAG	500 PER CARTON
85305-0232	TAPE AND REEL	1K PER REEL	7K PER CARTON

THIS DRAWING CONTAINS INFORMATION THAT IS PROPRIETARY TO MOLEX ELECTRONIC TECHNOLOGIES, LLC AND SHOULD NOT BE USED WITHOUT WRITTEN PERMISSION

DIMENSION UNITS: INCH/MM
SCALE: NTS

GENERAL TOLERANCES (UNLESS SPECIFIED)

	MM	INCH
4 PLACES	±	±
3 PLACES	±	± 0.0050
2 PLACES	± 0.130	± 0.010
1 PLACE	± 0.25	±
0 PLACES	±	±
ANGULAR TOL	± 2°	

DRAFT WHERE APPLICABLE MUST REMAIN WITHIN DIMENSIONS

CURRENT REV DESC: ADD SQ TO SOLDERMASK SIZE .205" [5.20] PER EWR 11818-E

STATUS: Production
DRWN: Ricky Yeh 2024-09-11
CHK'D: Kerrie Chen 2024-10-15
APPR: Darry Cheng 2024-10-16

INITIAL REVISION:
DRWN: RFC_PLMIMP 2018-01-19
APPR:

THIRD ANGLE PROJECTION | DRAWING: C-SIZE | SERIES: 85305

molex

SMP, PLUG SMT
LIMITED DETENT SMP-P/PCB, EWR-11818

PRODUCT CUSTOMER DRAWING

DOCUMENT NUMBER	DOC TYPE	DOC PART	REVISION
SD-85305-0232	PSD	001	B19

MATERIAL NUMBER	CUSTOMER	SHEET NUMBER
SEE TABLE		5 OF 5

FORMAT: Engdega-TC-tb-prod-C
REVISION: B
DATE: 2023/10/23