GIGABIT 8 PORT MAGNETIC JACK WITH LED's
AND INTEGRATED POWER OVER ETHERNET TRANSFORMERS
ACCORDING TO IEEE Std802.3-2012 FOR PSE (30 WATT) APPLICATIONS

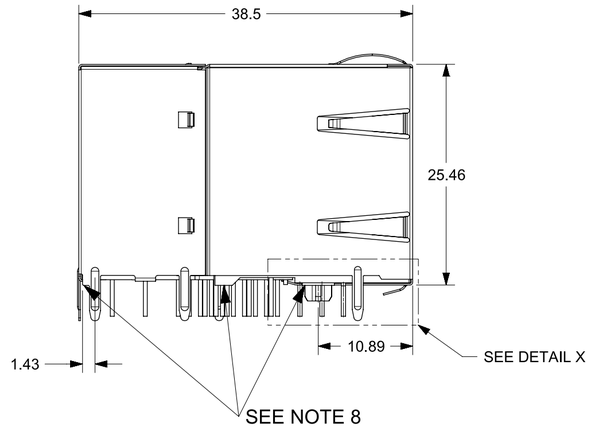

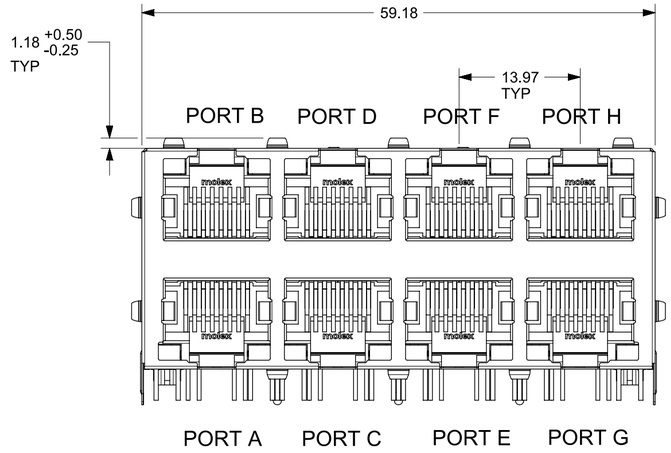

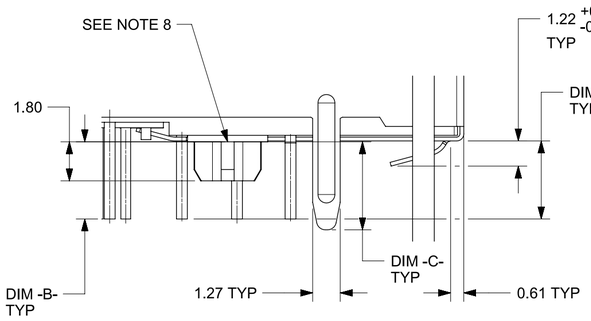

DETAIL X
SCALE 5:1

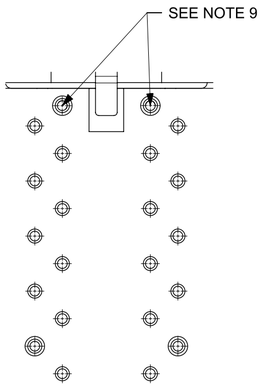

DETAIL Y
SCALE 5:1

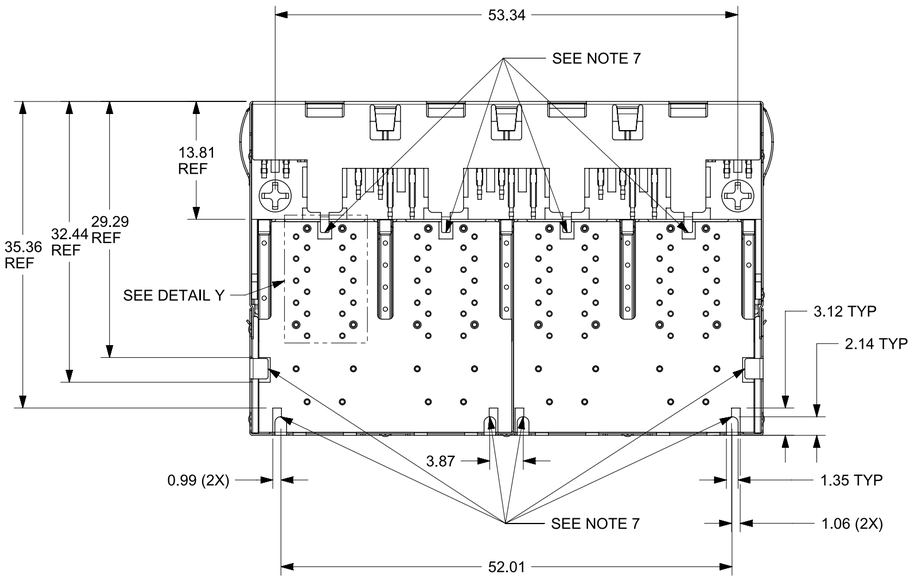

NOTES:
1 - SHIELD MATERIAL: BRASS; PLATING: NICKEL PRE-PLATING
2 - PLASTIC MATERIAL: POLYESTER (PBT) BLACK, 30%GR, UL 94V-0
3 - RJ45 TERMINALS MATERIAL: COPPER ALLOY
CONTACT PLATING: 0.76 MICROMETER GOLD OVER 1.9 MICROMETER NICKEL
PHY TERMINALS: TIN PLATED
4 - MATING INTERFACE ACCORDING TO IEC 60603-7
5 - PRODUCT SPECIFICATION: PS-85732-001
6 - PACKAGING SPECIFICATION: PK-85735-001
7 - SYSTEM BOARD TRACES WITHOUT INSULATION NOT ALLOWED IN THE SOLDERED AREA (SHILED SOLDERED WITH PCB PAD) TO AVOID SHORTS TO SHIELD
8 - STAND OFF TO SYSTEM BOARD
9 - STUBBED PINS -> AVOIDE TO ROUTE TRACES OR TO PLACE ANY VIAS OR PADS BELOW THESE PINS ON SYSTEM BOARD
10 - FOR MAGNETICS AND LED INFORMATION SEE SPEC PS-85732-001

REVISION CHART

REV	CHANGE CONTENT
C2	85735-1102 G/Y LED SHORTEN SHIELD PIN LENGTH
C3	REMOVED OBSOLETED PART NUMBER AS PER PCN#512132.
C4	MIGRATED TO TEAMCENTER
C5	OBSOLETED PART NUMBER 857351101

THIS DRAWING CONTAINS INFORMATION THAT IS PROPRIETARY TO MOLEX ELECTRONIC TECHNOLOGIES, LLC AND SHOULD NOT BE USED WITHOUT WRITTEN PERMISSION

DIMENSION UNITS	SCALE
mm	2:1

GENERAL TOLERANCES (UNLESS SPECIFIED)

ANGULAR TOL	± 0.5°
4 PLACES	±
3 PLACES	±
2 PLACES	± 0.250
1 PLACE	± 0.50
0 PLACES	±

DRAFT WHERE APPLICABLE MUST REMAIN WITHIN DIMENSIONS

CURRENT REV DESC: REMOVED OBSOLETED PART NUMBER AS PER PCN#514494.

STATUS: Production
DRWN: Ravindra Reddy MS 2023-11-09
CHK'D: Ganesh Rao B 2023-12-20
APPR: Gurunandan GA 2023-12-20

molex

GIGABIT MAGNETIC JACK
POE PLUS ENABLED 2X4 LED

PRODUCT SALES DRAWING

DOCUMENT NUMBER	DOC TYPE	DOC PART	REVISION
SD-85735-101	PSD	001	C5

THIRD ANGLE PROJECTION	DRAWING	SERIES	MATERIAL NUMBER	CUSTOMER	SHEET NUMBER
	A2-SIZE	85735	SEE PN TABLE	GENERAL MARKET	1 OF 4

FORMAT: TC4b-prod-A2
REVISION: B
DATE: 2022/08/01

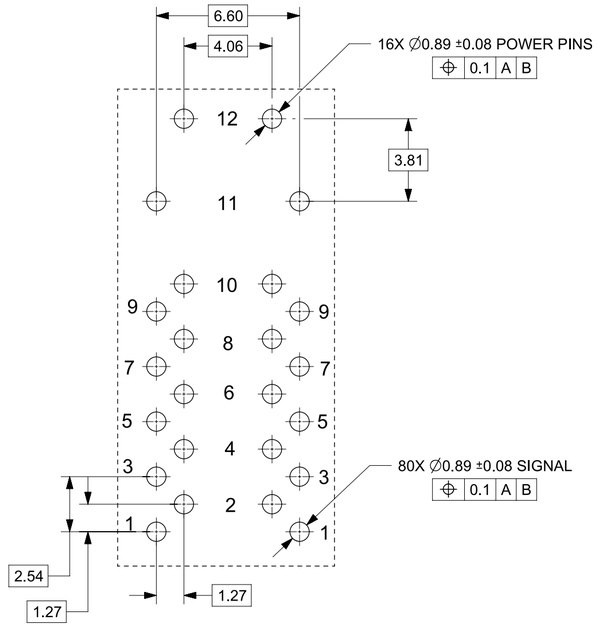

DETAIL Z
SCALE 5:1

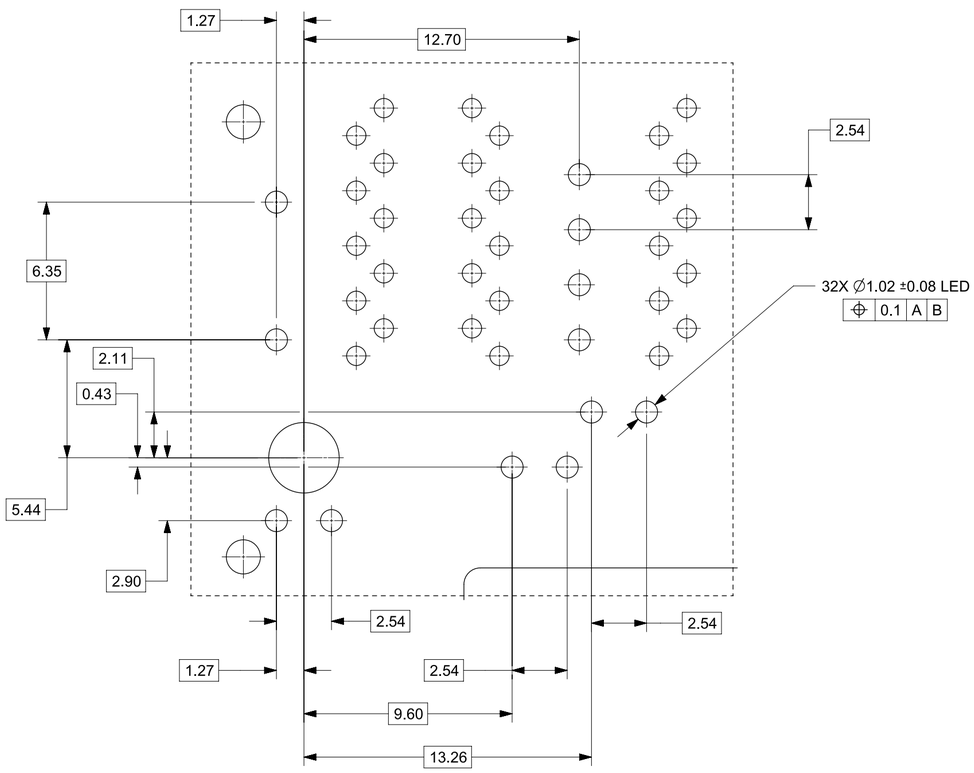

DETAIL XX
SCALE 5:1

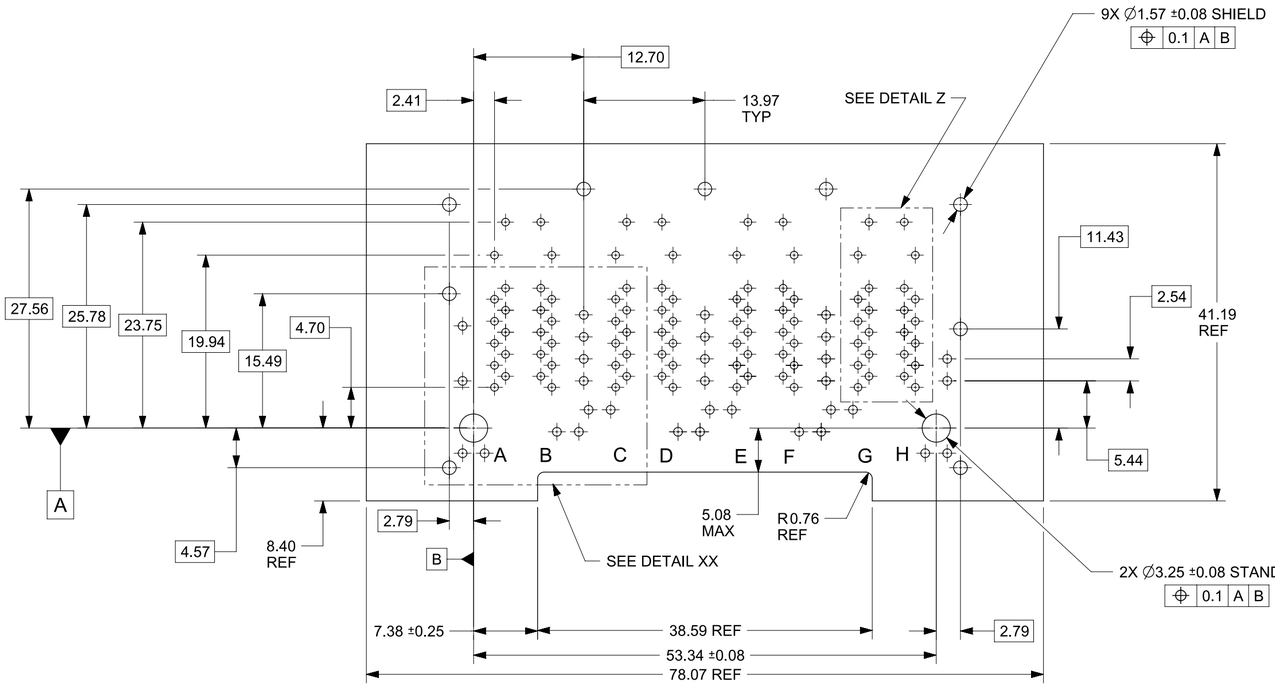

PCB LAYOUT: COMPONENT SIDE

THIS DRAWING CONTAINS INFORMATION THAT IS PROPRIETARY TO MOLEX ELECTRONIC TECHNOLOGIES, LLC AND SHOULD NOT BE USED WITHOUT WRITTEN PERMISSION

DIMENSION UNITS	SCALE
mm	2:1

GENERAL TOLERANCES (UNLESS SPECIFIED)

ANGULAR TOL	± 0.5°
4 PLACES	±
3 PLACES	±
2 PLACES	± 0.250
1 PLACE	± 0.50
0 PLACES	±

DRAFT WHERE APPLICABLE MUST REMAIN WITHIN DIMENSIONS

CURRENT REV DESC: REMOVED OBSOLETED PART NUMBER AS PER PCN#514494.

STATUS: Production
DRWN: Ravindra Reddy MS 2023-11-09
CHK'D: Ganesh Rao B 2023-12-20
APPR: Gurunandan GA 2023-12-20

molex

GIGABIT MAGNETIC JACK
POE PLUS ENABLED 2X4 LED

PRODUCT SALES DRAWING

DOCUMENT NUMBER	DOC TYPE	DOC PART	REVISION
SD-85735-101	PSD	001	C5

THIRD ANGLE PROJECTION	DRAWING	SERIES	MATERIAL NUMBER	CUSTOMER	SHEET NUMBER
	A2-SIZE	85735	SEE PN TABLE	GENERAL MARKET	2 OF 4

FORMAT: TC-dbprod-A2
REVISION: B
DATE: 2022/08/01

PRINTING
LED VERSION
P/N: 85735-XXXX
S/N: YYMMDD-CM-CONSECUTIVE NUMBER

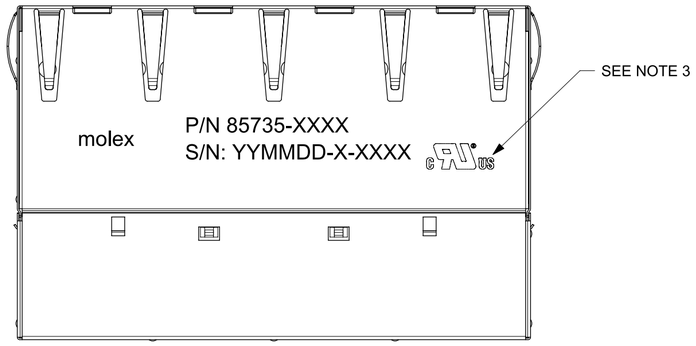

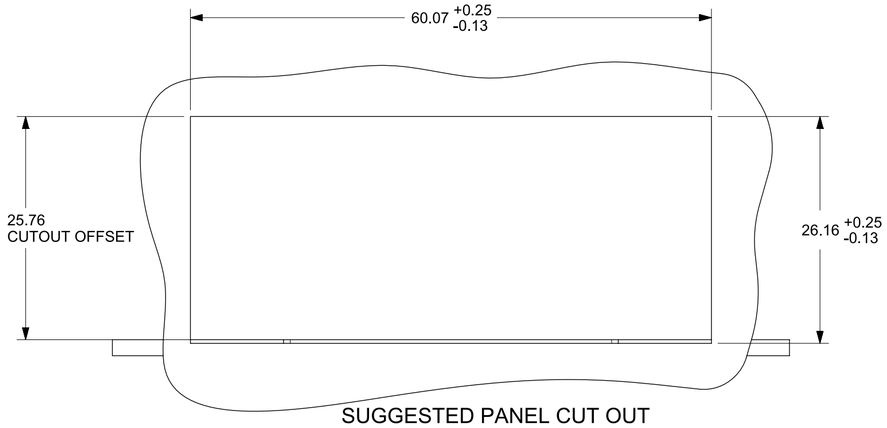

SUGGESTED PANEL CUT OUT

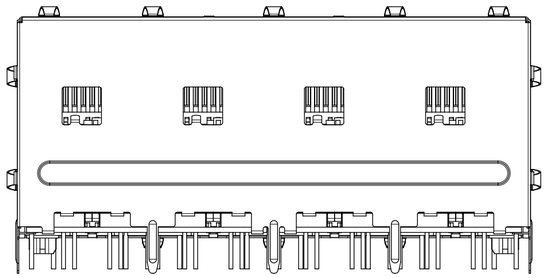

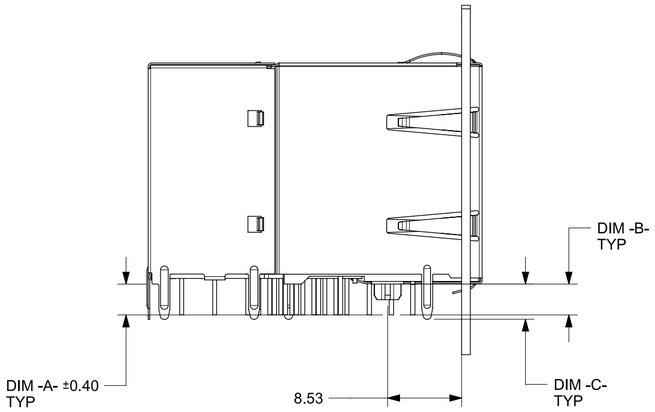

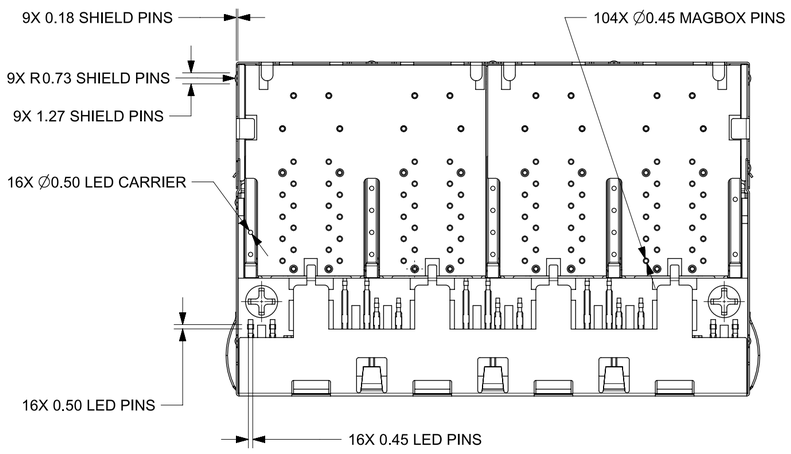

PART NUMBER	UPPER & LOWER LED LEFT		UPPER & LOWER LED RIGHT		DIM-A-SIGNAL PINS	DIM-B-LED PINS	DIM-C-SHIELD PINS
857351001	COLOUR 1	GREEN	COLOUR 1	GREEN	3,56mm	3,56mm	4.06mm
	COLOUR 2	-	COLOUR 2	-			
857351102	COLOUR 1	GREEN	COLOUR 1	YELLOW	2.40mm	2.40mm	2.40mm
	COLOUR 2	-	COLOUR 2				
857351002	COLOUR 1	GREEN	COLOUR 1	ORANGE	3,56mm	3,56mm	4.06mm
	COLOUR 2	-	COLOUR 2	-			
857351006	COLOUR 1	GREEN	COLOUR 1	YELLOW	3,56mm	3,56mm	4.06mm
	COLOUR 2	-	COLOUR 2	-			
857351008	COLOUR 1	GREEN	COLOUR 1	GREEN	3,56mm	3,56mm	4.06mm
	COLOUR 2	YELLOW	COLOUR 2	YELLOW			

ADDITIONAL LED COLOURS AND CONFIGURATIONS
ARE AVAILABLE ON REQUEST

NOTES:
1 - PRINTING MARKED BY LASER
2 - INSCRIPTION:
1st LINE: PART NUMBER
2nd LINE: DATE CODE (YEAR, MONTH, DAY) - MANUFACTURER ID - CONSECUTIVE NUMBER
3 - UL LOGO

THIS DRAWING CONTAINS INFORMATION THAT IS PROPRIETARY TO MOLEX ELECTRONIC TECHNOLOGIES, LLC AND SHOULD NOT BE USED WITHOUT WRITTEN PERMISSION

DIMENSION UNITS	mm
SCALE	2:1
GENERAL TOLERANCES (UNLESS SPECIFIED)	
ANGULAR TOL	± 0.5°
4 PLACES	±
3 PLACES	±
2 PLACES	± 0.250
1 PLACE	± 0.50
0 PLACES	±
DRAFT WHERE APPLICABLE MUST REMAIN WITHIN DIMENSIONS	

CURRENT REV DESC: REMOVED OBSOLETED PART NUMBER AS PER PCN#514494.

STATUS: Production
DRWN: Ravindra Reddy MS 2023-11-09
CHK'D: Ganesh Rao B 2023-12-20
APPR: Gurunandan GA 2023-12-20

THIRD ANGLE PROJECTION | DRAWING: A2-SIZE | SERIES: 85735

molex

GIGABIT MAGNETIC JACK
POE PLUS ENABLED 2X4 LED

PRODUCT SALES DRAWING

DOCUMENT NUMBER	DOC TYPE	DOC PART	REVISION
SD-85735-101	PSD	001	C5

MATERIAL NUMBER	CUSTOMER	SHEET NUMBER
SEE PN TABLE	GENERAL MARKET	3 OF 4

FORMAT: TC-tbprod-A2
REVISION: B
DATE: 2022/08/01

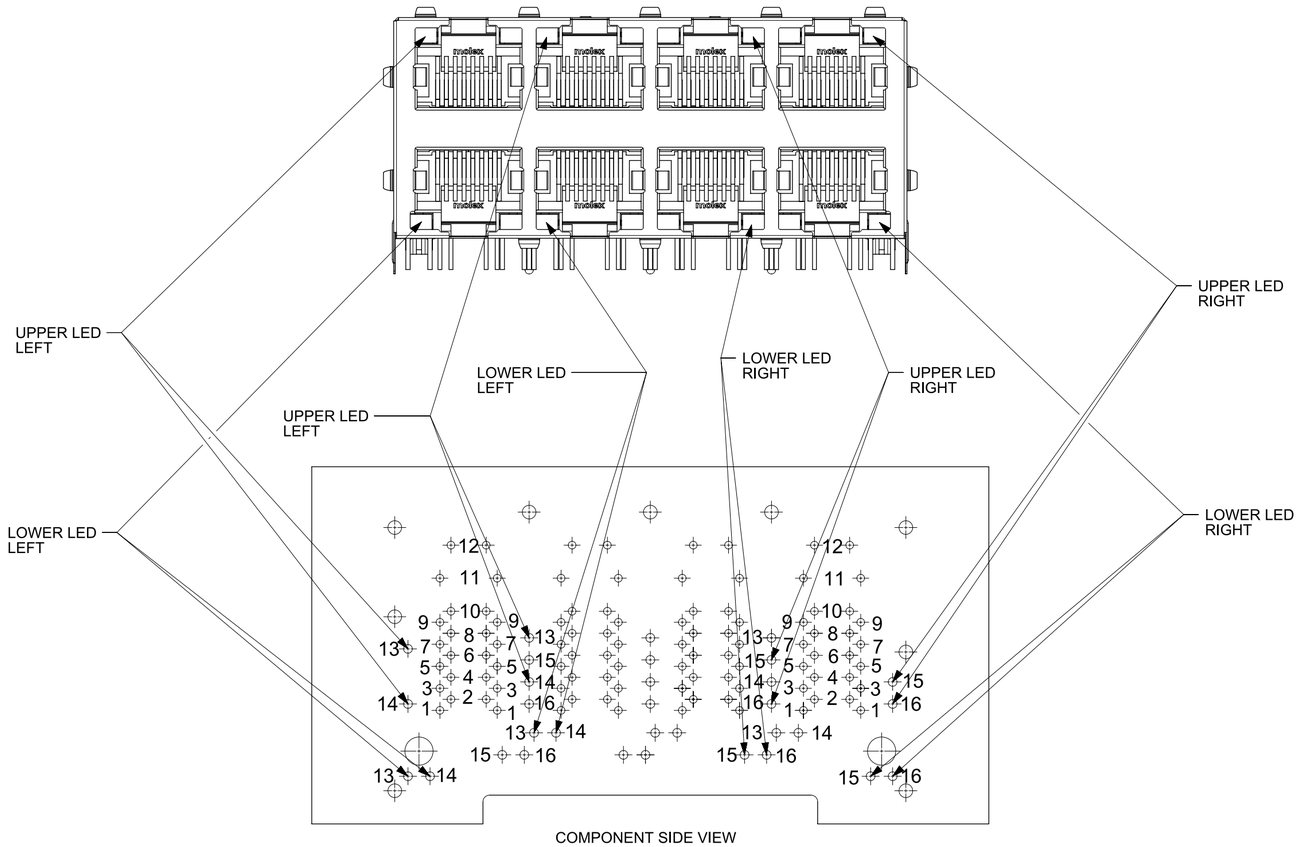

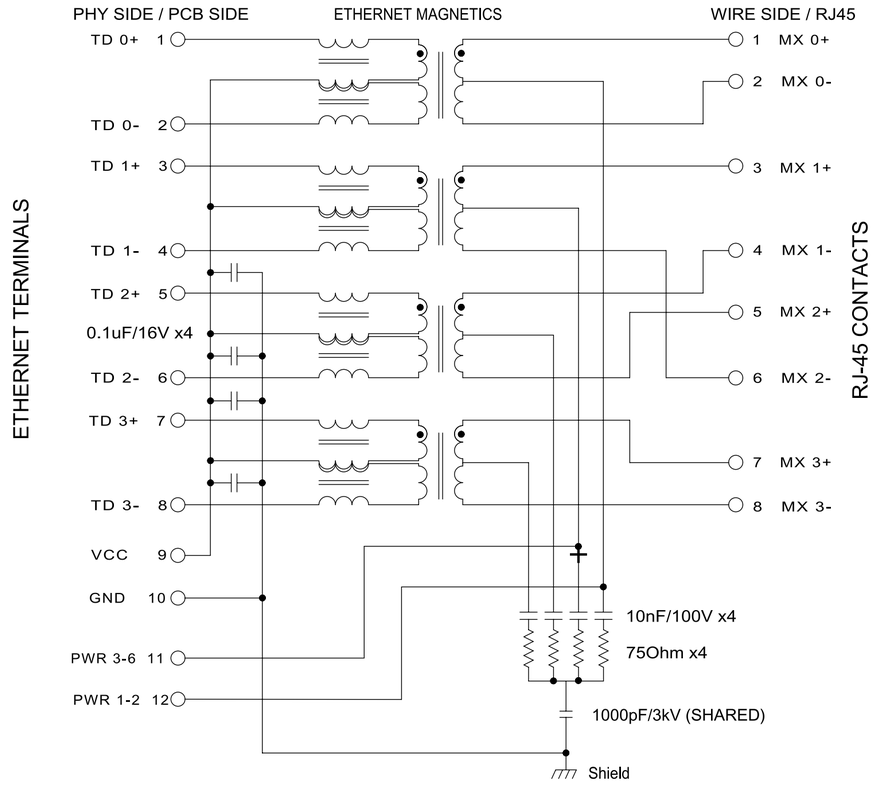

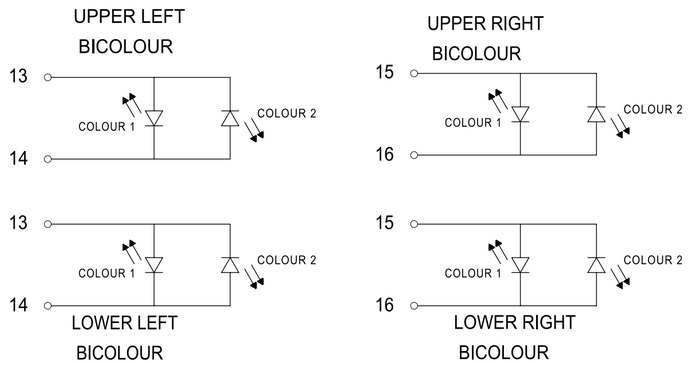

UPPER	LOWER	LEFT LED	
PIN POSITION	PIN POSITION	COLOUR 1	COLOUR 2
13	13	+	-
14	14	-	+

UPPER	LOWER	RIGHT LEFT	
PIN POSITION	PIN POSITION	COLOUR 1	COLOUR 2
15	15	+	-
16	16	-	+

PIN	ETHERNET MAGNETICS
1	TD 0+
2	TD 0-
3	TD 1+
4	TD 1-
5	TD 2+
6	TD 2-
7	TD 3+
8	TD 3-
9	Vcc
10	GND
11	PWR 3-6
12	PWR 1-2

POWER-SUPPLY POLARITY DEFINITION
TO ACHIEVE PoE POWER ASSIGNMENT
ACCORDING IEEE Std802.3-2012
ALTERNATIVE A:

	MDI-X	MDI
PIN 11	Vc +	Vc -
PIN 12	Vc -	Vc +

THIS DRAWING CONTAINS INFORMATION THAT IS PROPRIETARY TO MOLEX ELECTRONIC TECHNOLOGIES, LLC AND SHOULD NOT BE USED WITHOUT WRITTEN PERMISSION

DIMENSION UNITS: mm
SCALE: 2:1
GENERAL TOLERANCES (UNLESS SPECIFIED)
ANGULAR TOL ± 0.5°
4 PLACES ±
3 PLACES ±
2 PLACES ± 0.250
1 PLACE ± 0.50
0 PLACES ±
DRAFT WHERE APPLICABLE MUST REMAIN WITHIN DIMENSIONS

CURRENT REV DESC: REMOVED OBSOLETED PART NUMBER AS PER PCN#514494.

STATUS: Production
DRWN: Ravindra Reddy MS 2023-11-09
CHK'D: Ganesh Rao B 2023-12-20
APPR: Gurunandan GA 2023-12-20

THIRD ANGLE PROJECTION
DRAWING: A2-SIZE
SERIES: 85735
MATERIAL NUMBER: SEE PN TABLE
CUSTOMER: GENERAL MARKET
SHEET NUMBER: 4 OF 4

molex

GIGABIT MAGNETIC JACK
POE PLUS ENABLED 2X4 LED

PRODUCT SALES DRAWING

DOCUMENT NUMBER	DOC TYPE	DOC PART	REVISION
SD-85735-101	PSD	001	C5

FORMAT: TC+b+prod-A2
REVISION: B
DATE: 2022/08/01

GIGABIT 8 PORT MAGNETIC JACK WITH LED's
AND INTEGRATED POWER OVER ETHERNET TRANSFORMERS
WITHOUT POWER LINE CHOKE
ACCORDING TO IEEE Std802.3-2012 FOR PSE (30 WATT) APPLICATIONS

PART NUMBER	UPPER & LOWER LED LEFT		UPPER & LOWER LED RIGHT		LED PIN DIM-A-	SIGNAL PIN DIM-B-
85735-2001	COLOUR 1	GREEN	COLOUR 1	GREEN	3.56 MM	3.56 MM
	COLOUR 2	—	COLOUR 2	—		
85735-2004	COLOUR 1	GREEN	COLOUR 1	GREEN	3.56 MM	3.56 MM
	COLOUR 2	ORANGE	COLOUR 2	ORANGE		

ADDITIONAL LED COLOURS ARE CONFIGURATIONS AVAILABLE ON REQUEST

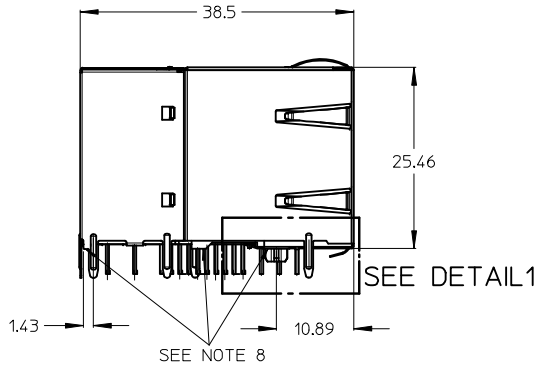

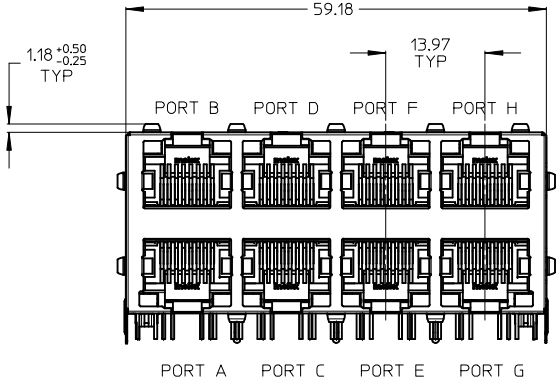

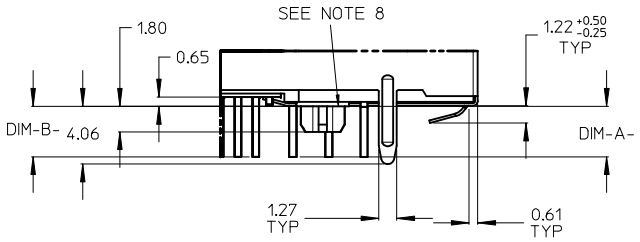

DETAIL1
SCALE 4:1

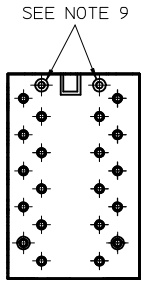

DETAIL-2
SCALE 4:1

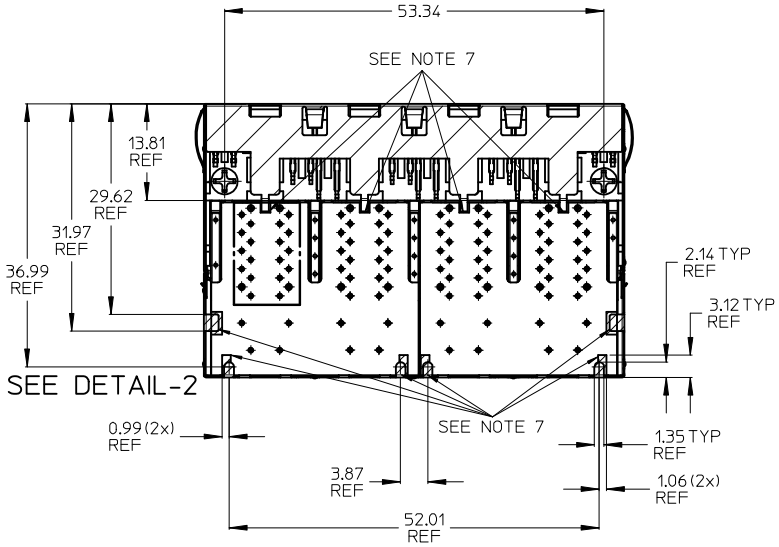

NOTES:
1 - SHIELD MATERIAL: BRASS; PLATING: NICKEL PRE-PLATING
2 - PLASTIC MATERIAL: POLYESTER (PBT) BLACK, 30%GR, UL 94V-0
3 - RJ45 TERMINALS MATERIAL: COPPER ALLOY
CONTACT PLATING: 0.76 MICROMETER GOLD OVER 1.9 MICROMETER NICKEL
PHY TERMINALS: TIN PLATED
4 - MATING INTERFACE ACCORDING TO IEC 60603-7
5 - PRODUCT SPECIFICATION: PS-85732-001
6 - PACKAGING SPECIFICATION: PK-85735-001
7 - TRACES WITHOUT INSULATION NOT ALLOWED IN THE DASHED AREAS & LATCHES (TO AVOID SHORTS TO SHIELD)
8 - STAND OFF TO SYSTEM BOARD
9 - STUBBED PINS -> AVOID TO ROUTE TRACES OR TO PLACE ANY VIAS OR PADS BELOW THESE PINS
10 - FOR MAGNETICS AND LED INFORMATION SEE SPEC PS-85732-001

INCH DIM DELETED
EC NO: DESCRIPTION
DRWN: JBADER 2015/01/15
CH'KD: MMANGARUDOV 2015/01/15
APPR: SSTEINKE 2015/07/08
REV: B

QUALITY SYMBOLS
▼=0
▽=0

GENERAL TOLERANCES (UNLESS SPECIFIED)	mm	INCH
4 PLACES	± ---	± ---
3 PLACES	± ---	± ---
2 PLACES	± 0.25	± ---
1 PLACE	± 0.5	± ---
ANGULAR ± .5 °		

DRAFT WHERE APPLICABLE MUST REMAIN WITHIN DIMENSIONS

DIMENSION STYLE	MM ONLY
SCALE	2:1
DESIGN UNITS	METRIC
	THIRD ANGLE PROJECTION
DRAWN BY / DATE	JBADER 2013/07/02
CHECKED BY / DATE	MMANGARUDOV 2013/07/02
APPROVED BY / DATE	SSTEINKE 2013/10/31
TITLE	GIGABIT MAGNETIC JACK POE PLUS ENABLED 2X4 LED
	MOLEX INCORPORATED
MATERIAL NO.	SEE BOM
DOCUMENT NO.	SD-85735-201
SHEET NO.	1 OF 4
SIZE	A2

THIS DRAWING CONTAINS INFORMATION THAT IS PROPRIETARY TO MOLEX INCORPORATED AND SHOULD NOT BE USED WITHOUT WRITTEN PERMISSION

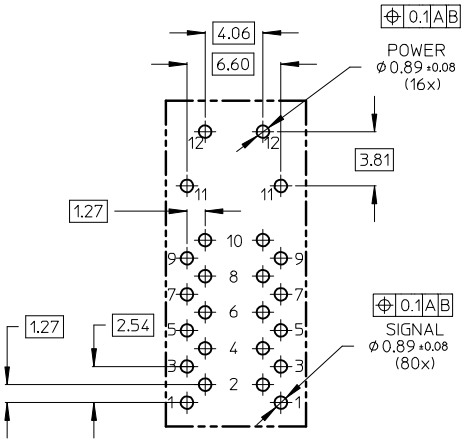

DETAIL3
SCALE 4:1

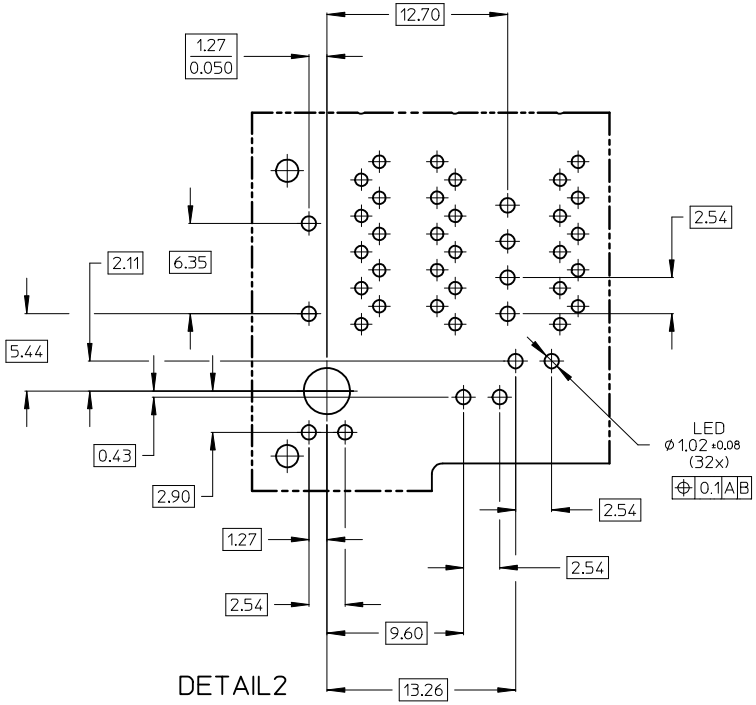

DETAIL2
SCALE 4:1

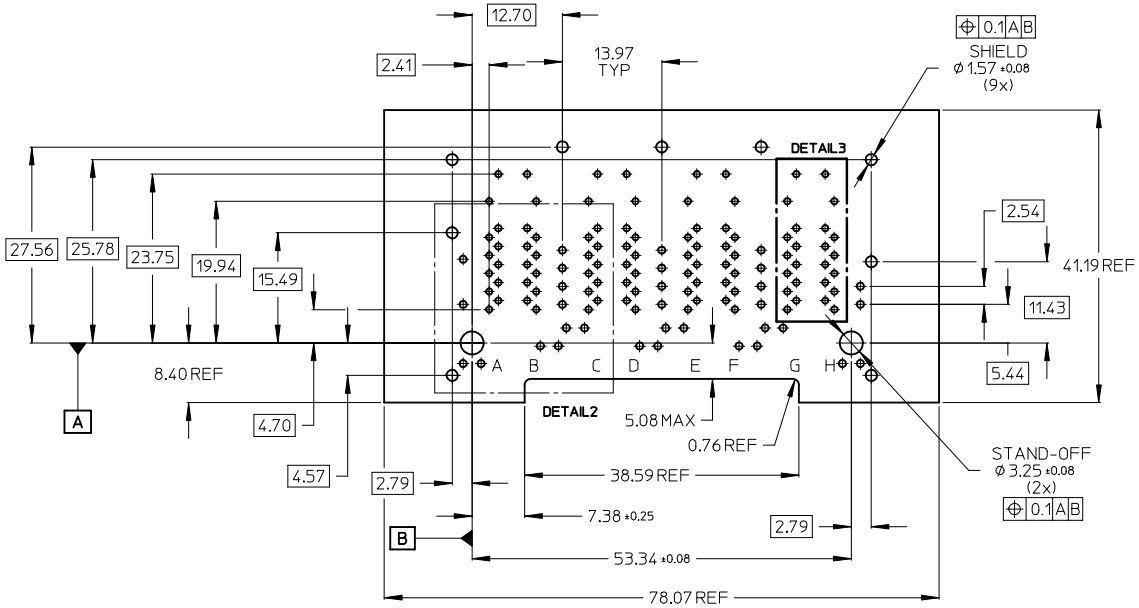

INCH DIM DELETED
EC NO: 2015/01/15
DRWN: JBADER 2015/01/15
CH'KD: MMANGARUDOV 2015/07/08
APPR: SSTEINKE
DESCRIPTION
REV B

QUALITY SYMBOLS
▼=0
▽=0

GENERAL TOLERANCES (UNLESS SPECIFIED)	mm	INCH
4 PLACES	± ---	± ---
3 PLACES	± ---	± ---
2 PLACES	± 0.25	± ---
1 PLACE	± 0.5	± ---
ANGULAR ± .5 °		

DRAFT WHERE APPLICABLE MUST REMAIN WITHIN DIMENSIONS

DIMENSION STYLE	MM ONLY
SCALE	2:1
DESIGN UNITS	METRIC
	THIRD ANGLE PROJECTION
DRAWN BY	JBADER
DATE	2013/07/02
CHECKED BY	MMANGARUDOV
DATE	2013/07/02
APPROVED BY	SSTEINKE
DATE	2013/10/31
MATERIAL NO.	SEE SHEET 1
SIZE	A2

TITLE
GIGABIT MAGNETIC JACK
POE PLUS ENABLED 2X4 LED

molex MOLEX INCORPORATED

DOCUMENT NO. SD-85735-201
SHEET NO. 2 OF 4

THIS DRAWING CONTAINS INFORMATION THAT IS PROPRIETARY TO MOLEX INCORPORATED AND SHOULD NOT BE USED WITHOUT WRITTEN PERMISSION

PRINTING

LED VERSION

P/N: 85735-XXXX
S/N: YYMMDD-CM-CONSECUTIVE NUMBER

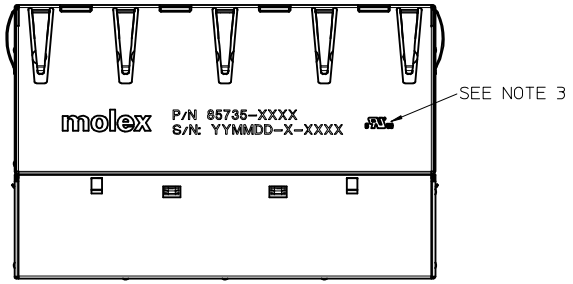

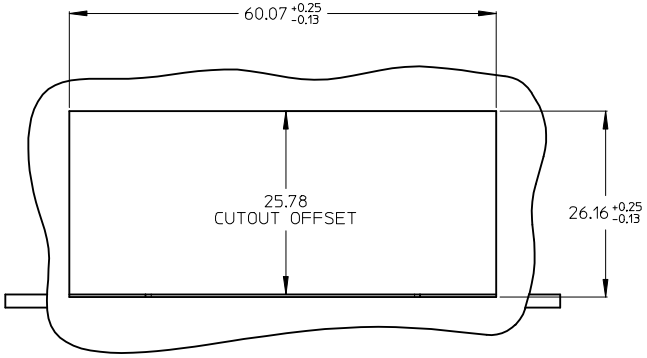

SUGGESTED PANEL CUT OUT

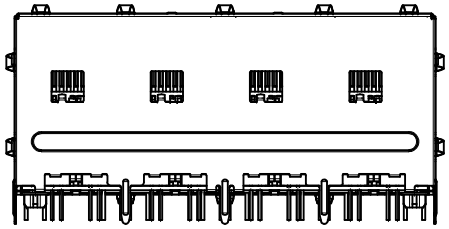

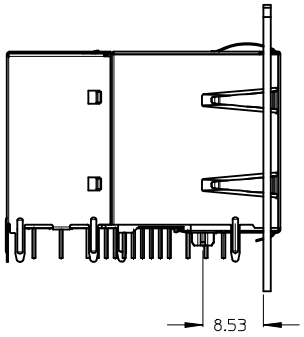

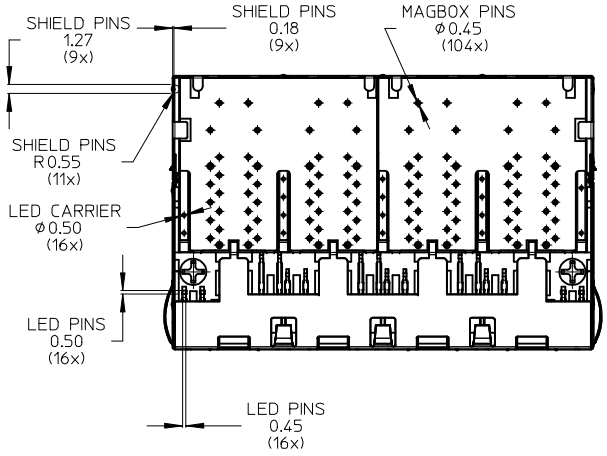

NOTES:

1 - PRINTING MARKED BY LASER

2 - INSCRIPTION:

1st LINE: PART NUMBER

2nd LINE: DATE CODE (YEAR, MONTH, DAY)- MANUFACTURER ID - CONSECUTIVE NUMBER

3 - UL LOGO

INCH DIM DELETED
EC NO:
DRWN:JBADER 2015/01/15
CH'KD:MMANGARUDOV 2015/01/15
APPR:SSTEINKE 2015/07/08
DESCRIPTION
REV B

QUALITY SYMBOLS
▼=0
▽=0

GENERAL TOLERANCES (UNLESS SPECIFIED)

	mm	INCH
4 PLACES	± ---	± ---
3 PLACES	± ---	± ---
2 PLACES	± 0.25	± ---
1 PLACE	± 0.5	± ---
ANGULAR ± .5 °		

DRAFT WHERE APPLICABLE MUST REMAIN WITHIN DIMENSIONS

DIMENSION STYLE: MM ONLY
SCALE: 2:1
DESIGN UNITS: METRIC
THIRD ANGLE PROJECTION

DRAWN BY: JBADER DATE: 2013/07/02
CHECKED BY: MMANGARUDOV DATE: 2013/07/02
APPROVED BY: SSTEINKE DATE: 2013/10/31
MATERIAL NO.: SEE SHEET 1

TITLE: GIGABIT MAGNETIC JACK
POE PLUS ENABLED 2X4 LED

MOLEX INCORPORATED

DOCUMENT NO.: SD-85735-201
SHEET NO.: 3 OF 4

SIZE: A2

THIS DRAWING CONTAINS INFORMATION THAT IS PROPRIETARY TO MOLEX INCORPORATED AND SHOULD NOT BE USED WITHOUT WRITTEN PERMISSION

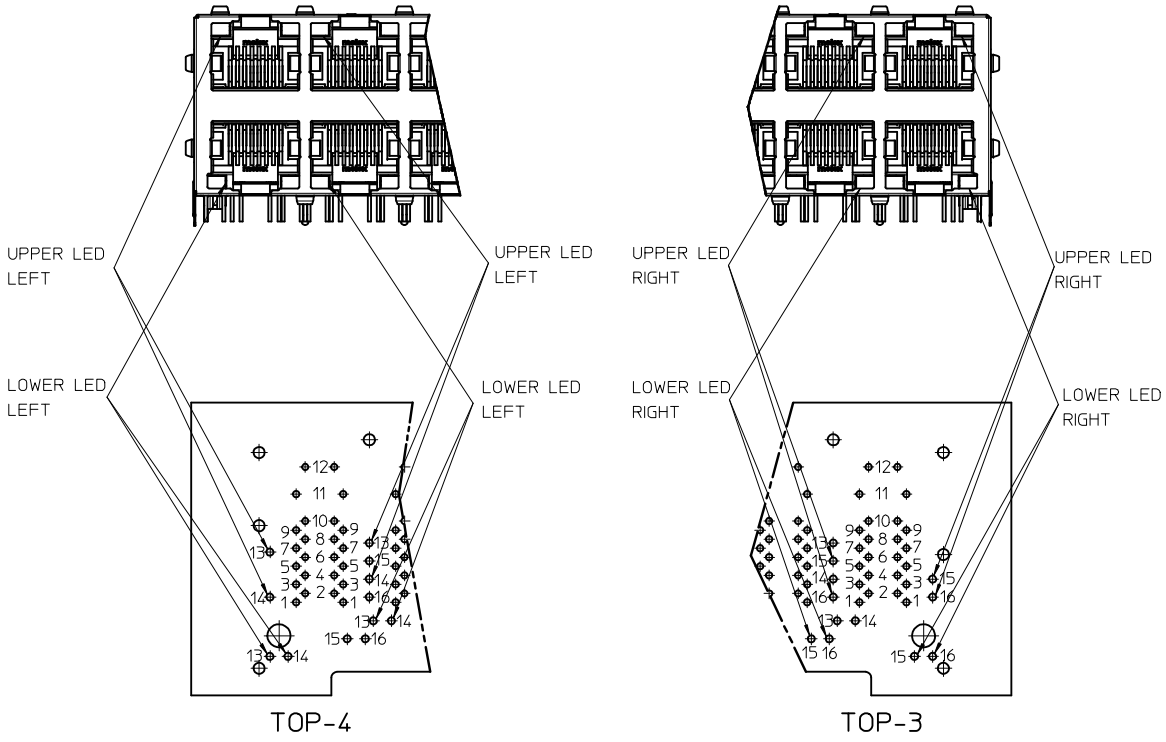

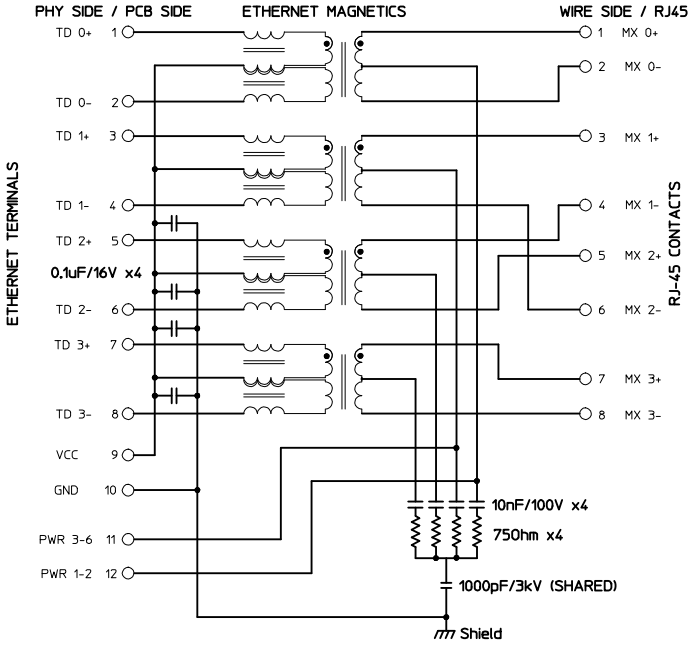

PIN	ETHERNET MAGNETICS
1	TD 0+
2	TD 0-
3	TD 1+
4	TD 1-
5	TD 2+
6	TD 2-
7	TD 3+
8	TD 3-
9	Vcc
10	GND
11	PWR 3-6
12	PWR 1-2

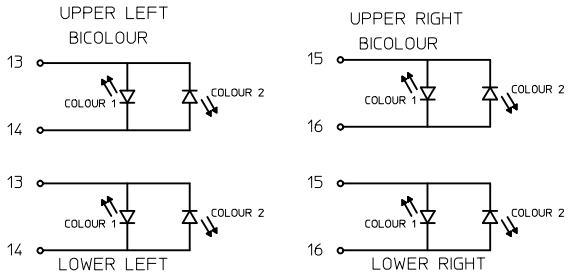

UPPER PIN POSITION	LOWER PIN POSITION	LEFT LED COLOUR 1	LEFT LED COLOUR 2
13	13	+	-
14	14	-	+

UPPER PIN POSITION	LOWER PIN POSITION	RIGHT LED COLOUR 1	RIGHT LED COLOUR 2
15	15	+	-
16	16	-	+

POWER-SUPPLY POLARITY DEFINITION
TO ACHIEVE PoE POWER ASSIGNMENT
ACCORDING IEEE Std802.3-2012
ALTERNATIVE A:

	MDI-X	MDI
PIN 11	Vc +	Vc -
PIN 12	Vc -	Vc +

SCHEMATIC UPDATED
EC NO: DRWN:JBADER 2015/01/15
CH'KD:MMANGARUDOV 2015/01/15
APPR:SSTEINKE 2015/07/08
DESCRIPTION
REV B

QUALITY SYMBOLS
▼=0
▽=0

GENERAL TOLERANCES (UNLESS SPECIFIED)

	mm	INCH
4 PLACES	± ---	± ---
3 PLACES	± ---	± ---
2 PLACES	± 0.25	± ---
1 PLACE	± 0.5	± ---
ANGULAR ± .5 °		

DRAFT WHERE APPLICABLE MUST REMAIN WITHIN DIMENSIONS

DIMENSION STYLE: MM ONLY
SCALE: 2:1
DESIGN UNITS: METRIC
THIRD ANGLE PROJECTION

DRAWN BY: JBADER DATE: 2013/07/02
CHECKED BY: MMANGARUDOV DATE: 2013/07/02
APPROVED BY: SSTEINKE DATE: 2013/10/31
MATERIAL NO.: SEE SHEET 1

TITLE: GIGABIT MAGNETIC JACK
POE PLUS ENABLED 2X4 LED

MOLEX INCORPORATED

DOCUMENT NO.: SD-85735-201
SHEET NO.: 4 OF 4
SIZE: A2

THIS DRAWING CONTAINS INFORMATION THAT IS PROPRIETARY TO MOLEX INCORPORATED AND SHOULD NOT BE USED WITHOUT WRITTEN PERMISSION