| NO. CKTS | DIM. A | DIM. B |
|---|---|---|
| 2 | 5.08<br>.200 | 2.54<br>.100 |
| 3 | 7.62<br>.300 | 5.08<br>.200 |
| 4 | 10.16<br>.400 | 7.62<br>.300 |
| 5 | 12.70<br>.500 | 10.16<br>.400 |
| 6 | 15.24<br>.600 | 12.70<br>.500 |
| 7 | 17.78<br>.700 | 15.24<br>.600 |
| 8 | 20.32<br>.800 | 17.78<br>.700 |
| 9 | 22.86<br>.900 | 20.32<br>.800 |
| 10 | 25.40<br>1.000 | 22.86<br>.900 |
| 11 | 27.94<br>1.100 | 25.40<br>1.000 |
| 12 | 30.48<br>1.200 | 27.94<br>1.100 |
| 13 | 33.02<br>1.300 | 30.48<br>1.200 |
| 14 | 35.56<br>1.400 | 33.02<br>1.300 |
| 15 | 38.10<br>1.500 | 35.56<br>1.400 |
| 16 | 40.64<br>1.600 | 38.10<br>1.500 |
| 17 | 43.18<br>1.700 | 40.64<br>1.600 |
| 18 | 45.72<br>1.800 | 43.18<br>1.700 |
| 19 | 48.26<br>1.900 | 45.72<br>1.800 |
| 20 | 50.80<br>2.000 | 48.26<br>1.900 |
| 21 | 53.34<br>2.100 | 50.80<br>2.000 |
| 22 | 55.88<br>2.200 | 53.34<br>2.100 |
| 23 | 58.42<br>2.300 | 55.88<br>2.200 |
| 24 | 60.96<br>2.400 | 58.42<br>2.300 |
| 25 | 63.50<br>2.500 | 60.96<br>2.400 |
| 26 | 66.04<br>2.600 | 63.50<br>2.500 |
| 27 | 68.58<br>2.700 | 66.04<br>2.600 |
| 28 | 71.12<br>2.800 | 68.58<br>2.700 |
| 29 | 73.66<br>2.900 | 71.12<br>2.800 |
| 30 | 76.20<br>3.000 | 73.66<br>2.900 |
| 31 | 78.74<br>3.100 | 76.20<br>3.000 |
| 32 | 81.28<br>3.200 | 78.74<br>3.100 |
| 33 | 83.82<br>3.300 | 81.28<br>3.200 |
| 34 | 86.36<br>3.400 | 83.82<br>3.300 |
| 35 | 88.90<br>3.500 | 86.36<br>3.400 |
| 36 | 91.44<br>3.600 | 88.90<br>3.500 |

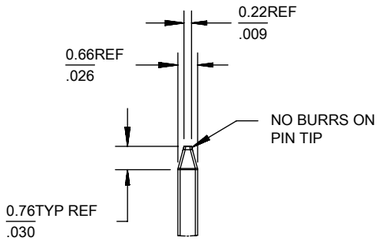


DETAIL X
SCALE 5:1
SEE NOTE 10

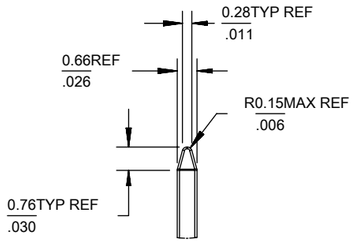


DETAIL Y
SCALE 5:1
SEE NOTE 10

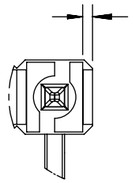


DETAIL Z
SCALE 5:1

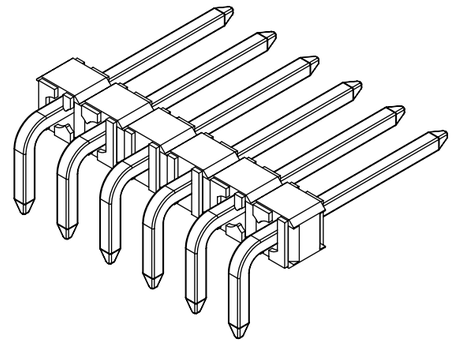

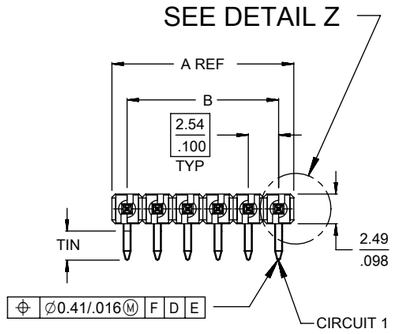


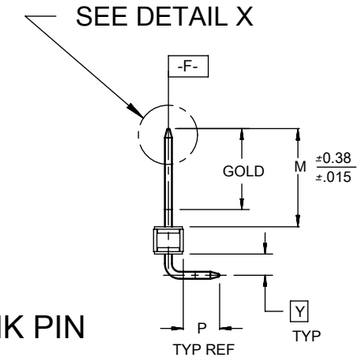




OPTIONAL KINK PIN
SEE NOTE 7

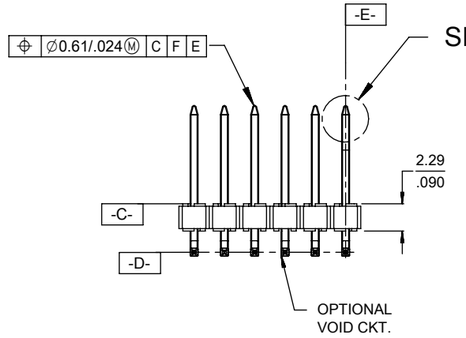


NOTES:
1. MATERIAL: GLASS FILLED NYLON
   UL94V-0, COLOR: BLACK
2. FINISH:
   (154) OVERALL TIN: 0.00254/.000100 MIN. OVER
   NICKEL: 0.00127/.000050 MIN.
   (208) SELECT GOLD: 0.00038/.000015 MIN,
   SELECT TIN: 0.00254/.000100 MIN,
   WITH OVERALL NICKEL UNDERPLATE: 0.00127/.000050 MIN.
   (228) SELECT GOLD: 0.00076/.000030 MIN,
   SELECT TIN: 0.00254/.000100 MIN,
   WITH OVERALL NICKEL UNDERPLATE: 0.00127/.000050 MIN.
3. PRODUCT SPECIFICATION: PS 10-07.
4. PACKAGING INFORMATION: SEE TABLES
5. SOLDERABILITY PER SMES-152.
6. PIN PUSH OUT FORCE: 3 LBS. MIN
7. KINK PIN OPTION NOT RECOMMENDED FOR 2 CIRCUIT PARTS.
   HOLE SIZE MAY NEED TO BE ADJUSTED FOR 2 CIRCUIT PARTS
   WITH KINK OPTION FOR PROPER INSERTION INTO THE PCB.
   SEE SMES-42003 FOR ADDITIONAL INFORMATION
   ON KINK PIN DIRECTION AND PLACEMENT.
8. HEADERS ARE NOT STACKABLE ON 2.54/.100 CENTERS.
9. THIS PART CONFORMS TO CLASS B REQUIREMENTS OF
   COSMETIC SPECIFICATION PS-45499-002.
10. PIN TIP DIMENSIONS ARE SHOWN FOR REFERENCE ONLY.
    DIMENSIONS APPLY PRIOR TO PLATING OR ASSEMBLY.

| 2-* | Y |
|---|---|
| 1 | Y |
| SHEET | REV |

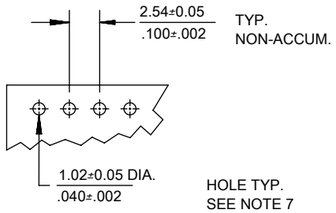


TYP. HOLE PATTERN
FOR 1.57/.062 THK. PCB

| DOCUMENT STATUS | P1 | RELEASE DATE | 2024/10/25 14:08:54 |
|---|---|---|---|

FORMAT: Eng-lega-master-tb-prod-B
REVISION: E
DATE: 2020/01/14

THIS DRAWING CONTAINS INFORMATION THAT IS PROPRIETARY TO MOLEX ELECTRONIC TECHNOLOGIES, LLC AND SHOULD NOT BE USED WITHOUT WRITTEN PERMISSION

FUNCTIONAL SYMBOLS
(EA) = 0
(EC) = 0
(EP) = 0
DIVISIONAL SYMBOLS

DIMENSION UNITS: mm
SCALE: 1:1

GENERAL TOLERANCES (UNLESS SPECIFIED)

| | MM | INCH |
|---|---|---|
| 4 PLACES | ± | ± |
| 3 PLACES | ± | ± 0.01 |
| 2 PLACES | ± 0.25 | ± 0.015 |
| 1 PLACE | ± 0.38 | ± |
| 0 PLACES | ± | ± |
| ANGULAR TOL | ± ° | |

DRAFT WHERE APPLICABLE MUST REMAIN WITHIN DIMENSIONS

CURRENT REV DESC:

EC NO: 802440
DRWN: MANOJA7 2024/07/31
CHK'D: ISHWARG 2024/10/25
APPR: ISHWARG 2024/10/25

INITIAL REVISION:
DRWN: JSCHAFER 11/24/03
APPR: MARGULIS 11/24/03

THIRD ANGLE PROJECTION | DRAWING: B-SIZE | SERIES: 42377

molex

KK 100 HEADER ASSEMBLY
FLAT RIGHT ANGLE BREAKAWAY

PRODUCT CUSTOMER DRAWING

| DOCUMENT NUMBER | DOC TYPE | DOC PART | REVISION |
|---|---|---|---|
| SD-42377-001 | PSD | 000 | Y2 |

| MATERIAL NUMBER | CUSTOMER | SHEET NUMBER |
|---|---|---|
| SEE CHART | GENERAL MARKET | 1 OF 1 |

| ✓ A-42377-0002 / 0036 | |
|---|---|
| HEADER NUMBER: | 42312-0036 |
| PIN NUMBER: | 42663-AZA154 |
| PIN LENGTH: L | .550/13.97 |
| MATING LENGTH: M | .244/6.20 |
| GOLD POINT: G | N/A |
| PI N HEIGHT: Y | .070/1.78 |
| PC TAIL LENGTH: P | .120/3.05 |
| TIN: T | OVERALL |
| CKTS: | 2-36 |
| KINKS: | NONE |
| REMOVED BACKWALLS: | NONE |
| VOIDED CKTS: | NONE |
| PACKAGING: | BULK PK-40873-0041 |

| CKTS | MATERIAL NUMBER | ENG NUMBER | CKTS | MATERIAL NUMBER | ENG NUMBER |
|---|---|---|---|---|---|
| 02 | 22-28-8020 | 42377-0002 | 20 | 22-28-8200 | 42377-0020 |
| 03 | 22-28-8030 | 42377-0003 | 21 | 22-28-8210 | 42377-0021 |
| 04 | 22-28-8040 | 42377-0004 | 22 | 22-28-8220 | 42377-0022 |
| 05 | 22-28-8050 | 42377-0005 | 23 | 22-28-8230 | 42377-0023 |
| 06 | 22-28-8060 | 42377-0006 | 24 | 22-28-8240 | 42377-0024 |
| 07 | 22-28-8070 | 42377-0007 | 25 | 22-28-8250 | 42377-0025 |
| 08 | 22-28-8080 | 42377-0008 | 26 | 22-28-8260 | 42377-0026 |
| 09 | 22-28-8090 | 42377-0009 | 27 | 22-28-8270 | 42377-0027 |
| 10 | 22-28-8100 | 42377-0010 | 28 | 22-28-8280 | 42377-0028 |
| 11 | 22-28-8110 | 42377-0011 | 29 | 22-28-8290 | 42377-0029 |
| 12 | 22-28-8120 | 42377-0012 | 30 | 22-28-8300 | 42377-0030 |
| 13 | 22-28-8130 | 42377-0013 | 31 | 22-28-8310 | 42377-0031 |
| 14 | 22-28-8140 | 42377-0014 | 32 | 22-28-8320 | 42377-0032 |
| 15 | 22-28-8150 | 42377-0015 | 33 | 22-28-8330 | 42377-0033 |
| 16 | 22-28-8160 | 42377-0016 | 34 | 22-28-8340 | 42377-0034 |
| 17 | 22-28-8170 | 42377-0017 | 35 | 22-28-8350 | 42377-0035 |
| 18 | 22-28-8180 | 42377-0018 | 36 | 22-28-8360 | 42377-0036 |
| 19 | 22-28-8190 | 42377-0019 | | | |

| ✓ A-42377-0037 / 0071 | |
|---|---|
| HEADER NUMBER: | 42312-0036 |
| PIN NUMBER: | 42663-BSA154 |
| PIN LENGTH: L | .640/16.00 |
| MATING LENGTH: M | .324/8.23 |
| GOLD POINT: G | N/A |
| PI N HEIGHT: Y | .070/1.78 |
| PC TAIL LENGTH: P | .120/3.05 |
| TIN: T | OVERALL |
| CKTS: | 2-36 |
| KINKS: | NONE |
| REMOVED BACKWALLS: | NONE |
| VOIDED CKTS: | NONE |
| PACKAGING: | BULK PK-40873-0041 |

| CKTS | MATERIAL NUMBER | ENG NUMBER | CKTS | MATERIAL NUMBER | ENG NUMBER |
|---|---|---|---|---|---|
| 02 | 22-28-8021 | 42377-0037 | 20 | 22-28-8201 | 42377-0055 |
| 03 | 22-28-8031 | 42377-0038 | 21 | 22-28-8211 | 42377-0056 |
| 04 | 22-28-8041 | 42377-0039 | 22 | 22-28-8221 | 42377-0057 |
| 05 | 22-28-8051 | 42377-0040 | 23 | 22-28-8231 | 42377-0058 |
| 06 | 22-28-8061 | 42377-0041 | 24 | 22-28-8241 | 42377-0059 |
| 07 | 22-28-8071 | 42377-0042 | 25 | 22-28-8251 | 42377-0060 |
| 08 | 22-28-8081 | 42377-0043 | 26 | 22-28-8261 | 42377-0061 |
| 09 | 22-28-8091 | 42377-0044 | 27 | 22-28-8271 | 42377-0062 |
| 10 | 22-28-8101 | 42377-0045 | 28 | 22-28-8281 | 42377-0063 |
| 11 | 22-28-8111 | 42377-0046 | 29 | 22-28-8291 | 42377-0064 |
| 12 | 22-28-8121 | 42377-0047 | 30 | 22-28-8301 | 42377-0065 |
| 13 | 22-28-8131 | 42377-0048 | 31 | 22-28-8311 | 42377-0066 |
| 14 | 22-28-8141 | 42377-0049 | 32 | 22-28-8321 | 42377-0067 |
| 15 | 22-28-8151 | 42377-0050 | 33 | 22-28-8331 | 42377-0068 |
| 16 | 22-28-8161 | 42377-0051 | 34 | 22-28-8341 | 42377-0069 |
| 17 | 22-28-8171 | 42377-0052 | 35 | 22-28-8351 | 42377-0070 |
| 18 | 22-28-8181 | 42377-0053 | 36 | 22-28-8361 | 42377-0071 |
| 19 | 22-28-8191 | 42377-0054 | | | |

| REV: | ECM INFORMATION: | TITLE: | SHEET No. |
|---|---|---|---|
| **Y2** | ECM No: **107985**<br>DATE: **10/25/2024** | **KK 100 HEADER ASSEMBLY**<br>**FLAT RIGHT ANGLE**<br>**BREAKAWAY** | **- 2 -** |

| DOCUMENT NUMBER: | CREATED / REVISED BY: | CHECKED BY: | APPROVED BY: |
|---|---|---|---|
| **SD- 42377-001** | **BAPPELDORN** | **MKIPPER** | **FSMITH** |

| ✓ A-42377-0072 / 0106 | |
|---|---|
| HEADER NUMBER: | 42312-0036 |
| PIN NUMBER: | 42663-AZB208 |
| PIN LENGTH: L | .550/13.97 |
| MATING LENGTH: M | .244/6.20 |
| GOLD POINT: G | .140/3.56 |
| PIN HEIGHT: Y | .070/1.78 |
| PC TAIL LENGTH: P | .120/3.05 |
| TIN: T | .135/3.43 |
| CKTS: | 2-36 |
| KINKS: | NONE |
| REMOVED BACKWALLS: | NONE |
| VOIDED CKTS: | NONE |
| PACKAGING: | BULK PK-40873-0041 |

| CKTS | MATERIAL NUMBER | ENG NUMBER | CKTS | MATERIAL NUMBER | ENG NUMBER |
|---|---|---|---|---|---|
| 02 | 22-28-8022 | 42377-0072 | 20 | 22-28-8202 | 42377-0090 |
| 03 | 22-28-8032 | 42377-0073 | 21 | 22-28-8212 | 42377-0091 |
| 04 | 22-28-8042 | 42377-0074 | 22 | 22-28-8222 | 42377-0092 |
| 05 | 22-28-8052 | 42377-0075 | 23 | 22-28-8232 | 42377-0093 |
| 06 | 22-28-8062 | 42377-0076 | 24 | 22-28-8242 | 42377-0094 |
| 07 | 22-28-8072 | 42377-0077 | 25 | 22-28-8252 | 42377-0095 |
| 08 | 22-28-8082 | 42377-0078 | 26 | 22-28-8262 | 42377-0096 |
| 09 | 22-28-8092 | 42377-0079 | 27 | 22-28-8272 | 42377-0097 |
| 10 | 22-28-8102 | 42377-0080 | 28 | 22-28-8282 | 42377-0098 |
| 11 | 22-28-8112 | 42377-0081 | 29 | 22-28-8292 | 42377-0099 |
| 12 | 22-28-8122 | 42377-0082 | 30 | 22-28-8302 | 42377-0100 |
| 13 | 22-28-8132 | 42377-0083 | 31 | 22-28-8312 | 42377-0101 |
| 14 | 22-28-8142 | 42377-0084 | 32 | 22-28-8322 | 42377-0102 |
| 15 | 22-28-8152 | 42377-0085 | 33 | 22-28-8332 | 42377-0103 |
| 16 | 22-28-8162 | 42377-0086 | 34 | 22-28-8342 | 42377-0104 |
| 17 | 22-28-8172 | 42377-0087 | 35 | 22-28-8352 | 42377-0105 |
| 18 | 22-28-8182 | 42377-0088 | 36 | 22-28-8362 | 42377-0106 |
| 19 | 22-28-8192 | 42377-0089 | | | |

| ✓ A-42377-0107 / 0141 | |
|---|---|
| HEADER NUMBER: | 42312-0036 |
| PIN NUMBER: | 42663-BSB208 |
| PIN LENGTH: L | .630/16.00 |
| MATING LENGTH: M | .324/8.23 |
| GOLD POINT: G | .140/3.56 MIN |
| PIN HEIGHT: Y | .070/1.78 |
| PC TAIL LENGTH: P | .120/3.05 |
| TIN: T | .135/3.43 |
| CKTS: | 2-36 |
| KINKS: | NONE |
| REMOVED BACKWALLS: | NONE |
| VOIDED CKTS: | NONE |
| PACKAGING: | BULK PK-40873-0041 |

| CKTS | MATERIAL NUMBER | ENG NUMBER | CKTS | MATERIAL NUMBER | ENG NUMBER |
|---|---|---|---|---|---|
| 02 | 22-28-8023 | 42377-0107 | 20 | 22-28-8203 | 42377-0125 |
| 03 | 22-28-8033 | 42377-0108 | 21 | 22-28-8213 | 42377-0126 |
| 04 | 22-28-8043 | 42377-0109 | 22 | 22-28-8223 | 42377-0127 |
| 05 | 22-28-8053 | 42377-0110 | 23 | 22-28-8233 | 42377-0128 |
| 06 | 22-28-8063 | 42377-0111 | 24 | 22-28-8243 | 42377-0129 |
| 07 | 22-28-8073 | 42377-0112 | 25 | 22-28-8253 | 42377-0130 |
| 08 | 22-28-8083 | 42377-0113 | 26 | 22-28-8263 | 42377-0131 |
| 09 | 22-28-8093 | 42377-0114 | 27 | 22-28-8273 | 42377-0132 |
| 10 | 22-28-8103 | 42377-0115 | 28 | 22-28-8283 | 42377-0133 |
| 11 | 22-28-8113 | 42377-0116 | 29 | 22-28-8293 | 42377-0134 |
| 12 | 22-28-8123 | 42377-0117 | 30 | 22-28-8303 | 42377-0135 |
| 13 | 22-28-8133 | 42377-0118 | 31 | 22-28-8313 | 42377-0136 |
| 14 | 22-28-8143 | 42377-0119 | 32 | 22-28-8323 | 42377-0137 |
| 15 | 22-28-8153 | 42377-0120 | 33 | 22-28-8333 | 42377-0138 |
| 16 | 22-28-8163 | 42377-0121 | 34 | 22-28-8343 | 42377-0139 |
| 17 | 22-28-8173 | 42377-0122 | 35 | 22-28-8353 | 42377-0140 |
| 18 | 22-28-8183 | 42377-0123 | 36 | 22-28-8363 | 42377-0141 |
| 19 | 22-28-8193 | 42377-0124 | | | |

| REV: | ECM INFORMATION: | TITLE: | SHEET No. |
|---|---|---|---|
| **Y2** | ECM No: **107985**<br>DATE: **10/25/2024** | **KK 100 HEADER ASSEMBLY<br>FLAT RIGHT ANGLE<br>BREAKAWAY** | **- 3 -** |

| DOCUMENT NUMBER: | CREATED / REVISED BY: | CHECKED BY: | APPROVED BY: |
|---|---|---|---|
| **SD- 42377-001** | **BAPPELDORN** | **MKIPPER** | **FSMITH** |

| ✓ A-42377-0142 / 0176 | |
|---|---|
| HEADER NUMBER: | 42312-0036 |
| PIN NUMBER: | 42663-BCA154 |
| PIN LENGTH: L | .565/14.35 |
| MATING LENGTH: M | .244/6.20 |
| GOLD POINT: G | N/A |
| PIN HEIGHT: Y | .070/1.78 |
| PC TAIL LENGTH: P | .135/3.43. |
| TIN: T | OVERALL |
| CKTS: | 2-36 |
| KINKS: | PER SMES-42003 |
| REMOVED BACKWALLS: | NONE |
| VOIDED CKTS: | NONE |
| PACKAGING: | BULK PK-40873-0041 |

| CKTS | MATERIAL NUMBER | ENG NUMBER | CKTS | MATERIAL NUMBER | ENG NUMBER |
|---|---|---|---|---|---|
| 02 | 22-28-9020 | 42377-0142 | 20 | 22-28-9200 | 42377-0160 |
| 03 | 22-28-9030 | 42377-0143 | 21 | 22-28-9210 | 42377-0161 |
| 04 | 22-28-9040 | 42377-0144 | 22 | 22-28-9220 | 42377-0162 |
| 05 | 22-28-9050 | 42377-0145 | 23 | 22-28-9230 | 42377-0163 |
| 06 | 22-28-9060 | 42377-0146 | 24 | 22-28-9240 | 42377-0164 |
| 07 | 22-28-9070 | 42377-0147 | 25 | 22-28-9250 | 42377-0165 |
| 08 | 22-28-9080 | 42377-0148 | 26 | 22-28-9260 | 42377-0166 |
| 09 | 22-28-9090 | 42377-0149 | 27 | 22-28-9270 | 42377-0167 |
| 10 | 22-28-9100 | 42377-0150 | 28 | 22-28-9280 | 42377-0168 |
| 11 | 22-28-9110 | 42377-0151 | 29 | 22-28-9290 | 42377-0169 |
| 12 | 22-28-9120 | 42377-0152 | 30 | 22-28-9300 | 42377-0170 |
| 13 | 22-28-9130 | 42377-0153 | 31 | 22-28-9310 | 42377-0171 |
| 14 | 22-28-9140 | 42377-0154 | 32 | 22-28-9320 | 42377-0172 |
| 15 | 22-28-9150 | 42377-0155 | 33 | 22-28-9330 | 42377-0173 |
| 16 | 22-28-9160 | 42377-0156 | 34 | 22-28-9340 | 42377-0174 |
| 17 | 22-28-9170 | 42377-0157 | 35 | 22-28-9350 | 42377-0175 |
| 18 | 22-28-9180 | 42377-0158 | 36 | 22-28-9360 | 42377-0176 |
| 19 | 22-28-9190 | 42377-0159 | | | |

| ✓ A-42377-0177 / 0211 | |
|---|---|
| HEADER NUMBER: | 42312-0036 |
| PIN NUMBER: | 42663-BXA154 |
| PIN LENGTH: L | .645/16.38 |
| MATING LENGTH: M | .324/8.23 |
| GOLD POINT: G | N/A |
| PIN HEIGHT: Y | .070/1.78 |
| PC TAIL LENGTH: P | .135/3.43 |
| TIN: T | OVERALL |
| CKTS: | 2-36 |
| KINKS: | PER SMES-42003 |
| REMOVED BACKWALLS: | NONE |
| VOIDED CKTS: | NONE |
| PACKAGING: | BULK PK-40873-0041 |

| CKTS | MATERIAL NUMBER | ENG NUMBER | CKTS | MATERIAL NUMBER | ENG NUMBER |
|---|---|---|---|---|---|
| 02 | 22-28-9021 | 42377-0177 | 20 | 22-28-9201 | 42377-0195 |
| 03 | 22-28-9031 | 42377-0178 | 21 | 22-28-9211 | 42377-0196 |
| 04 | 22-28-9041 | 42377-0179 | 22 | 22-28-9221 | 42377-0197 |
| 05 | 22-28-9051 | 42377-0180 | 23 | 22-28-9231 | 42377-0198 |
| 06 | 22-28-9061 | 42377-0181 | 24 | 22-28-9241 | 42377-0199 |
| 07 | 22-28-9071 | 42377-0182 | 25 | 22-28-9251 | 42377-0200 |
| 08 | 22-28-9081 | 42377-0183 | 26 | 22-28-9261 | 42377-0201 |
| 09 | 22-28-9091 | 42377-0184 | 27 | 22-28-9271 | 42377-0202 |
| 10 | 22-28-9101 | 42377-0185 | 28 | 22-28-9281 | 42377-0203 |
| 11 | 22-28-9111 | 42377-0186 | 29 | 22-28-9291 | 42377-0204 |
| 12 | 22-28-9121 | 42377-0187 | 30 | 22-28-9301 | 42377-0205 |
| 13 | 22-28-9131 | 42377-0188 | 31 | 22-28-9311 | 42377-0206 |
| 14 | 22-28-9141 | 42377-0189 | 32 | 22-28-9321 | 42377-0207 |
| 15 | 22-28-9151 | 42377-0190 | 33 | 22-28-9331 | 42377-0208 |
| 16 | 22-28-9161 | 42377-0191 | 34 | 22-28-9341 | 42377-0209 |
| 17 | 22-28-9171 | 42377-0192 | 35 | 22-28-9351 | 42377-0210 |
| 18 | 22-28-9181 | 42377-0193 | 36 | 22-28-9361 | 42377-0211 |
| 19 | 22-28-9191 | 42377-0194 | | | |

| REV: | ECM INFORMATION: | TITLE: | SHEET No. |
|---|---|---|---|
| **Y2** | ECM No: **107985**<br>DATE: **10/25/2024** | **KK 100 HEADER ASSEMBLY<br>FLAT RIGHT ANGLE<br>BREAKAWAY** | **- 4 -** |

| DOCUMENT NUMBER: | CREATED / REVISED BY: | CHECKED BY: | APPROVED BY: |
|---|---|---|---|
| **SD- 42377-001** | **BAPPELDORN** | **MKIPPER** | **FSMITH** |

| ✓ A-42377-0212/0246 | |
|---|---|
| HEADER NUMBER: | 42312-0036 |
| PIN NUMBER: | 42663-BCB208 |
| PIN LENGTH: L | .565/14.35 |
| MATING LENGTH: M | .244/6.20 |
| GOLD POINT: G | .100/2.54 |
| PIN HEIGHT: Y | .070/1.78 |
| PC TAIL LENGTH: P | . 135/3.43 |
| TIN: T | . 135/3.43 |
| CKTS: | 2-36 |
| KINKS: | PER SMES-42003 |
| REMOVED BACKWALLS: | NONE |
| VOIDED CKTS: | NONE |
| PACKAGING: | BULK PK-40873-0041 |

| CKTS | MATERIAL NUMBER | ENG NUMBER | CKTS | MATERIAL NUMBER | ENG NUMBER |
|---|---|---|---|---|---|
| 02 | 22-28-9022 | 42377-0212 | 20 | 22-28-9202 | 42377-0230 |
| 03 | 22-28-9032 | 42377-0213 | 21 | 22-28-9212 | 42377-0231 |
| 04 | 22-28-9042 | 42377-0214 | 22 | 22-28-9222 | 42377-0232 |
| 05 | 22-28-9052 | 42377-0215 | 23 | 22-28-9232 | 42377-0233 |
| 06 | 22-28-9062 | 42377-0216 | 24 | 22-28-9242 | 42377-0234 |
| 07 | 22-28-9072 | 42377-0217 | 25 | 22-28-9252 | 42377-0235 |
| 08 | 22-28-9082 | 42377-0218 | 26 | 22-28-9262 | 42377-0236 |
| 09 | 22-28-9092 | 42377-0219 | 27 | 22-28-9272 | 42377-0237 |
| 10 | 22-28-9102 | 42377-0220 | 28 | 22-28-9282 | 42377-0238 |
| 11 | 22-28-9112 | 42377-0221 | 29 | 22-28-9292 | 42377-0239 |
| 12 | 22-28-9122 | 42377-0222 | 30 | 22-28-9302 | 42377-0240 |
| 13 | 22-28-9132 | 42377-0223 | 31 | 22-28-9312 | 42377-0241 |
| 14 | 22-28-9142 | 42377-0224 | 32 | 22-28-9322 | 42377-0242 |
| 15 | 22-28-9152 | 42377-0225 | 33 | 22-28-9332 | 42377-0243 |
| 16 | 22-28-9162 | 42377-0226 | 34 | 22-28-9342 | 42377-0244 |
| 17 | 22-28-9172 | 42377-0227 | 35 | 22-28-9352 | 42377-0245 |
| 18 | 22-28-9182 | 42377-0228 | 36 | 22-28-9362 | 42377-0246 |
| 19 | 22-28-9192 | 42377-0229 | | | |

| ✓ A-42377-0247-0281 | |
|---|---|
| HEADER NUMBER: | 42312-0036 |
| PIN NUMBER: | 42663-BXB208 |
| PIN LENGTH: L | .645/16.38 |
| MATING LENGTH: M | .324/8.23 |
| GOLD POINT: G | .140/3.56 |
| PIN HEIGHT: Y | .070/1.78 |
| PC TAIL LENGTH: P | .135/3.43 |
| TIN: T | .135/3.43 |
| CKTS: | 2-36 |
| KINKS: | PER SMES-42003 |
| REMOVED BACKWALLS: | NONE |
| VOIDED CKTS: | NONE |
| PACKAGING: | BULK PK-40873-0041 |

| CKTS | MATERIAL NUMBER | ENG NUMBER | CKTS | MATERIAL NUMBER | ENG NUMBER |
|---|---|---|---|---|---|
| 02 | 22-28-9023 | 42377-0247 | 20 | 22-28-9203 | 42377-0265 |
| 03 | 22-28-9033 | 42377-0248 | 21 | 22-28-9213 | 42377-0266 |
| 04 | 22-28-9043 | 42377-0249 | 22 | 22-28-9223 | 42377-0267 |
| 05 | 22-28-9053 | 42377-0250 | 23 | 22-28-9233 | 42377-0268 |
| 06 | 22-28-9063 | 42377-0251 | 24 | 22-28-9243 | 42377-0269 |
| 07 | 22-28-9073 | 42377-0252 | 25 | 22-28-9253 | 42377-0270 |
| 08 | 22-28-9083 | 42377-0253 | 26 | 22-28-9263 | 42377-0271 |
| 09 | 22-28-9093 | 42377-0254 | 27 | 22-28-9273 | 42377-0272 |
| 10 | 22-28-9103 | 42377-0255 | 28 | 22-28-9283 | 42377-0273 |
| 11 | 22-28-9113 | 42377-0256 | 29 | 22-28-9293 | 42377-0274 |
| 12 | 22-28-9123 | 42377-0257 | 30 | 22-28-9303 | 42377-0275 |
| 13 | 22-28-9133 | 42377-0258 | 31 | 22-28-9313 | 42377-0276 |
| 14 | 22-28-9143 | 42377-0259 | 32 | 22-28-9323 | 42377-0277 |
| 15 | 22-28-9153 | 42377-0260 | 33 | 22-28-9333 | 42377-0278 |
| 16 | 22-28-9163 | 42377-0261 | 34 | 22-28-9343 | 42377-0279 |
| 17 | 22-28-9173 | 42377-0262 | 35 | 22-28-9353 | 42377-0280 |
| 18 | 22-28-9183 | 42377-0263 | 36 | 22-28-9363 | 42377-0281 |
| 19 | 22-28-9193 | 42377-0264 | | | |

| REV: | ECM INFORMATION: | TITLE: | SHEET No. |
|---|---|---|---|
| **Y2** | ECM No: **107985**<br>DATE: **10/25/2024** | **KK 100 HEADER ASSEMBLY**<br>**FLAT RIGHT ANGLE**<br>**BREAKAWAY** | **- 5 -** |

| DOCUMENT NUMBER: | CREATED / REVISED BY: | CHECKED BY: | APPROVED BY: |
|---|---|---|---|
| **SD- 42377-001** | **BAPPELDORN** | **MKIPPER** | **FSMITH** |

| ✓ A-42377-0282 / 0316 | |
|---|---|
| HEADER NUMBER: | 42312-0036 |
| PIN NUMBER: | 42663-AZB228 |
| PIN LENGTH: L | .550/13.97 |
| MATING LENGTH: M | .244/6.20 |
| GOLD POINT: G | .140/3.56 |
| PIN HEIGHT: Y | .070/1.78 |
| PC TAIL LENGTH: P | .120/3.05 |
| TIN: T | .135/3.43 |
| CKTS: | 2-36 |
| KINKS: | NONE |
| REMOVED BACKWALLS: | NONE |
| VOIDED CKTS: | NONE |
| PACKAGING: | BULK PK-40873-0041 |

| CKTS | MATERIAL NUMBER | ENG NUMBER | CKTS | MATERIAL NUMBER | ENG NUMBER |
|---|---|---|---|---|---|
| 02 | 22-28-8024 | 42377-0282 | 20 | 22-28-8204 | 42377-0300 |
| 03 | 22-28-8034 | 42377-0283 | 21 | 22-28-8214 | 42377-0301 |
| 04 | 22-28-8044 | 42377-0284 | 22 | 22-28-8224 | 42377-0302 |
| 05 | 22-28-8054 | 42377-0285 | 23 | 22-28-8234 | 42377-0303 |
| 06 | 22-28-8064 | 42377-0286 | 24 | 22-28-8244 | 42377-0304 |
| 07 | 22-28-8074 | 42377-0287 | 25 | 22-28-8254 | 42377-0305 |
| 08 | 22-28-8084 | 42377-0288 | 26 | 22-28-8264 | 42377-0306 |
| 09 | 22-28-8094 | 42377-0289 | 27 | 22-28-8274 | 42377-0307 |
| 10 | 22-28-8104 | 42377-0290 | 28 | 22-28-8284 | 42377-0308 |
| 11 | 22-28-8114 | 42377-0291 | 29 | 22-28-8294 | 42377-0309 |
| 12 | 22-28-8124 | 42377-0292 | 30 | 22-28-8304 | 42377-0310 |
| 13 | 22-28-8134 | 42377-0293 | 31 | 22-28-8314 | 42377-0311 |
| 14 | 22-28-8144 | 42377-0294 | 32 | 22-28-8324 | 42377-0312 |
| 15 | 22-28-8154 | 42377-0295 | 33 | 22-28-8334 | 42377-0313 |
| 16 | 22-28-8164 | 42377-0296 | 34 | 22-28-8344 | 42377-0314 |
| 17 | 22-28-8174 | 42377-0297 | 35 | 22-28-8354 | 42377-0315 |
| 18 | 22-28-8184 | 42377-0298 | 36 | 22-28-8364 | 42377-0316 |
| 19 | 22-28-8194 | 42377-0299 | | | |

| ✓ A-42377-0317 / 0351 | |
|---|---|
| HEADER NUMBER: | 42312-0036 |
| PIN NUMBER: | 42663-BSB228 |
| PIN LENGTH: L | .630/16.00 |
| MATING LENGTH: M | .324/8.23 |
| GOLD POINT: G | .140/3.56 |
| PIN HEIGHT: Y | .070/1.78 |
| PC TAIL LENGTH: P | .120/3.05 |
| TIN: T | .135/3.43 |
| CKTS: | 2-36 |
| KINKS: | NONE |
| REMOVED BACKWALLS: | NONE |
| VOIDED CKTS: | NONE |
| PACKAGING: | BULK PK-40873-0041 |

| CKTS | MATERIAL NUMBER | ENG NUMBER | CKTS | MATERIAL NUMBER | ENG NUMBER |
|---|---|---|---|---|---|
| 02 | 22-28-8025 | 42377-0317 | 20 | 22-28-8205 | 42377-0335 |
| 03 | 22-28-8035 | 42377-0318 | 21 | 22-28-8215 | 42377-0336 |
| 04 | 22-28-8045 | 42377-0319 | 22 | 22-28-8225 | 42377-0337 |
| 05 | 22-28-8055 | 42377-0320 | 23 | 22-28-8235 | 42377-0338 |
| 06 | 22-28-8065 | 42377-0321 | 24 | 22-28-8245 | 42377-0339 |
| 07 | 22-28-8075 | 42377-0322 | 25 | 22-28-8255 | 42377-0340 |
| 08 | 22-28-8085 | 42377-0323 | 26 | 22-28-8265 | 42377-0341 |
| 09 | 22-28-8095 | 42377-0324 | 27 | 22-28-8275 | 42377-0342 |
| 10 | 22-28-8105 | 42377-0325 | 28 | 22-28-8285 | 42377-0343 |
| 11 | 22-28-8115 | 42377-0326 | 29 | 22-28-8295 | 42377-0344 |
| 12 | 22-28-8125 | 42377-0327 | 30 | 22-28-8305 | 42377-0345 |
| 13 | 22-28-8135 | 42377-0328 | 31 | 22-28-8315 | 42377-0346 |
| 14 | 22-28-8145 | 42377-0329 | 32 | 22-28-8325 | 42377-0347 |
| 15 | 22-28-8155 | 42377-0330 | 33 | 22-28-8335 | 42377-0348 |
| 16 | 22-28-8165 | 42377-0331 | 34 | 22-28-8345 | 42377-0349 |
| 17 | 22-28-8175 | 42377-0332 | 35 | 22-28-8355 | 42377-0350 |
| 18 | 22-28-8185 | 42377-0333 | 36 | 22-28-8365 | 42377-0351 |
| 19 | 22-28-8195 | 42377-0334 | | | |

| REV: | ECM INFORMATION: | TITLE: | SHEET No. |
|---|---|---|---|
| **Y2** | ECM No: **107985**<br>DATE: **10/25/2024** | **KK 100 HEADER ASSEMBLY**<br>**FLAT RIGHT ANGLE**<br>**BREAKAWAY** | **- 6 -** |

| DOCUMENT NUMBER: | CREATED / REVISED BY: | CHECKED BY: | APPROVED BY: |
|---|---|---|---|
| **SD- 42377-001** | **BAPPELDORN** | **MKIPPER** | **FSMITH** |

| ✓ A-42377-0352/0386 | |
|---|---|
| HEADER NUMBER: | 42312-0036 |
| PIN NUMBER: | 42663-BCB228 |
| PIN LENGTH: L | .565/14.35 |
| MATING LENGTH: M | .244/6.20 |
| GOLD POINT: G | .100/2.54 |
| PIN HEIGHT: Y | .070/1.78 |
| PC TAIL LENGTH: P | .135/3.43. |
| TIN: T | .135/3.43 |
| CKTS: | 2-36 |
| KINKS: | PER SMES-42003 |
| REMOVED BACKWALLS: | NONE |
| VOIDED CKTS: | NONE |
| PACKAGING: | BULK PK-40873-0041 |

| CKTS | MATERIAL NUMBER | ENG NUMBER | CKTS | MATERIAL NUMBER | ENG NUMBER |
|---|---|---|---|---|---|
| 02 | 22-28-9024 | 42377-0352 | 20 | 22-28-9204 | 42377-0370 |
| 03 | 22-28-9034 | 42377-0353 | 21 | 22-28-9214 | 42377-0371 |
| 04 | 22-28-9044 | 42377-0354 | 22 | 22-28-9224 | 42377-0372 |
| 05 | 22-28-9054 | 42377-0355 | 23 | 22-28-9234 | 42377-0373 |
| 06 | 22-28-9064 | 42377-0356 | 24 | 22-28-9244 | 42377-0374 |
| 07 | 22-28-9074 | 42377-0357 | 25 | 22-28-9254 | 42377-0375 |
| 08 | 22-28-9084 | 42377-0358 | 26 | 22-28-9264 | 42377-0376 |
| 09 | 22-28-9094 | 42377-0359 | 27 | 22-28-9274 | 42377-0377 |
| 10 | 22-28-9104 | 42377-0360 | 28 | 22-28-9284 | 42377-0378 |
| 11 | 22-28-9114 | 42377-0361 | 29 | 22-28-9294 | 42377-0379 |
| 12 | 22-28-9124 | 42377-0362 | 30 | 22-28-9304 | 42377-0380 |
| 13 | 22-28-9134 | 42377-0363 | 31 | 22-28-9314 | 42377-0381 |
| 14 | 22-28-9144 | 42377-0364 | 32 | 22-28-9324 | 42377-0382 |
| 15 | 22-28-9154 | 42377-0365 | 33 | 22-28-9334 | 42377-0383 |
| 16 | 22-28-9164 | 42377-0366 | 34 | 22-28-9344 | 42377-0384 |
| 17 | 22-28-9174 | 42377-0367 | 35 | 22-28-9354 | 42377-0385 |
| 18 | 22-28-9184 | 42377-0368 | 36 | 22-28-9364 | 42377-0386 |
| 19 | 22-28-9194 | 42377-0369 | | | |

| ✓ A-42377-0387/0421 | |
|---|---|
| HEADER NUMBER: | 42312-0036 |
| PIN NUMBER: | 42663-BXB228 |
| PIN LENGTH: L | .645/16.38 |
| MATING LENGTH: M | .324/8.23 |
| GOLD POINT: G | .140/3.56 |
| PIN HEIGHT: Y | .070/1.78 |
| PC TAIL LENGTH: P | .135/3.43 |
| TIN: T | .135/3.43 |
| CKTS: | 2-36 |
| KINKS: | PER SMES-42003 |
| REMOVED BACKWALLS: | NONE |
| VOIDED CKTS: | NONE |
| PACKAGING: | BULK PK-40873-0041 |

| CKTS | MATERIAL NUMBER | ENG NUMBER | CKTS | MATERIAL NUMBER | ENG NUMBER |
|---|---|---|---|---|---|
| 02 | 22-28-9025 | 42377-0387 | 20 | 22-28-9205 | 42377-0405 |
| 03 | 22-28-9035 | 42377-0388 | 21 | 22-28-9215 | 42377-0406 |
| 04 | 22-28-9045 | 42377-0389 | 22 | 22-28-9225 | 42377-0407 |
| 05 | 22-28-9055 | 42377-0390 | 23 | 22-28-9235 | 42377-0408 |
| 06 | 22-28-9065 | 42377-0391 | 24 | 22-28-9245 | 42377-0409 |
| 07 | 22-28-9075 | 42377-0392 | 25 | 22-28-9255 | 42377-0410 |
| 08 | 22-28-9085 | 42377-0393 | 26 | 22-28-9265 | 42377-0411 |
| 09 | 22-28-9095 | 42377-0394 | 27 | 22-28-9275 | 42377-0412 |
| 10 | 22-28-9105 | 42377-0395 | 28 | 22-28-9285 | 42377-0413 |
| 11 | 22-28-9115 | 42377-0396 | 29 | 22-28-9295 | 42377-0414 |
| 12 | 22-28-9125 | 42377-0397 | 30 | 22-28-9305 | 42377-0415 |
| 13 | 22-28-9135 | 42377-0398 | 31 | 22-28-9315 | 42377-0416 |
| 14 | 22-28-9145 | 42377-0399 | 32 | 22-28-9325 | 42377-0417 |
| 15 | 22-28-9155 | 42377-0400 | 33 | 22-28-9335 | 42377-0418 |
| 16 | 22-28-9165 | 42377-0401 | 34 | 22-28-9345 | 42377-0419 |
| 17 | 22-28-9175 | 42377-0402 | 35 | 22-28-9355 | 42377-0420 |
| 18 | 22-28-9185 | 42377-0403 | 36 | 22-28-9365 | 42377-0421 |
| 19 | 22-28-9195 | 42377-0404 | | | |

| REV: | ECM INFORMATION: | TITLE: | SHEET No. |
|---|---|---|---|
| **Y2** | ECM No: **107985**<br>DATE: **10/25/2024** | **KK 100 HEADER ASSEMBLY**<br>**FLAT RIGHT ANGLE**<br>**BREAKAWAY** | **- 7 -** |

| DOCUMENT NUMBER: | CREATED / REVISED BY: | CHECKED BY: | APPROVED BY: |
|---|---|---|---|
| **SD- 42377-001** | **BAPPELDORN** | **MKIPPER** | **FSMITH** |

| ✓ A-42377-0504 | |
|---|---|
| HEADER NUMBER: | 42312-0036 |
| PIN NUMBER: | 42663-ABA154 |
| PIN LENGTH: L | .455/11.56 |
| MATING LENGTH: M | .149/3.78 |
| GOLD POINT: G | N/A |
| PIN HEIGHT: Y | .070/1.78 |
| PC TAIL LENGTH: P | .120/3.05 |
| TIN: T | OVERALL |
| CKTS: | 2-36 |
| KINKS: | NONE |
| REMOVED BACKWALLS: | NONE |
| VOIDED CKTS: | NONE |
| PACKAGING: | BULK PK-40873-0041 |

| CKTS | MATERIAL NUMBER | ENG NUMBER | CKTS | MATERIAL NUMBER | ENG NUMBER |
|---|---|---|---|---|---|
| 02 | | | 20 | | |
| 03 | | | 21 | | |
| 04 | | | 22 | | |
| 05 | | | 23 | | |
| 06 | | | 24 | | |
| 07 | | | 25 | | |
| 08 | | | 26 | | |
| 09 | | | 27 | | |
| 10 | | | 28 | | |
| 11 | | | 29 | | |
| 12 | | | 30 | | |
| 13 | | | 31 | | |
| 14 | 22-28-9148 | A-42377-0504 | 32 | | |
| 15 | | | 33 | | |
| 16 | | | 34 | | |
| 17 | | | 35 | | |
| 18 | | | 36 | | |
| 19 | | | | | |

| ✓ A-42377-0505 | |
|---|---|
| HEADER NUMBER: | 42312-0036 |
| PIN NUMBER: | 42663-BSA154 |
| PIN LENGTH: L | .640/16.00 |
| MATING LENGTH: M | .324/8.23 |
| GOLD POINT: G | N/A |
| PIN HEIGHT: Y | .070/1.78 |
| PC TAIL LENGTH: P | .120/3.05 |
| TIN: T | OVERALL |
| CKTS: | 2-36 |
| KINKS: | NONE |
| REMOVED BACKWALLS: | NONE |
| VOIDED CKTS: | NONE |
| PACKAGING: | T&R 22289039-PK |

| CKTS | MATERIAL NUMBER | ENG NUMBER | CKTS | MATERIAL NUMBER | ENG NUMBER |
|---|---|---|---|---|---|
| 02 | | | 20 | | |
| 03 | 22-28-9039 | A-42377-0505 | 21 | | |
| 04 | | | 22 | | |
| 05 | | | 23 | | |
| 06 | | | 24 | | |
| 07 | | | 25 | | |
| 08 | | | 26 | | |
| 09 | | | 27 | | |
| 10 | | | 28 | | |
| 11 | | | 29 | | |
| 12 | | | 30 | | |
| 13 | | | 31 | | |
| 14 | | | 32 | | |
| 15 | | | 33 | | |
| 16 | | | 34 | | |
| 17 | | | 35 | | |
| 18 | | | 36 | | |
| 19 | | | | | |

| REV: | ECM INFORMATION: | TITLE: | SHEET No. |
|---|---|---|---|
| **Y2** | ECM No: **107985**<br>DATE: **10/25/2024** | **KK 100 HEADER ASSEMBLY**<br>**FLAT RIGHT ANGLE**<br>**BREAKAWAY** | **- 8 -** |

| DOCUMENT NUMBER: | CREATED / REVISED BY: | CHECKED BY: | APPROVED BY: |
|---|---|---|---|
| **SD- 42377-001** | **BAPPELDORN** | **MKIPPER** | **FSMITH** |

| ✓ A-42377-0693 / 0726 | |
|---|---|
| HEADER NUMBER: | 42312-0036 |
| PIN NUMBER: | 42663-BCA154 |
| PIN LENGTH: L | .565/14.35 |
| MATING LENGTH: M | .244/6.20 |
| GOLD POINT: G | N/A |
| PIN HEIGHT: Y | .070/1.78 |
| PC TAIL LENGTH: P | .135/3.43 |
| TIN: T | OVERALL |
| CKTS: | 3-36 |
| KINKS: | PER SMES-42003 |
| REMOVED BACKWALLS: | NO |
| VOIDED CKTS: | 2 |
| PACKAGING: | BULK PK-40873-0041 |

| CKTS | MATERIAL NUMBER | CKTS | MATERIAL NUMBER |
|---|---|---|---|
| 02 | | 20 | 42377-0710 |
| 03 | 42377-0693 | 21 | 42377-0711 |
| 04 | 42377-0694 | 22 | 42377-0712 |
| 05 | 42377-0695 | 23 | 42377-0713 |
| 06 | 42377-0696 | 24 | 42377-0714 |
| 07 | 42377-0697 | 25 | 42377-0715 |
| 08 | 42377-0698 | 26 | 42377-0716 |
| 09 | 42377-0699 | 27 | 42377-0717 |
| 10 | 42377-0700 | 28 | 42377-0718 |
| 11 | 42377-0701 | 29 | 42377-0719 |
| 12 | 42377-0702 | 30 | 42377-0720 |
| 13 | 42377-0703 | 31 | 42377-0721 |
| 14 | 42377-0704 | 32 | 42377-0727 |
| 15 | 42377-0705 | 33 | 42377-0723 |
| 16 | 42377-0706 | 34 | 42377-0724 |
| 17 | 42377-0707 | 35 | 42377-0725 |
| 18 | 42377-0708 | 36 | 42377-0726 |
| 19 | 42377-0709 | | |

| ✓ A-42377-0779 / 0813 | |
|---|---|
| HEADER NUMBER: | 42312-0036 |
| PIN NUMBER: | 42663-ANA154 |
| PIN LENGTH: L | .510/12.95 |
| MATING LENGTH: M | .134/3.40 |
| GOLD POINT: G | N/A |
| PIN HEIGHT: Y | .060/1.52 |
| PC TAIL LENGTH: P | .200/5.08 |
| TIN: T | OVERALL |
| CKTS: | 2-36 |
| KINKS: | NONE |
| REMOVED BACKWALLS: | NONE |
| VOIDED CKTS: | NONE |
| PACKAGING: | BULK PK-40873-0041 |

| CKTS | MATERIAL NUMBER | CKTS | MATERIAL NUMBER |
|---|---|---|---|
| 02 | 42377-0779 | 20 | 42377-0797 |
| 03 | 42377-0780 | 21 | 42377-0798 |
| 04 | 42377-0781 | 22 | 42377-0799 |
| 05 | 42377-0782 | 23 | 42377-0800 |
| 06 | 42377-0783 | 24 | 42377-0801 |
| 07 | 42377-0784 | 25 | 42377-0802 |
| 08 | 42377-0785 | 26 | 42377-0803 |
| 09 | 42377-0786 | 27 | 42377-0804 |
| 10 | 42377-0787 | 28 | 42377-0805 |
| 11 | 42377-0788 | 29 | 42377-0806 |
| 12 | 42377-0789 | 30 | 42377-0807 |
| 13 | 42377-0790 | 31 | 42377-0808 |
| 14 | 42377-0791 | 32 | 42377-0809 |
| 15 | 42377-0792 | 33 | 42377-0810 |
| 16 | 42377-0793 | 34 | 42377-0811 |
| 17 | 42377-0794 | 35 | 42377-0812 |
| 18 | 42377-0795 | 36 | 42377-0813 |
| 19 | 42377-0796 | | |

| REV: | ECM INFORMATION: | TITLE: | SHEET No. |
|---|---|---|---|
| **Y2** | ECM No: **107985**<br>DATE: **10/25/2024** | **KK 100 HEADER ASSEMBLY<br>FLAT RIGHT ANGLE<br>BREAKAWAY** | **- 9 -** |

| DOCUMENT NUMBER: | CREATED / REVISED BY: | CHECKED BY: | APPROVED BY: |
|---|---|---|---|
| **SD- 42377-001** | **BAPPELDORN** | **MKIPPER** | **FSMITH** |

| ✓ A-42377-0864 / 0898 | |
|---|---|
| HEADER NUMBER: | 42312-0036 |
| PIN NUMBER: | 42663-BXA154 |
| PIN LENGTH: L | .645/16.38 |
| MATING LENGTH: M | .324/8.28 |
| GOLD POINT: G | N/A |
| PIN HEIGHT: Y | .070/1.78 |
| PC TAIL LENGTH: P | .135/3.43 |
| TIN: T | OVERALL |
| CKTS: | 2-36 |
| KINKS: | NONE |
| REMOVED BACKWALLS: | NONE |
| VOIDED CKTS: | NONE |
| PACKAGING: | BULK PK-40873-0041 |

| CKTS | MATERIAL NUMBER | CKTS | MATERIAL NUMBER |
|---|---|---|---|
| 02 | 42377-0864 | 20 | 42377-0882 |
| 03 | 42377-0865 | 21 | 42377-0883 |
| 04 | 42377-0866 | 22 | 42377-0884 |
| 05 | 42377-0867 | 23 | 42377-0885 |
| 06 | 42377-0868 | 24 | 42377-0886 |
| 07 | 42377-0869 | 25 | 42377-0887 |
| 08 | 42377-0870 | 26 | 42377-0888 |
| 09 | 42377-0871 | 27 | 42377-0889 |
| 10 | 42377-0872 | 28 | 42377-0890 |
| 11 | 42377-0873 | 29 | 42377-0891 |
| 12 | 42377-0874 | 30 | 42377-0892 |
| 13 | 42377-0875 | 31 | 42377-0893 |
| 14 | 42377-0876 | 32 | 42377-0894 |
| 15 | 42377-0877 | 33 | 42377-0895 |
| 16 | 42377-0878 | 34 | 42377-0896 |
| 17 | 42377-0879 | 35 | 42377-0897 |
| 18 | 42377-0880 | 36 | 42377-0898 |
| 19 | 42377-0881 | | |

| ✓ A-42377-0899/ 0927 | |
|---|---|
| HEADER NUMBER: | 42312-0036 |
| PIN NUMBER: | 42663-BXB208 |
| PIN LENGTH: L | .645/16.38 |
| MATING LENGTH: M | .324/8.28 |
| GOLD POINT: G | .140/3.56 |
| PIN HEIGHT: Y | .070/1.78 |
| PC TAIL LENGTH: P | .135/3.43 |
| TIN: T | .135/3.43 |
| CKTS: | 8-36 |
| KINKS: | PER SMES-42003 |
| REMOVED BACKWALLS: | NONE |
| VOIDED CKTS: | 2,3,4,6,7,8 |
| PACKAGING: | BULK PK-40873-0041 |

| CKTS | MATERIAL NUMBER | CKTS | MATERIAL NUMBER |
|---|---|---|---|
| 02 | | 20 | 42377-0911 |
| 03 | | 21 | 42377-0912 |
| 04 | | 22 | 42377-0913 |
| 05 | | 23 | 42377-0914 |
| 06 | | 24 | 42377-0915 |
| 07 | | 25 | 42377-0916 |
| 08 | 42377-0899 | 26 | 42377-0917 |
| 09 | 42377-0900 | 27 | 42377-0918 |
| 10 | 42377-0901 | 28 | 42377-0919 |
| 11 | 42377-0902 | 29 | 42377-0920 |
| 12 | 42377-0903 | 30 | 42377-0921 |
| 13 | 42377-0904 | 31 | 42377-0922 |
| 14 | 42377-0905 | 32 | 42377-0923 |
| 15 | 42377-0906 | 33 | 42377-0924 |
| 16 | 42377-0907 | 34 | 42377-0925 |
| 17 | 42377-0908 | 35 | 42377-0926 |
| 18 | 42377-0909 | 36 | 42377-0927 |
| 19 | 42377-0910 | | |

| REV: | ECM INFORMATION: | TITLE: | SHEET No. |
|---|---|---|---|
| **Y2** | ECM No: **107985**<br>DATE: **10/25/2024** | **KK 100 HEADER ASSEMBLY<br>FLAT RIGHT ANGLE<br>BREAKAWAY** | **- 10 -** |

| DOCUMENT NUMBER: | CREATED / REVISED BY: | CHECKED BY: | APPROVED BY: |
|---|---|---|---|
| **SD- 42377-001** | **BAPPELDORN** | **MKIPPER** | **FSMITH** |

| ✓ A-42377-0928 / 0962 | |
|---|---|
| HEADER NUMBER: | 42312-0036 |
| PIN NUMBER: | 42663-DHB208 |
| PIN LENGTH: L | .800/20.32 |
| MATING LENGTH: M | .317/8.05 |
| GOLD POINT: G | .180/4.57 |
| PIN HEIGHT: Y | .070/1.78 |
| PC TAIL LENGTH: P | .290/7.37 |
| TIN: T | .135/3.43 |
| CKTS: | 2-36 |
| KINKS: | NONE |
| REMOVED BACKWALLS: | NONE |
| VOIDED CKTS: | NONE |
| PACKAGING: | BULK PK-40873-0043 |

| CKTS | MATERIAL NUMBER | CKTS | MATERIAL NUMBER |
|---|---|---|---|
| 02 | 42377-0928 | 20 | 42377-0946 |
| 03 | 42377-0929 | 21 | 42377-0947 |
| 04 | 42377-0930 | 22 | 42377-0948 |
| 05 | 42377-0931 | 23 | 42377-0949 |
| 06 | 42377-0932 | 24 | 42377-0950 |
| 07 | 42377-0933 | 25 | 42377-0951 |
| 08 | 42377-0934 | 26 | 42377-0952 |
| 09 | 42377-0935 | 27 | 42377-0953 |
| 10 | 42377-0936 | 28 | 42377-0954 |
| 11 | 42377-0937 | 29 | 42377-0955 |
| 12 | 42377-0938 | 30 | 42377-0956 |
| 13 | 42377-0939 | 31 | 42377-0957 |
| 14 | 42377-0940 | 32 | 42377-0958 |
| 15 | 42377-0941 | 33 | 42377-0959 |
| 16 | 42377-0942 | 34 | 42377-0960 |
| 17 | 42377-0943 | 35 | 42377-0961 |
| 18 | 42377-0944 | 36 | 42377-0962 |
| 19 | 42377-0945 | | |

| ✓ A-42377-0963/ 0997 | |
|---|---|
| HEADER NUMBER: | 42312-0036 |
| PIN NUMBER: | 42663-ABA154 |
| PIN LENGTH: L | .455/11.56 |
| MATING LENGTH: M | .140/3.56 |
| GOLD POINT: G | N/A |
| PIN HEIGHT: Y | .050/1.27 |
| PC TAIL LENGTH: P | .145/3.68 |
| TIN: T | OVERALL |
| CKTS: | 2-36 |
| KINKS: | NONE |
| REMOVED BACKWALLS: | NONE |
| VOIDED CKTS: | NONE |
| PACKAGING: | BULK PK-40873-0041 |

| CKTS | MATERIAL NUMBER | CKTS | MATERIAL NUMBER |
|---|---|---|---|
| 02 | 42377-0963 | 20 | 42377-0981 |
| 03 | 42377-0964 | 21 | 42377-0982 |
| 04 | 42377-0965 | 22 | 42377-0983 |
| 05 | 42377-0966 | 23 | 42377-0984 |
| 06 | 42377-0967 | 24 | 42377-0985 |
| 07 | 42377-0968 | 25 | 42377-0986 |
| 08 | 42377-0969 | 26 | 42377-0987 |
| 09 | 42377-0970 | 27 | 42377-0988 |
| 10 | 42377-0971 | 28 | 42377-0989 |
| 11 | 42377-0972 | 29 | 42377-0990 |
| 12 | 42377-0973 | 30 | 42377-0991 |
| 13 | 42377-0974 | 31 | 42377-0992 |
| 14 | 42377-0975 | 32 | 42377-0993 |
| 15 | 42377-0976 | 33 | 42377-0994 |
| 16 | 42377-0977 | 34 | 42377-0995 |
| 17 | 42377-0978 | 35 | 42377-0996 |
| 18 | 42377-0979 | 36 | 42377-0997 |
| 19 | 42377-0980 | | |

| REV: | ECM INFORMATION: | TITLE: | SHEET No. |
|---|---|---|---|
| **Y2** | ECM No: **107985**<br>DATE: **10/25/2024** | **KK 100 HEADER ASSEMBLY<br>FLAT RIGHT ANGLE<br>BREAKAWAY** | **- 11 -** |

| DOCUMENT NUMBER: | CREATED / REVISED BY: | CHECKED BY: | APPROVED BY: |
|---|---|---|---|
| **SD- 42377-001** | **BAPPELDORN** | **MKIPPER** | **FSMITH** |

| ✓ A-42377-0998 / 1031 | |
|---|---|
| HEADER NUMBER: | 42312-0036 |
| PIN NUMBER: | 42663-ABA154 |
| PIN LENGTH: L | .455/11.56 |
| MATING LENGTH: M | .140/3.56 |
| GOLD POINT: G | N/A |
| PIN HEIGHT: Y | .050/1.27 |
| PC TAIL LENGTH: P | .145/3.68 |
| TIN: T | OVERALL |
| CKTS: | 3-36 |
| KINKS: | NONE |
| REMOVED BACKWALLS: | NONE |
| VOIDED CKTS: | 3 |
| PACKAGING: | BULK PK-40873-0041 |

| CKTS | MATERIAL NUMBER | CKTS | MATERIAL NUMBER |
|---|---|---|---|
| 02 | | 20 | 42377-1015 |
| 03 | 42377-0998 | 21 | 42377-1016 |
| 04 | 42377-0999 | 22 | 42377-1017 |
| 05 | 42377-1000 | 23 | 42377-1018 |
| 06 | 42377-1001 | 24 | 42377-1019 |
| 07 | 42377-1002 | 25 | 42377-1020 |
| 08 | 42377-1003 | 26 | 42377-1021 |
| 09 | 42377-1004 | 27 | 42377-1022 |
| 10 | 42377-1005 | 28 | 42377-1023 |
| 11 | 42377-1006 | 29 | 42377-1024 |
| 12 | 42377-1007 | 30 | 42377-1025 |
| 13 | 42377-1008 | 31 | 42377-1026 |
| 14 | 42377-1009 | 32 | 42377-1027 |
| 15 | 42377-1010 | 33 | 42377-1028 |
| 16 | 42377-1011 | 34 | 42377-1029 |
| 17 | 42377-1012 | 35 | 42377-1030 |
| 18 | 42377-1013 | 36 | 42377-1031 |
| 19 | 42377-1014 | | |

| ✓ A-42377-1032/ 1066 | |
|---|---|
| HEADER NUMBER: | 42312-0036 |
| PIN NUMBER: | 42663-BYB208 |
| PIN LENGTH: L | .650/16.51 |
| MATING LENGTH: M | .394/10.01 |
| GOLD POINT: G | .200/5.08 |
| PIN HEIGHT: Y | .050/1.27 |
| PC TAIL LENGTH: P | .089/2.26 |
| TIN: T | .200/5.08 |
| CKTS: | 2-36 |
| KINKS: | NONE |
| REMOVED BACKWALLS: | NONE |
| VOIDED CKTS: | NONE |
| PACKAGING: | BULK PK-40873-0041 |

| CKTS | MATERIAL NUMBER | CKTS | MATERIAL NUMBER |
|---|---|---|---|
| 02 | 42377-1032 | 20 | 42377-1050 |
| 03 | 42377-1033 | 21 | 42377-1051 |
| 04 | 42377-1034 | 22 | 42377-1052 |
| 05 | 42377-1035 | 23 | 42377-1053 |
| 06 | 42377-1036 | 24 | 42377-1054 |
| 07 | 42377-1037 | 25 | 42377-1055 |
| 08 | 42377-1038 | 26 | 42377-1056 |
| 09 | 42377-1039 | 27 | 42377-1057 |
| 10 | 42377-1040 | 28 | 42377-1058 |
| 11 | 42377-1041 | 29 | 42377-1059 |
| 12 | 42377-1042 | 30 | 42377-1060 |
| 13 | 42377-1043 | 31 | 42377-1061 |
| 14 | 42377-1044 | 32 | 42377-1062 |
| 15 | 42377-1045 | 33 | 42377-1063 |
| 16 | 42377-1046 | 34 | 42377-1064 |
| 17 | 42377-1047 | 35 | 42377-1065 |
| 18 | 42377-1048 | 36 | 42377-1066 |
| 19 | 42377-1049 | | |

| REV: | ECM INFORMATION: | TITLE: | SHEET No. |
|---|---|---|---|
| **Y2** | ECM No: **107985**<br>DATE: **10/25/2024** | **KK 100 HEADER ASSEMBLY<br>FLAT RIGHT ANGLE<br>BREAKAWAY** | **- 12 -** |

| DOCUMENT NUMBER: | CREATED / REVISED BY: | CHECKED BY: | APPROVED BY: |
|---|---|---|---|
| **SD- 42377-001** | **BAPPELDORN** | **MKIPPER** | **FSMITH** |

| A-42377-1101/1130 | |
|---|---|
| HEADER NUMBER: | 42312-0036 |
| PIN NUMBER: | 42663-BSA154 |
| PIN LENGTH: L | .630/16.00 |
| MATING LENGTH: M | .324/8.23 |
| GOLD POINT: G | N/A |
| PIN HEIGHT: Y | .070/1.78 |
| PC TAIL LENGTH: P | .120/3.05 |
| TIN: T | OVERALL |
| CKTS: | 2-36 |
| KINKS: | NONE |
| REMOVED BACKWALLS: | NONE |
| VOIDED CKTS: | 7 |
| PACKAGING: | BULK PK-40873-0041 |

| CKTS | MATERIAL NUMBER | CKTS | MATERIAL NUMBER |
|---|---|---|---|
| 02 | | 20 | 42377-1114 |
| 03 | | 21 | 42377-1115 |
| 04 | | 22 | 42377-1116 |
| 05 | | 23 | 42377-1117 |
| 06 | | 24 | 42377-1118 |
| 07 | 42377-1101 | 25 | 42377-1119 |
| 08 | 42377-1102 | 26 | 42377-1120 |
| 09 | 42377-1103 | 27 | 42377-1121 |
| 10 | 42377-1104 | 28 | 42377-1122 |
| 11 | 42377-1105 | 29 | 42377-1123 |
| 12 | 42377-1106 | 30 | 42377-1124 |
| 13 | 42377-1107 | 31 | 42377-1125 |
| 14 | 42377-1108 | 32 | 42377-1126 |
| 15 | 42377-1109 | 33 | 42377-1127 |
| 16 | 42377-1110 | 34 | 42377-1128 |
| 17 | 42377-1111 | 35 | 42377-1129 |
| 18 | 42377-1112 | 36 | 42377-1130 |
| 19 | 42377-1113 | | |

| A-42377-1131/1165 | |
|---|---|
| HEADER NUMBER: | 42312-0036 |
| PIN NUMBER: | 42663-ARB208 |
| PIN LENGTH: L | .520/13.21 |
| MATING LENGTH: M | .230/5.84 |
| GOLD POINT: G | .140/3.56 |
| PIN HEIGHT: Y | .070/1.78 |
| PC TAIL LENGTH: P | .093/2.36 |
| TIN: T | .135/3.43 |
| CKTS: | 2-36 |
| KINKS: | NONE |
| REMOVED BACKWALLS: | NONE |
| VOIDED CKTS: | NONE |
| PACKAGING: | BULK PK-40873-0041 |

| CKTS | MATERIAL NUMBER | CKTS | MATERIAL NUMBER |
|---|---|---|---|
| 02 | 42377-1131 | 20 | 42377-1149 |
| 03 | 42377-1132 | 21 | 42377-1150 |
| 04 | 42377-1133 | 22 | 42377-1151 |
| 05 | 42377-1134 | 23 | 42377-1152 |
| 06 | 42377-1135 | 24 | 42377-1153 |
| 07 | 42377-1136 | 25 | 42377-1154 |
| 08 | 42377-1137 | 26 | 42377-1155 |
| 09 | 42377-1138 | 27 | 42377-1156 |
| 10 | 42377-1139 | 28 | 42377-1157 |
| 11 | 42377-1140 | 29 | 42377-1158 |
| 12 | 42377-1141 | 30 | 42377-1159 |
| 13 | 42377-1142 | 31 | 42377-1160 |
| 14 | 42377-1143 | 32 | 42377-1161 |
| 15 | 42377-1144 | 33 | 42377-1162 |
| 16 | 42377-1145 | 34 | 42377-1163 |
| 17 | 42377-1146 | 35 | 42377-1164 |
| 18 | 42377-1147 | 36 | 42377-1165 |
| 19 | 42377-1148 | | |

| REV: | ECM INFORMATION: | TITLE: | SHEET No. |
|---|---|---|---|
| **Y2** | ECM No: **107985**<br>DATE: **10/25/2024** | **KK 100 HEADER ASSEMBLY**<br>**FLAT RIGHT ANGLE**<br>**BREAKAWAY** | **- 13 -** |

| DOCUMENT NUMBER: | CREATED / REVISED BY: | CHECKED BY: | APPROVED BY: |
|---|---|---|---|
| **SD- 42377-001** | **BAPPELDORN** | **MKIPPER** | **FSMITH** |

| A-42377-1166/1200 | |
|---|---|
| HEADER NUMBER: | 42312-0036 |
| PIN NUMBER: | 42663-BKA154 |
| PIN LENGTH: L | .600/15.24 |
| MATING LENGTH: M | .320/8.13 |
| GOLD POINT: G | N/A |
| PIN HEIGHT: Y | .070/1.78 |
| PC TAIL LENGTH: P | .093/2.36 |
| TIN: T | OVERALL |
| CKTS: | 2-36 |
| KINKS: | NONE |
| REMOVED BACKWALLS: | NONE |
| VOIDED CKTS: | NONE |
| PACKAGING: | BULK PK-40873-0041 |

| CKTS | MATERIAL NUMBER | CKTS | MATERIAL NUMBER |
|---|---|---|---|
| 02 | 42377-1166 | 20 | 42377-1184 |
| 03 | 42377-1167 | 21 | 42377-1185 |
| 04 | 42377-1168 | 22 | 42377-1186 |
| 05 | 42377-1169 | 23 | 42377-1187 |
| 06 | 42377-1170 | 24 | 42377-1188 |
| 07 | 42377-1171 | 25 | 42377-1189 |
| 08 | 42377-1172 | 26 | 42377-1190 |
| 09 | 42377-1173 | 27 | 42377-1191 |
| 10 | 42377-1174 | 28 | 42377-1192 |
| 11 | 42377-1175 | 29 | 42377-1193 |
| 12 | 42377-1176 | 30 | 42377-1194 |
| 13 | 42377-1177 | 31 | 42377-1195 |
| 14 | 42377-1178 | 32 | 42377-1196 |
| 15 | 42377-1179 | 33 | 42377-1197 |
| 16 | 42377-1180 | 34 | 42377-1198 |
| 17 | 42377-1181 | 35 | 42377-1199 |
| 18 | 42377-1182 | 36 | 42377-1200 |
| 19 | 42377-1183 | | |

| A-42377-1201/1234 | |
|---|---|
| HEADER NUMBER: | 42312-0036 |
| PIN NUMBER: | 42663-BKA154 |
| PIN LENGTH: L | .600/15.24 |
| MATING LENGTH: M | .320/8.13 |
| GOLD POINT: G | N/A |
| PIN HEIGHT: Y | .070/1.78 |
| PC TAIL LENGTH: P | .093/2.36 |
| TIN: T | OVERALL |
| CKTS: | 3-36 |
| KINKS: | NONE |
| REMOVED BACKWALLS: | NONE |
| VOIDED CKTS: | 2 |
| PACKAGING: | BULK PK-40873-0041 |

| CKTS | MATERIAL NUMBER | CKTS | MATERIAL NUMBER |
|---|---|---|---|
| 02 | | 20 | 42377-1218 |
| 03 | 42377-1201 | 21 | 42377-1219 |
| 04 | 42377-1202 | 22 | 42377-1220 |
| 05 | 42377-1203 | 23 | 42377-1221 |
| 06 | 42377-1204 | 24 | 42377-1222 |
| 07 | 42377-1205 | 25 | 42377-1223 |
| 08 | 42377-1206 | 26 | 42377-1224 |
| 09 | 42377-1207 | 27 | 42377-1225 |
| 10 | 42377-1208 | 28 | 42377-1226 |
| 11 | 42377-1209 | 29 | 42377-1227 |
| 12 | 42377-1210 | 30 | 42377-1228 |
| 13 | 42377-1211 | 31 | 42377-1229 |
| 14 | 42377-1212 | 32 | 42377-1230 |
| 15 | 42377-1213 | 33 | 42377-1231 |
| 16 | 42377-1214 | 34 | 42377-1232 |
| 17 | 42377-1215 | 35 | 42377-1233 |
| 18 | 42377-1216 | 36 | 42377-1234 |
| 19 | 42377-1217 | | |

| REV: | ECM INFORMATION: | TITLE: | SHEET No. |
|---|---|---|---|
| **Y2** | ECM No: **107985**<br>DATE: **10/25/2024** | **KK 100 HEADER ASSEMBLY<br>FLAT RIGHT ANGLE<br>BREAKAWAY** | **- 14 -** |

| DOCUMENT NUMBER: | CREATED / REVISED BY: | CHECKED BY: | APPROVED BY: |
|---|---|---|---|
| **SD- 42377-001** | **BAPPELDORN** | **MKIPPER** | **FSMITH** |

| A-42377-1067/1100 | |
|---|---|
| HEADER NUMBER: | 42312-0036 |
| PIN NUMBER: | 42663-ATB208 |
| PIN LENGTH: L | .530 / 13.46 |
| MATING LENGTH: M | .244 / 6.20 |
| GOLD POINT: G | .140 / 3.56 |
| PIN HEIGHT: Y | .050 / 1.27 |
| PC TAIL LENGTH: P | .120 / 3.05 |
| TIN: T | .135 / 3.43 |
| CKTS: | 3-36 |
| KINKS: | NONE |
| REMOVED BACKWALLS: | NONE |
| VOIDED CKTS: | 3 |
| PACKAGING: | BULK PK-40873-0041 |

| CKTS | MATERIAL NUMBER | CKTS | MATERIAL NUMBER |
|---|---|---|---|
| 02 | | 20 | |
| 03 | | 21 | |
| 04 | | 22 | |
| 05 | | 23 | |
| 06 | | 24 | |
| 07 | | 25 | |
| 08 | | 26 | |
| 09 | | 27 | |
| 10 | | 28 | |
| 11 | 42377-1075 | 29 | |
| 12 | | 30 | |
| 13 | | 31 | |
| 14 | | 32 | |
| 15 | | 33 | |
| 16 | | 34 | |
| 17 | | 35 | |
| 18 | | 36 | |
| 19 | | | |

| A-42377-1235/1269 | |
|---|---|
| HEADER NUMBER: | 42312-0036 |
| PIN NUMBER: | 42663-BXB228 |
| PIN LENGTH: L | .645/16.48 |
| MATING LENGTH: M | .324/8.23 |
| GOLD POINT: G | .140/3.56 |
| PIN HEIGHT: Y | .070/1.78 |
| PC TAIL LENGTH: P | .135/3.43 |
| TIN: T | .135/3.43 |
| CKTS: | 2-36 |
| KINKS: | NONE |
| REMOVED BACKWALLS: | NONE |
| VOIDED CKTS: | NONE |
| PACKAGING: | BULK PK-40873-0041 |

| CKTS | MATERIAL NUMBER | CKTS | MATERIAL NUMBER |
|---|---|---|---|
| 02 | 42377-1235 | 20 | |
| 03 | | 21 | |
| 04 | | 22 | |
| 05 | | 23 | |
| 06 | | 24 | |
| 07 | | 25 | |
| 08 | | 26 | |
| 09 | | 27 | |
| 10 | | 28 | |
| 11 | | 29 | |
| 12 | | 30 | |
| 13 | | 31 | |
| 14 | | 32 | |
| 15 | | 33 | |
| 16 | | 34 | |
| 17 | | 35 | |
| 18 | | 36 | |
| 19 | | | |

| REV: | ECM INFORMATION: | TITLE: | SHEET No. |
|---|---|---|---|
| **Y2** | ECM No: **107985**<br>DATE: **10/25/2024** | **KK 100 HEADER ASSEMBLY<br>FLAT RIGHT ANGLE<br>BREAKAWAY** | **- 15 -** |

| DOCUMENT NUMBER: | CREATED / REVISED BY: | CHECKED BY: | APPROVED BY: |
|---|---|---|---|
| **SD- 42377-001** | **BAPPELDORN** | **MKIPPER** | **FSMITH** |

| A-42377-1270 / 1304 | |
|---|---|
| HEADER NUMBER: | 42312-0036 |
| PIN NUMBER: | 42663-BHA154 |
| PIN LENGTH: L | .590 / 14.99 |
| MATING LENGTH: M | .343 / 8.71 |
| GOLD POINT: G | N/A |
| PIN HEIGHT: Y | .070 / 1.78 |
| **PC TAIL LENGTH: P** | **.055 +/- .025**<br>**1.40 +/- 0.64** |
| TIN: T | OVERALL |
| CKTS: | 2-36 |
| KINKS: | NONE |
| REMOVED BACKWALLS: | NONE |
| VOIDED CKTS: | 2 |
| PACKAGING: | BULK PK-40873-0041 |

| CKTS | MATERIAL NUMBER | CKTS | MATERIAL NUMBER |
|---|---|---|---|
| 02 | | 20 | |
| 03 | 42377-1271 | 21 | |
| 04 | | 22 | |
| 05 | | 23 | |
| 06 | | 24 | |
| 07 | | 25 | |
| 08 | | 26 | |
| 09 | | 27 | |
| 10 | | 28 | |
| 11 | | 29 | |
| 12 | | 30 | |
| 13 | | 31 | |
| 14 | | 32 | |
| 15 | | 33 | |
| 16 | | 34 | |
| 17 | | 35 | |
| 18 | | 36 | |
| 19 | | | |

| ✓ A-42377-1305/1339 | |
|---|---|
| HEADER NUMBER: | 42312-0036 |
| PIN NUMBER: | 42663-BYA154 |
| PIN LENGTH: L | .650/16.51 |
| MATING LENGTH: M | .394/10.01 |
| GOLD POINT: G | N/A |
| PIN HEIGHT: Y | .050/1.27 |
| PC TAIL LENGTH: P | .089/2.26 |
| TIN: T | OVERALL |
| CKTS: | 2-36 |
| KINKS: | NONE |
| REMOVED BACKWALLS: | NONE |
| VOIDED CKTS: | NONE |
| PACKAGING: | BULK PK-40873-0041 |

| CKTS | MATERIAL NUMBER | CKTS | MATERIAL NUMBER |
|---|---|---|---|
| 02 | 42377-1305 | 20 | |
| 03 | | 21 | |
| 04 | | 22 | |
| 05 | | 23 | |
| 06 | 42377-1309 | 24 | |
| 07 | | 25 | |
| 08 | | 26 | |
| 09 | | 27 | |
| 10 | | 28 | |
| 11 | | 29 | |
| 12 | | 30 | |
| 13 | | 31 | |
| 14 | | 32 | |
| 15 | | 33 | |
| 16 | | 34 | |
| 17 | | 35 | |
| 18 | | 36 | |
| 19 | | | |

| REV: | ECM INFORMATION: | TITLE: | SHEET No. |
|---|---|---|---|
| **Y2** | ECM No: **107985**<br>DATE: **10/25/2024** | **KK 100 HEADER ASSEMBLY**<br>**FLAT RIGHT ANGLE**<br>**BREAKAWAY** | **- 16 -** |

| DOCUMENT NUMBER: | CREATED / REVISED BY: | CHECKED BY: | APPROVED BY: |
|---|---|---|---|
| **SD- 42377-001** | **BAPPELDORN** | **MKIPPER** | **FSMITH** |

| ✓ A-42377-1340/1358 | |
|---|---|
| HEADER NUMBER: | 42312-0036 |
| PIN NUMBER: | 42663-AFB208 |
| PIN LENGTH: L | .475/12.07 |
| MATING LENGTH: M | .195/4.95 |
| GOLD POINT: G | .150/3.81 |
| PIN HEIGHT: Y | .058/1.47 |
| PC TAIL LENGTH: P | .093/2.36 |
| TIN: T | .100/2.54 |
| CKTS: | 18-36 |
| KINKS: | NONE |
| REMOVED BACKWALLS: | NONE |
| VOIDED CKTS: | 2, 4, 5, 6, 7, 9, 11, 12, 13, 14, 16, 18 |
| PACKAGING: | BULK PK-40873-0041 |

| CKTS | MATERIAL NUMBER | CKTS | MATERIAL NUMBER |
|---|---|---|---|
| | | 20 | |
| | | 21 | |
| | | 22 | |
| | | 23 | |
| | | 24 | |
| | | 25 | |
| | | 26 | |
| | | 27 | |
| | | 28 | |
| | | 29 | |
| | | 30 | |
| | | 31 | |
| | | 32 | |
| | | 33 | |
| | | 34 | |
| | | 35 | |
| 18 | | 36 | |
| 19 | 42377-1341 | | |

| ✓ A-42377-1359/1393 | |
|---|---|
| HEADER NUMBER: | 42312-0036 |
| PIN NUMBER: | 42663-CJA154 |
| PIN LENGTH: L | .700 / 17.78 |
| MATING LENGTH: M | .394/10.01 |
| GOLD POINT: G | N/A |
| PIN HEIGHT: Y | .050/1.27 |
| PC TAIL LENGTH: P | .135 / 3.43 |
| TIN: T | OVERALL |
| CKTS: | 2-36 |
| KINKS: | PER SMES-42003 |
| REMOVED BACKWALLS: | NONE |
| VOIDED CKTS: | NONE |
| PACKAGING: | BULK PK-40873-0041 |

| CKTS | MATERIAL NUMBER | CKTS | MATERIAL NUMBER |
|---|---|---|---|
| 02 | 42377-1359 | 20 | |
| 03 | | 21 | |
| 04 | | 22 | |
| 05 | | 23 | |
| 06 | 42377-1363 | 24 | |
| 07 | | 25 | |
| 08 | | 26 | |
| 09 | | 27 | |
| 10 | | 28 | |
| 11 | | 29 | |
| 12 | | 30 | |
| 13 | | 31 | |
| 14 | | 32 | |
| 15 | | 33 | |
| 16 | | 34 | |
| 17 | | 35 | |
| 18 | | 36 | |
| 19 | | | |

| REV: | ECM INFORMATION: | TITLE: | SHEET No. |
|---|---|---|---|
| **Y2** | ECM No: **107985**<br>DATE: **10/25/2024** | **KK 100 HEADER ASSEMBLY<br>FLAT RIGHT ANGLE<br>BREAKAWAY** | **- 17 -** |

| DOCUMENT NUMBER: | CREATED / REVISED BY: | CHECKED BY: | APPROVED BY: |
|---|---|---|---|
| **SD- 42377-001** | **BAPPELDORN** | **MKIPPER** | **FSMITH** |

| ✓ A-42377-1394/1428 | |
|---|---|
| HEADER NUMBER: | 42312-0036 |
| PIN NUMBER: | 42663-CJA154 |
| PIN LENGTH: L | .700 / 17.78 |
| MATING LENGTH: M | .394/10.01 |
| GOLD POINT: G | N/A |
| PIN HEIGHT: Y | .050/1.27 |
| PC TAIL LENGTH: P | .135 / 3.43 |
| TIN: T | OVERALL |
| CKTS: | 2-36 |
| KINKS: | NONE |
| REMOVED BACKWALLS: | NONE |
| VOIDED CKTS: | NONE |
| PACKAGING: | BULK PK-40873-0041 |

| CKTS | MATERIAL NUMBER | CKTS | MATERIAL NUMBER |
|---|---|---|---|
| 02 | 42377-1394 | 20 | |
| 03 | | 21 | |
| 04 | | 22 | |
| 05 | | 23 | |
| 06 | | 24 | |
| 07 | | 25 | |
| 08 | | 26 | |
| 09 | | 27 | |
| 10 | | 28 | |
| 11 | | 29 | |
| 12 | | 30 | |
| 13 | | 31 | |
| 14 | | 32 | |
| 15 | | 33 | |
| 16 | | 34 | |
| 17 | | 35 | |
| 18 | | 36 | |
| 19 | | | |

| ✓ A-42377-1429 | |
|---|---|
| HEADER NUMBER: | 42312-0036 |
| PIN NUMBER: | 42663-ECA154 |
| PIN LENGTH: L | .880 / 22.35 |
| MATING LENGTH: M | .600/15.24 |
| GOLD POINT: G | N/A |
| PIN HEIGHT: Y | .050/1.27 |
| PC TAIL LENGTH: P | .116 / 2.95 |
| TIN: T | OVERALL |
| CKTS: | 5-36 |
| KINKS: | NONE |
| REMOVED BACKWALLS: | NONE |
| VOIDED CKTS: | 2,3,4 |
| PACKAGING: | BULK PK-40873-0041 |

| CKTS | MATERIAL NUMBER | CKTS | MATERIAL NUMBER |
|---|---|---|---|
| | | 20 | |
| | | 21 | |
| | | 22 | |
| 05 | 42377-1429 | 23 | |
| 06 | | 24 | |
| 07 | | 25 | |
| 08 | | 26 | |
| 09 | | 27 | |
| 10 | | 28 | |
| 11 | | 29 | |
| 12 | | 30 | |
| 13 | | 31 | |
| 14 | | 32 | |
| 15 | | 33 | |
| 16 | | 34 | |
| 17 | | 35 | |
| 18 | | 36 | |
| 19 | | | |

| REV: | ECM INFORMATION: | TITLE: | SHEET No. |
|---|---|---|---|
| **Y2** | ECM No: **107985**<br>DATE: **10/25/2024** | **KK 100 HEADER ASSEMBLY<br>FLAT RIGHT ANGLE<br>BREAKAWAY** | **- 18 -** |

| DOCUMENT NUMBER: | CREATED / REVISED BY: | CHECKED BY: | APPROVED BY: |
|---|---|---|---|
| **SD- 42377-001** | **BAPPELDORN** | **MKIPPER** | **FSMITH** |