CM5740Z171R-10

RoHS

PHYSICAL DIMENSIONS:

A	14.48 [.570]	± 0.23 [.009]
B	10.03 [.395]	± 0.15 [.006]
B_1	11.05 [.435]	MAX
C	9.32 [.367]	± 0.15 [.006]
C_1	10.49 [.413]	MAX.
D	4.06 [.160]	± 0.13 [.005]
E	2.54 [.100]	± 0.13 [.005]
E_1	3.43 [.135]	± 0.13 [.005]

WIRE:

T_1	3.56 [.140]	± 0.25 [.010]
T_2	0.76 [.030]	TYP.
T_3	0.76 [.030]	TYP.

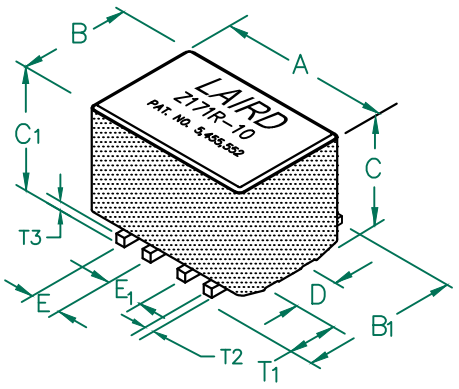

ELECTRICAL CHARACTERISTICS:

	Z @ 100MHz (Ω)	DCR (Ω)	Rated Current
Nominal	170		
Minimum	128		
Maximum	–	0.001	20,000 mA

NOTES: UNLESS OTHERWISE SPECIFIED

1. TAPED AND REELED per CURRENT EIA SPECIFICATIONS 13" REELS, 375 PCS/REEL.
2. COMPONENTS SHOULD BE ADEQUATELY PREHEATED BEFORE SOLDERING.
3. REF. CARRIER TAPE SPECIFICATION CART5740-6P.
4. TERMINATION FINISH IS 100% TIN.
5. THIS PART HAS NO PIN POLARITY.
6. OPERATION TEMPERATURE (INCLUDING SELF-HEATING): -40 ~ +125°C.

Z vs. FREQUENCY (C,O,N)

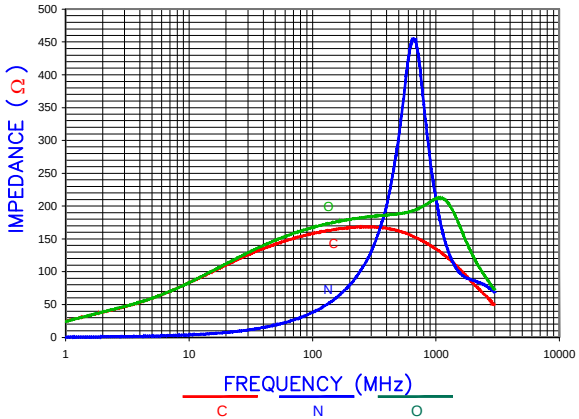

Z, R , XL vs. FREQUENCY

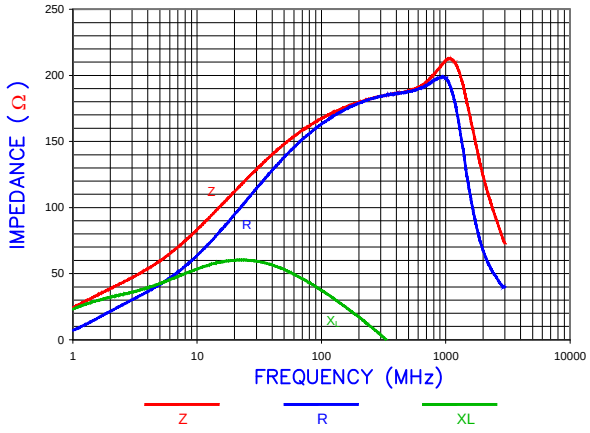

AGILENT E4991A RF Impedance/Material Analyzer
HP 16194A Test Fixture. TEST REF. 3007

LAND PATTERNS FOR REFLOW SOLDERING

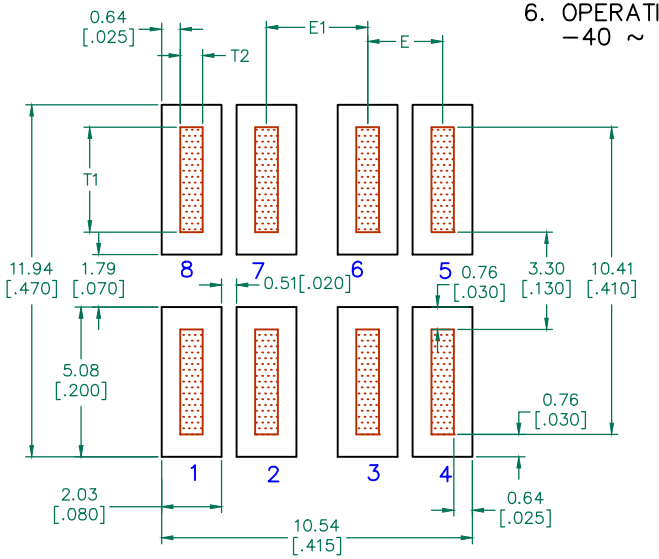

EQUIVALENT CIRCUIT NO POLARITY

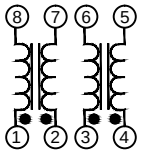

RECOMMENDED SOLDERING CONDITIONS

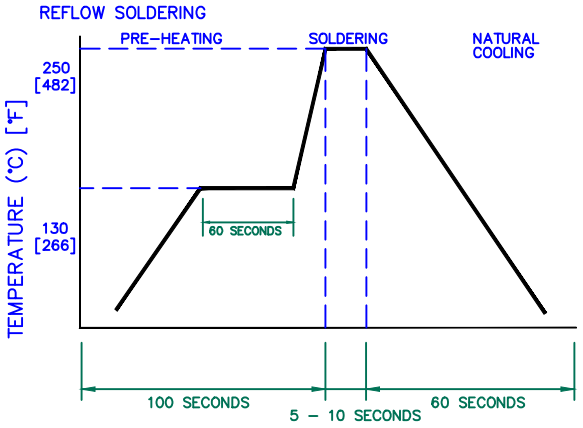

REV	DESCRIPTION	DATE	INT
D	ADD NOTE 6	08/30/12	QIU
C	UPDATE COMPANY LOGO & KAPTON LABEL ADD EQUIVALENT CIRCUIT	11/12/08	JRK
B	UPDATE COMPANY LOGO	01/08/08	JRK
A	ORIGINAL DRAFT	06/11/04	JRK

DIMENSIONS ARE IN mm (INCHES).

This print is the property of Laird Tech. and is loaned in confidence subject to return upon request and with the understanding that no copies shall be made without the written consent of Laird Tech. All rights to design or invention are reserved.

Laird

PROJECT/PART NUMBER: CM5740Z171R-10	REV: D	PART TYPE: ASSEMBLY	DRAWN BY: JRK
DATE: 06/11/04	SCALE: NTS	SHEET: 1 of 2	
CAD #: CM5740Z171R-10-D-1	TOOL #: H0570		

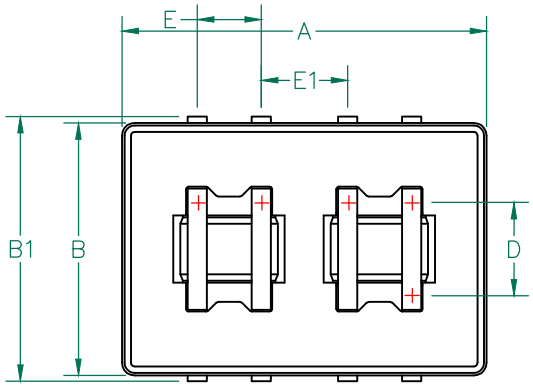

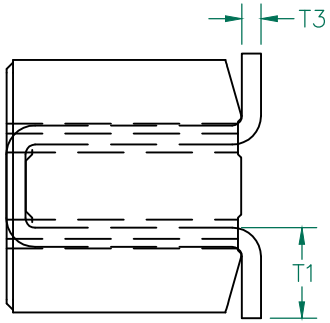

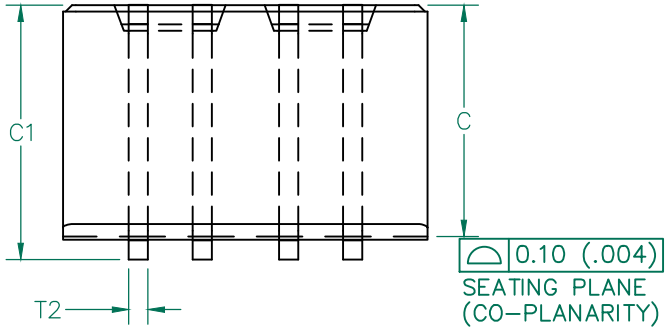

RoHS

SCALE DRAWING 1:1

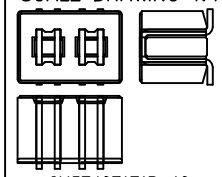

CM5740Z171R-10

ELECTRICAL TESTING

TEST:	GROSS Z	GROSS Z
# TURNS	1	1
AWG	22	22
FREQUENCY	25 MHz	100 MHz
NOMINAL	– Ω	170 Ω
MINIMUM	– Ω	128 Ω
WEIGHT/1000	5.85 kgs.	12.89 lbs.

DIMENSIONS:

A	14.48 [.570]	±	0.23 [.009]
B	10.03 [.395]	±	0.15 [.006]
B_1	11.05 [.435]		MAX
C	9.32 [.367]	±	0.15 [.006]
C_1	10.49 [.413]		MAX.
D	4.06 [.160]	±	0.13 [.005]
E	2.54 [.100]	±	0.13 [.005]
E_1	3.43 [.135]	±	0.13 [.005]

WIRE DIMENSIONS:

T_1	3.56 [.140]	±	0.25 [.010]
T_2	0.76 [.030]		TYP.
T_3	0.76 [.030]		TYP.

NOTES: UNLESS OTHERWISE SPECIFIED

1. WIRE: REFERENCE STEWARD WIRE PURCHASE SPEC. W0040-61.
2. IMPEDANCE VALUES ARE GROSS, MEASURED USING W0040-61 WIRE PLACED AGAINST END OF SLOT w/ NO D.C. BIAS.
3. REFERENCE STEWARD CORE 24H0570-600.
4. NO MORE THAN 0.18 [.007] DIFFERENCE FROM THE LONGEST TO THE SHORTEST CONDUCTOR ON ONE SIDE.
5. TERMINATION FINISH IS 100% TIN.
6. THIS PART HAS NO PIN POLARITY.

DIMENSIONS ARE IN mm (INCHES).

REV	DESCRIPTION	DATE	INT
D	ADD NOTE 6	08/30/12	QIU
C	UPDATE COMPANY LOGO & KAPTON LABEL ADD EQUIVALENT CIRCUIT	11/12/08	JRK
B	UPDATE COMPANY LOGO	01/08/08	JRK
A	ORIGINAL DRAFT	06/11/04	JRK

This print is the property of Laird Tech. and is loaned in confidence subject to return upon request and with the understanding that no copies shall be made without the written consent of Laird Tech. All rights to design or invention are reserved.

Laird

PROJECT/PART NUMBER:	REV	PART TYPE:	DRAWN BY:
CM5740Z171R-10	D	ASSEMBLY	JRK

DATE:	SCALE:	SHEET:
06/11/04	NTS	2 of 2

CAD #	TOOL #
CM5740Z171R-10-D-2	H0570