

Recommended PCB Layout
General Tolerance ±0.05
Solder Area

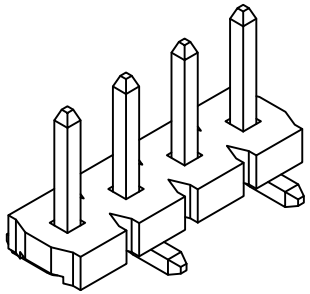

Number of Contacts	Dimensions	
	A	B
2	5.08	10.16
3	10.16	15.24
4	15.24	20.32
5	20.32	25.40
6	25.40	30.48
7	30.48	35.56
8	35.56	40.64
9	40.64	45.72
10	45.72	50.80
11	50.80	55.88
12	55.88	60.96
13	60.96	66.04
14	66.04	71.12
15	71.12	76.20

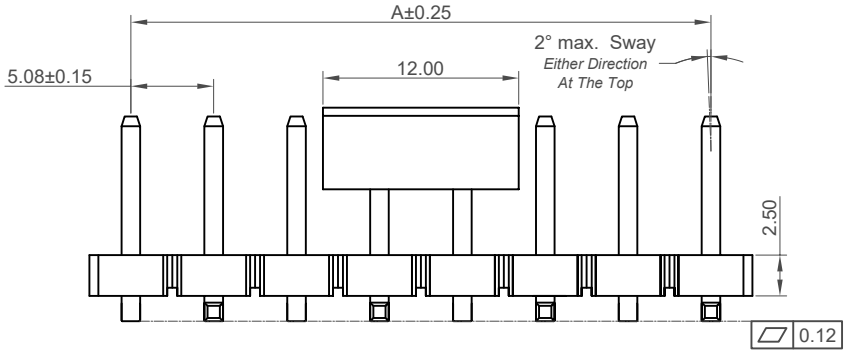

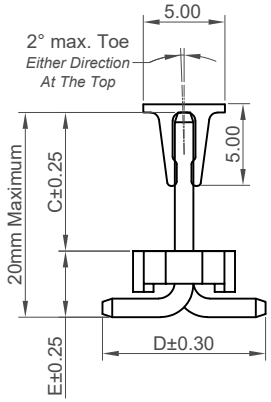

Specifications

Material
Insulator: LCP, UL94V-0
Contact：Brass

Plating
Contact:Tin All Over
Underplating: Nickel all over

Electrical
Current Rating: 7.9 Amp Per Pin
Contact Resistance: 30 mΩ max.
Insulation Resistance: 1500 MΩ min.
Dielectric Withstand Voltage: 1500 V AC

Mechanical & Environmental
Operating Temperature: -40°C to +105°C
Soldering Process
IR Reflow: 260°C for 10 sec.
Manual Solder: 350°C for 3-5 sec

Mates with (Subject to Pin Length)
BK015

Ordering Grid

BK010 — XX — C — XXXX — XXXX — XXXX — X

Request Samples and Quotation

No. of Contacts
02 to 15

Contact Plating
C= Tin All Over

Dimension C *(1/100mm) (Post Height)*
0850 = 8.50mm ***(Standard)***
Or specify Custom Post Height
(Maximum 1500=15.00mm)
(Minimum 0050=0.50mm)

Dimension D *(1/100mm) (Footprint Width)*
1000 =10.00mm ***(Standard)***
Or specify Custom Footprint Width
(Minimum 0850=8.50mm)
(Tooling charge may apply)

Dimension E *(1/100mm) (PCB to Top of Insulator)*
0405 = 4.05mm ***(Standard-Minimum)***
Or specify custom dimension

Packing Options
E = Tube with Cap ***(Standard)***
(Available from 3 contacts and above)
D = Tube (Available from 3 contacts and above)
G = Box (Only available in 2 contacts)

Part Number		Product Description						
BK010		5.08mm Pitch Pin Header, Single Row, Surface Mount, Vertical						
Drawing Date								
10th August 2017								
By	KY	Tolerances (Except as Noted)		Units: Metric (mm)	RoHS COMPLIANT 2011/65/EU Deca-BDE	This drawing is confidential and copyright of Global Connector Technology, Ltd (GCT). This drawing must not be copied or disclosed without written consent. E & OE	GCT www.gct.co	
Detail	Drawing Release	Length	Angle					
		X. ± 0.30	X.° ± 5°					
		X.X ± 0.25	X.X° ± 3°					
Revision	A1	X.XX ± 0.15	X.XX° ± 2°	3rd Angle Projection			Not to Scale	Drawn By CC
Date	19/05/25	X.XXX ± 0.10	X.XXX° ± 1°					Sheet No. 1/1