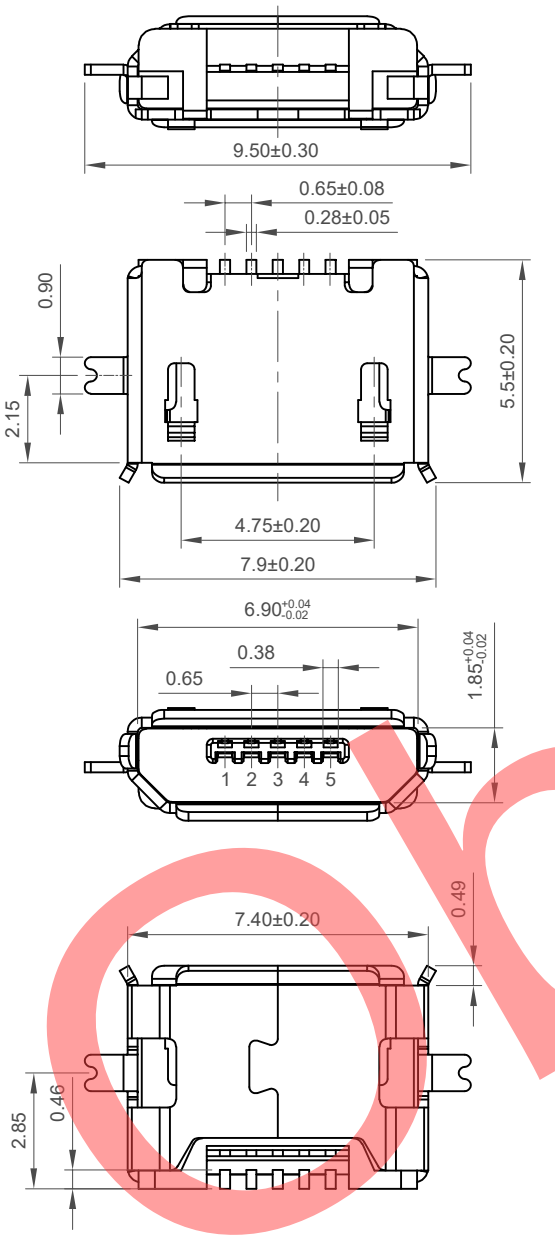

PCB Mount Orientation

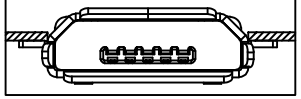

Designed to comply with physical, electrical and environmental requirements of Micro USB Standard (USB2.0).

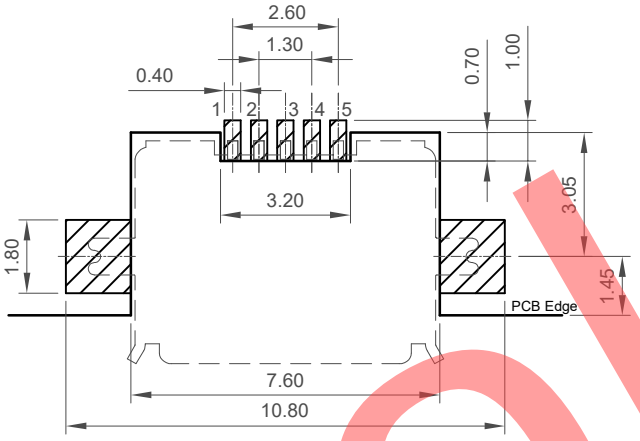

Recommended PCB Layout

as viewed from component side General Tolerance: ±0.05

Solder Area Component Outline

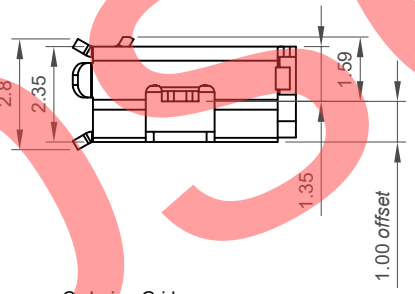

Ordering Grid

USB3070	–	30	–	A
		Contact Plating 30 = 30u" Gold		Packing Options A = Tape & Reel *(1.5K per Reel)*

Request Samples and Quotation

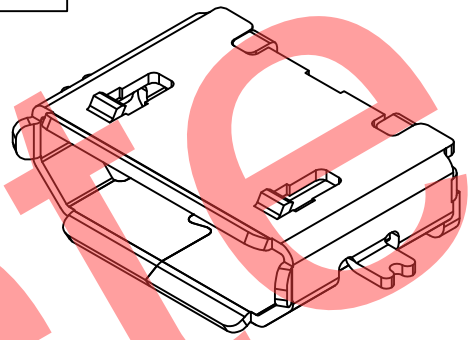

Specifications

Material
- Plastic Housing: LCP, UL94V-0, Black
- Contact Terminal: Copper Alloy
- Metallic Shell: Stainless Steel SUS 304 T = 0.25mm

Plating
- Underplating: 50µ" Nickel
- Contact Area: 30µ" Gold plating
- Solder Tails: Gold Flash
- Metallic Shell: Matte Tin

Electrical
- Voltage Rating: 30 V AC
- Current Rating: Signal (Pins 2,3,4): 1.0 A.
  Power (Pins1,5): 1.8A.
- Operating Temperature: -30°C to +85°C
- Contact Resistance: 30 mΩ max.
- Insulating Resistance: 1000 MΩ min.
- Dielectric Withstand Voltage: 500V AC/minute

Mechanical & Environmental
- Mating Force: 35N max.
- Unmating Force: Initial 10N min.
  Final 8N min after durability test
- Durability: 10,000 Cycles

Obsolete

Part Number	Product Description
USB3070	Micro USB Receptacle, Type B, Mid-Mount SMT, Right Angled, Bottom Mount, 1.00mm Offset, Without Peg
Drawing Date	
4th April 2011	

By	JZ
Detail	USB3070 X PCN
Revision	X
Date	23/06/25

Tolerances (Except as Noted): Length X.X ± 0.4, X.XX ± 0.25, X.XXX ± 0.05; Angle X.X° ± 2°, X.XX° ± 1°, X.XXX° ± 0.5°

Units: Metric (mm) — 3rd Angle Projection

RoHS COMPLIANT 2011/65/EU Deca-BDE

© This drawing is confidential and copyright of Global Connector Technology, Ltd (GCT). This drawing must not be copied or disclosed without written consent. E & OE

GCT www.gct.co

Not to Scale	Drawn By SA	Sheet No. 1/2

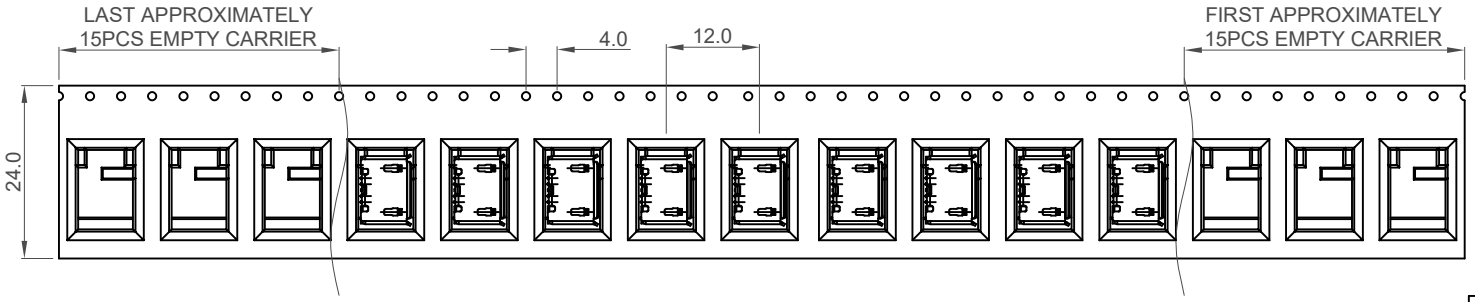

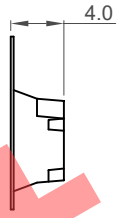

Products P/N	PCS/Reel	Reels/Carton	PCS/Carton
USB3070	1500	4	6000

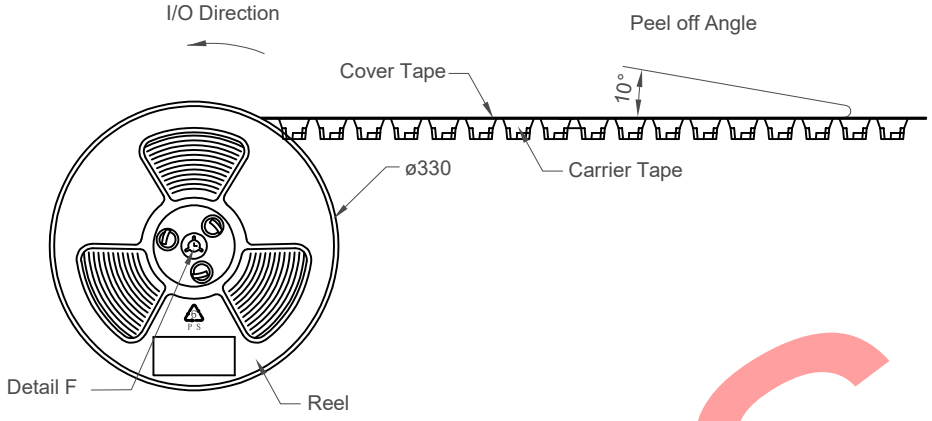

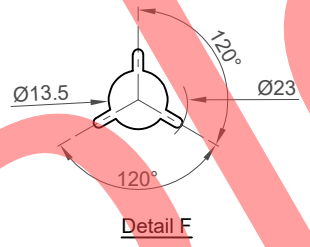

Notes:
1. Peeling off force of top tape: 0.1-1.3N
2. Part Conforms to EIA-481-C Standards
3. All dimensions in millimeters
4. 10 sprocket hole pitch cumulative tolerance±0.2mm

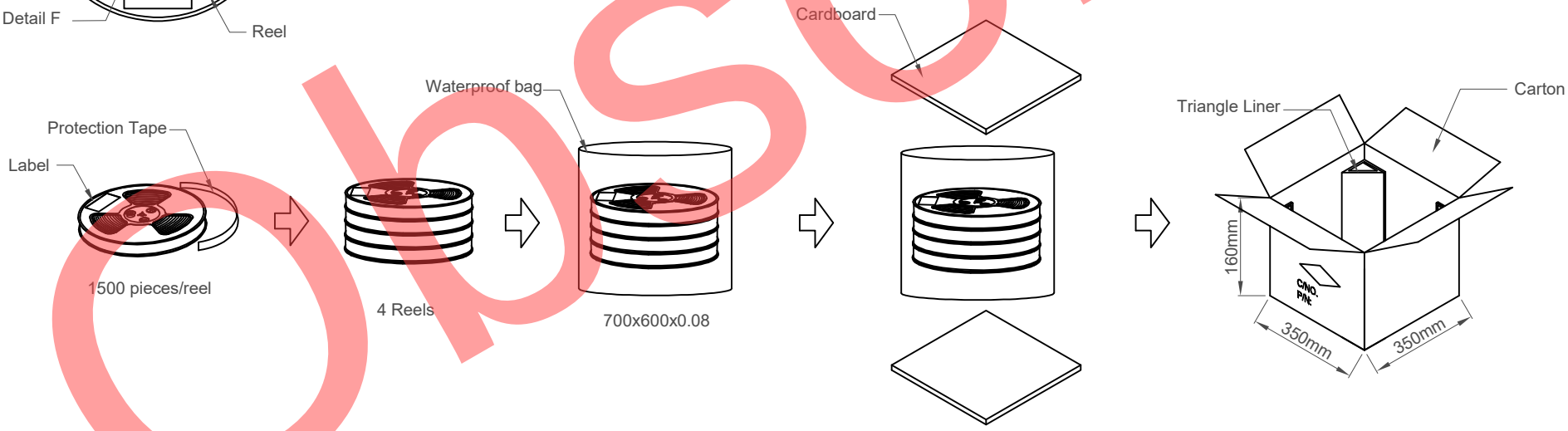

Obsolete

Part Number	Product Description
USB3070	Micro USB Receptacle, Type B, Mid-Mount SMT, Right Angled, Bottom Mount, 1.00mm Offset, Without Peg
Drawing Date: 4th April 2011	

By	JZ
Detail	USB3070 X PCN
Revision	X
Date	23/06/25

Tolerances (Except as Noted): Length, Angle
Units: Metric (mm)
3rd Angle Projection
RoHS COMPLIANT 2011/65/EU Deca-BDE

This drawing is confidential and copyright of Global Connector Technology, Ltd (GCT). This drawing must not be copied or disclosed without written consent. E & OE

GCT
www.gct.co

Not to Scale	Drawn By SA	Sheet No. 2/2