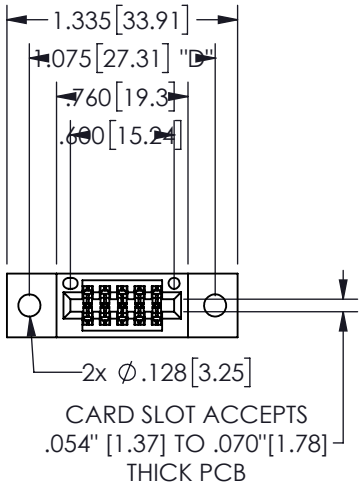

THIS IS A C.A.D. GENERATED DRAWING
DO NOT MAKE MANUAL REVISIONS TO MASTER.

ISSUE NUMBER
ORIGINAL ①

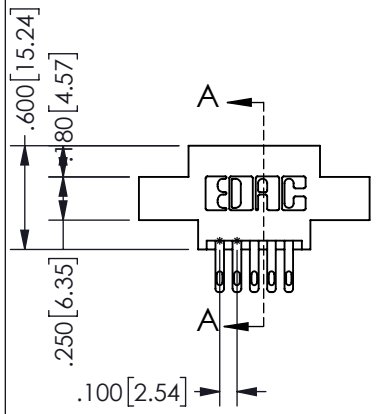

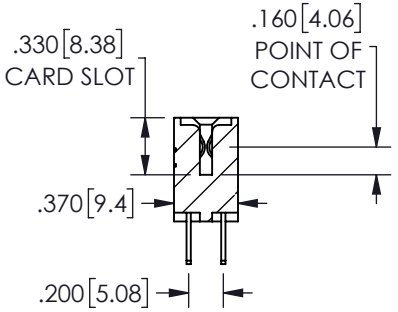

SECTION A-A

Contact Dimensions:
500-Wire Hole .050x.025(1.27x0.64) - Tail LG=.260(6.60)
.100 (2.54) Contact Spacing x .200 (5.08) Row Spacing

345/395 SERIES CARD EDGE CONNECTOR
PART NUMBER: 345-010-500-802

EDAC INC
TORONTO, ONTARIO
CANADA
YOUR CONNECTION TO QUALITY & SERVICE

THESE DRAWINGS AND SPECIFICATIONS ARE THE PROPERTY OF EDAC INC.,AND SHALL NOT BE REPRODUCED,OR COPIED OR USED AS THE BASIS FOR THE MANUFACTURE OR SALE OF APPARATUS WITHOUT WRITTEN PERMISSION.

ACAD REFERENCE NO.	345-ENG-MASTER
DRAWN: R.STA.MONICA	DATE:MAY.16/2017
CHECKED:	DATE:
SCALE: NTS	SHEET 1 OF 2
DRAWING NUMBER: 345-ENG-MASTER	ISSUE: 1

Contact Description:
559-90 Degree Bend (Code 541 Contacts)

THIS IS A C.A.D. GENERATED DRAWING
DO NOT MAKE MANUAL REVISIONS TO MASTER.

ISSUE NUMBER
ORIGINAL ①

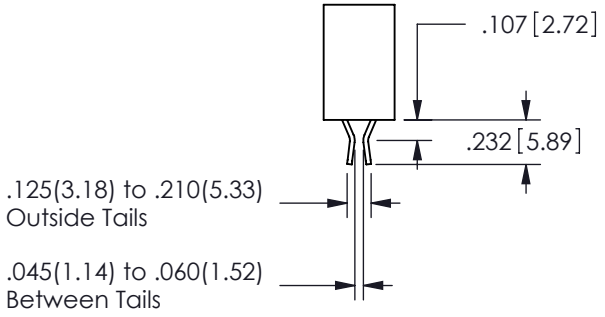

Contact Code 555

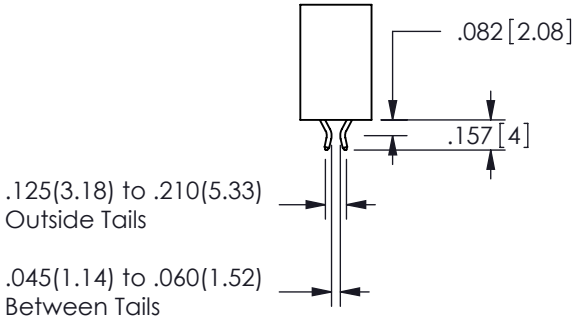

Contact Code 556

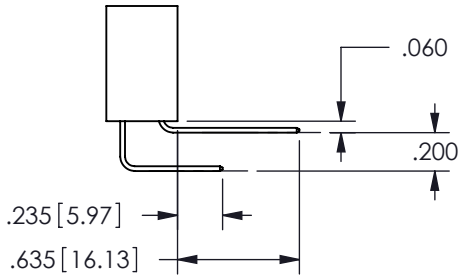

Contact Code 558

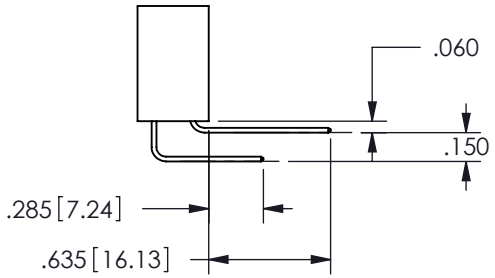

Contact Code 559

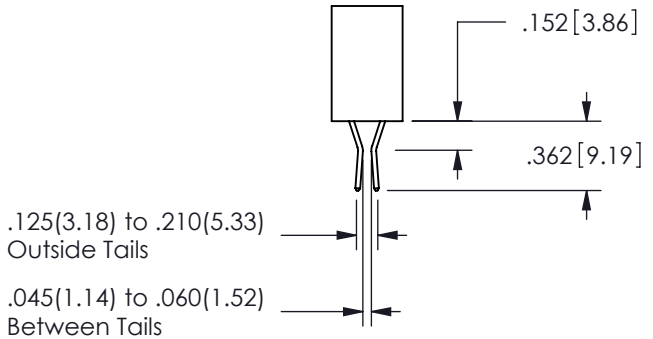

Contact Code 560

- INSULATOR MATERIAL: THERMOPLASTIC POLYESTER, UL 94V-0
- DAP MATERIAL AVAILABLE UPON REQUEST
- CONTACT MATERIAL; COPPER ALLOY
  CONTACT PLATING: GOLD ON THE MATING AREA, TIN PLATING ON THE CONTACT TAILS, NICKEL UNDERPLATE

345/395 SERIES CARD EDGE CONNECTOR
CONTACT CODE 555,556,558,559,560 DIMENSIONS

EDAC INC
TORONTO, ONTARIO
CANADA
YOUR CONNECTION TO QUALITY & SERVICE

THESE DRAWINGS AND SPECIFICATIONS ARE THE PROPERTY OF EDAC INC.,AND SHALL NOT BE REPRODUCED,OR COPIED OR USED AS THE BASIS FOR THE MANUFACTURE OR SALE OF APPARATUS WITHOUT WRITTEN PERMISSION.

ACAD REFERENCE NO.	345-ENG-MASTER	
DRAWN: R.STA.MONICA	DATE:MAY.16/2017	
CHECKED:	DATE:	
SCALE: 1:1	SHEET 2 OF 2	
DRAWING NUMBER 345-ENG-MASTER	ISSUE 1	