Contact Dimensions:
540-Wire Wrap .025 Sq. (0.64 Sq.) - Tail LG. =.560 (14.22)
.125 (3.18) Contact Spacing x .250 (6.35) Row Spacing

THIS IS A C.A.D. GENERATED DRAWING
DO NOT MAKE MANUAL REVISIONS TO MASTER.

ISSUE NUMBER
ORIGINAL ①

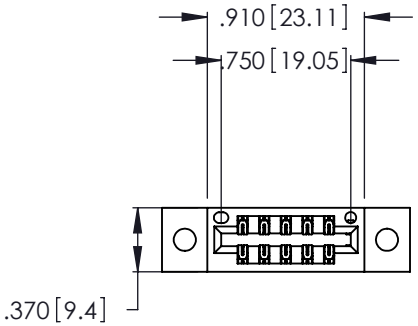

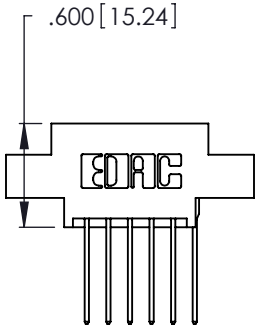

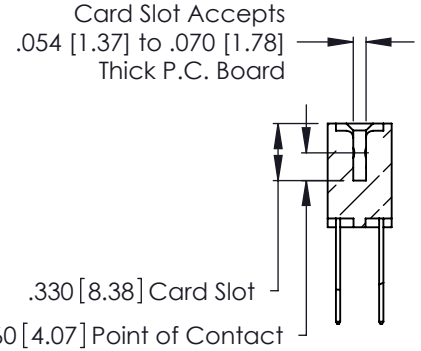

- INSULATOR MATERIAL: THERMOPLASTIC POLYESTER, UL 94V-0
- CONTACT MATERIAL; COPPER, NICKEL, TIN ALLOY CA-725
- CONTACT PLATING: GOLD ON THE MATING AREA, TIN-LEAD ON THE CONTACT TAILS, NICKEL UNDERPLATE

346/396 SERIES CARD EDGE CONNECTOR
PART NUMBER: 346-012-540-802

EDAC INC
TORONTO, ONTARIO
CANADA
YOUR CONNECTION TO QUALITY & SERVICE

THESE DRAWINGS AND SPECIFICATIONS ARE THE PROPERTY OF EDAC INC.,AND SHALL NOT BE REPRODUCED,OR COPIED OR USED AS THE BASIS FOR THE MANUFACTURE OR SALE OF APPARATUS WITHOUT WRITTEN PERMISSION.

ACAD REFERENCE NO.	346-ENG-MASTER		
DRAWN: J.LEE		DATE: APR. 22/09	
CHECKED:		DATE:	
SCALE: N.T.S		SHEET 1 OF 2	
DRAWING NUMBER		ISSUE	
346-ENG-MASTER		1	

THIS IS A C.A.D. GENERATED DRAWING
DO NOT MAKE MANUAL REVISIONS TO MASTER.

ISSUE NUMBER
ORIGINAL ①

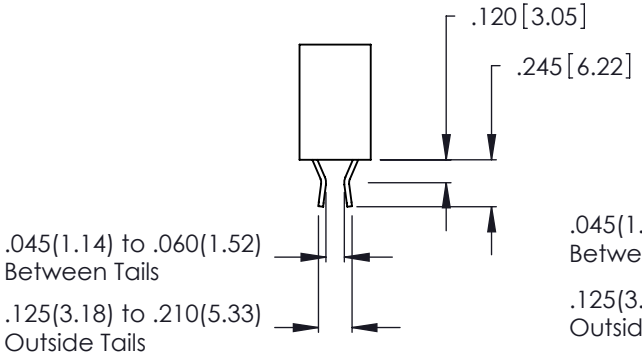

Contact Code 555

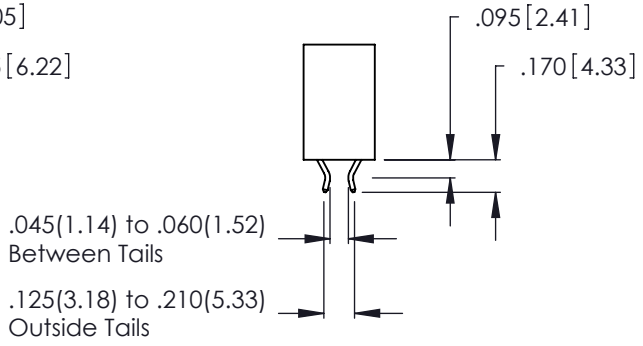

Contact Code 556

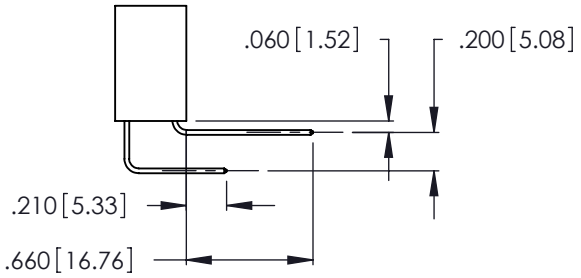

Contact Code 558

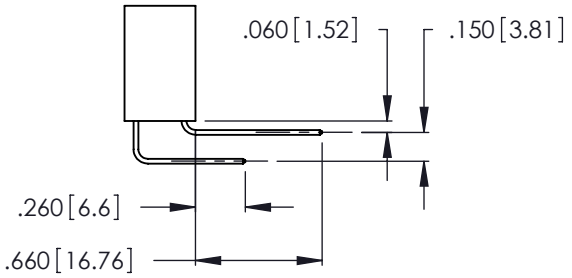

Contact Code 559

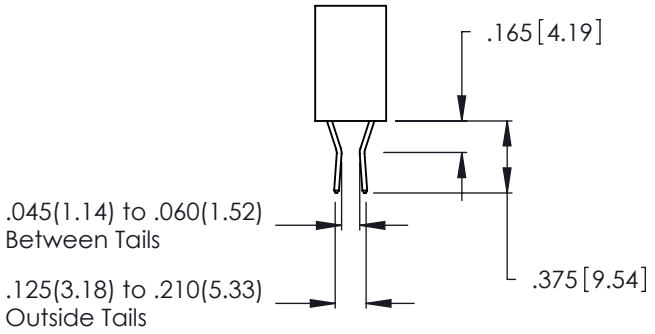

Contact Code 560

- INSULATOR MATERIAL: THERMOPLASTIC POLYESTER, UL 94V-0
- CONTACT MATERIAL; COPPER, NICKEL, TIN ALLOY CA-725
- CONTACT PLATING: GOLD ON THE MATING AREA, TIN-LEAD ON THE CONTACT TAILS, NICKEL UNDERPLATE

346/396 SERIES CARD EDGE CONNECTOR CONTACT CODE 555,556,558,559,560 DIMENSIONS

EDAC INC
TORONTO, ONTARIO
CANADA
YOUR CONNECTION TO QUALITY & SERVICE

THESE DRAWINGS AND SPECIFICATIONS ARE THE PROPERTY OF EDAC INC.,AND SHALL NOT BE REPRODUCED,OR COPIED OR USED AS THE BASIS FOR THE MANUFACTURE OR SALE OF APPARATUS WITHOUT WRITTEN PERMISSION.

ACAD REFERENCE NO.	346-ENG-MASTER		
DRAWN: J.LEE		DATE: APR. 22/09	
CHECKED:		DATE:	
SCALE: 1:1		SHEET 2 OF 2	
DRAWING NUMBER	346-ENG-MASTER	ISSUE	1