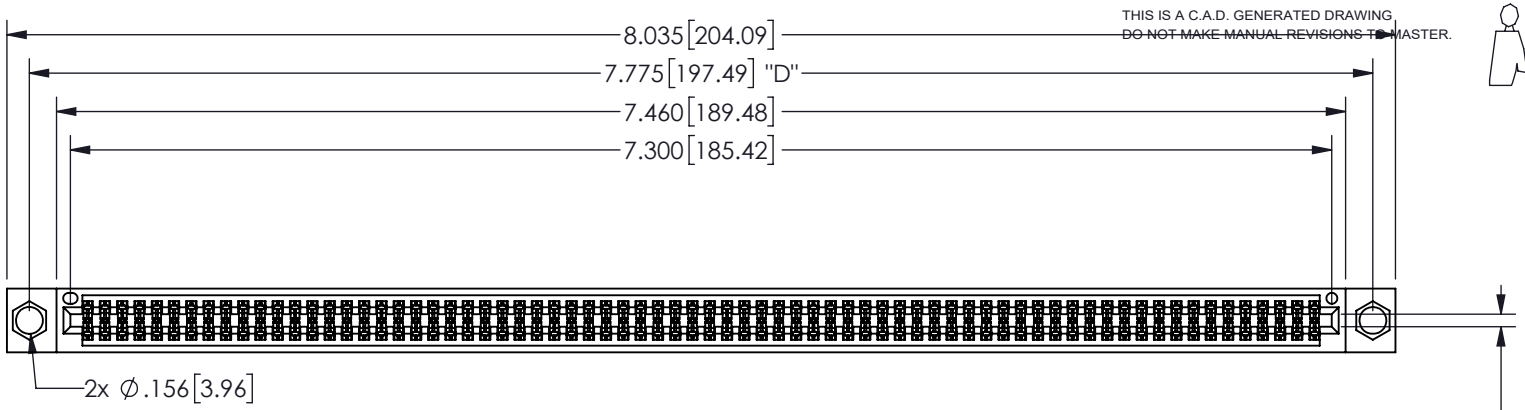


| ISSUE NUMBER | |
|---|---|
| ORIGINAL | 1 |

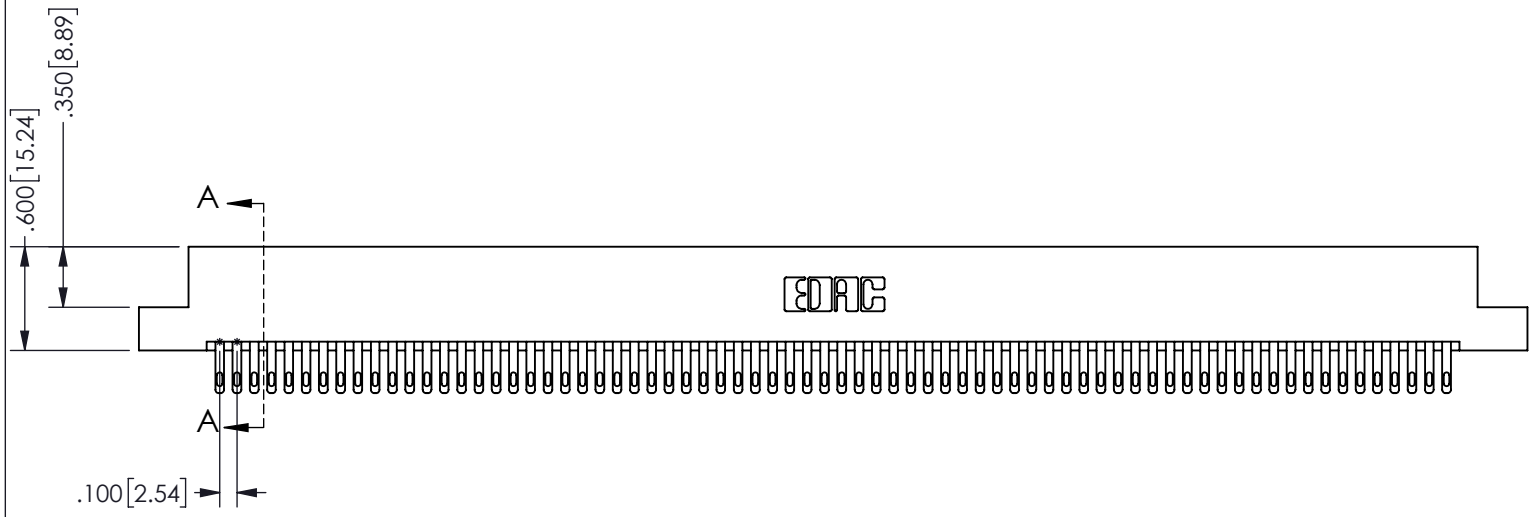


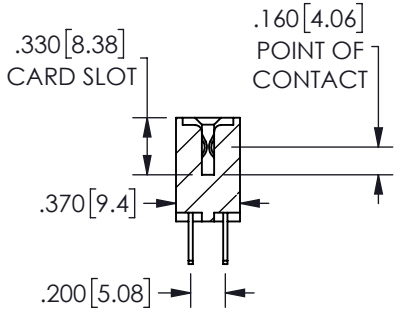


SECTION A-A

**Contact Dimensions:**
**500-Wire Hole .050x.025(1.27x0.64) - Tail LG=.260(6.60)**
**.100 (2.54) Contact Spacing x .200 (5.08) Row Spacing**

345/395 SERIES CARD EDGE CONNECTOR
PART NUMBER: 345-144-500-204

EDAC INC
TORONTO, ONTARIO
CANADA
YOUR CONNECTION TO QUALITY & SERVICE

THESE DRAWINGS AND SPECIFICATIONS ARE THE PROPERTY OF EDAC INC.,AND SHALL NOT BE REPRODUCED,OR COPIED OR USED AS THE BASIS FOR THE MANUFACTURE OR SALE OF APPARATUS WITHOUT WRITTEN PERMISSION.

| | |
|---|---|
| ACAD REFERENCE NO. | 345-ENG-MASTER |
| DRAWN: R.STA.MONICA | DATE:MAY.16/2017 |
| CHECKED: | DATE: |
| SCALE: NTS | SHEET 1 OF 2 |
| DRAWING NUMBER: 345-ENG-MASTER | ISSUE: 1 |

**Contact Description:**
**559-90 Degree Bend (Code 541 Contacts)**

THIS IS A C.A.D. GENERATED DRAWING
DO NOT MAKE MANUAL REVISIONS TO MASTER.

| ISSUE NUMBER |
|---|
| ORIGINAL ① |

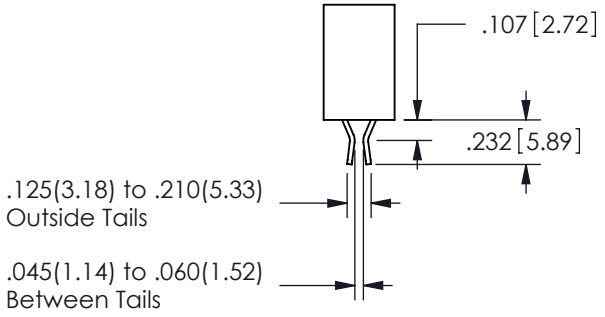


**Contact Code 555**

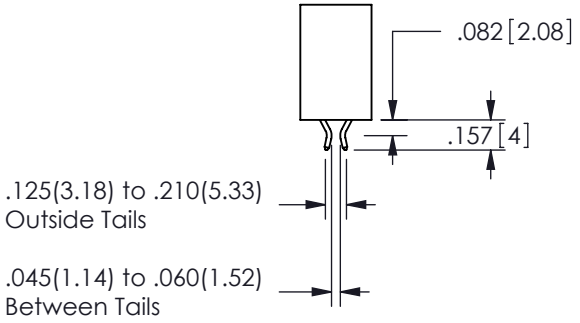


**Contact Code 556**

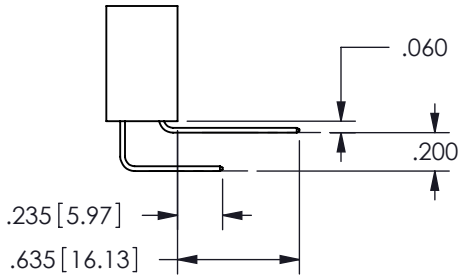


**Contact Code 558**

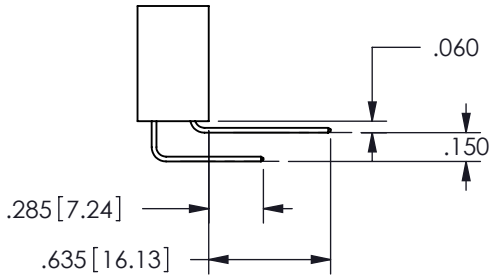


**Contact Code 559**

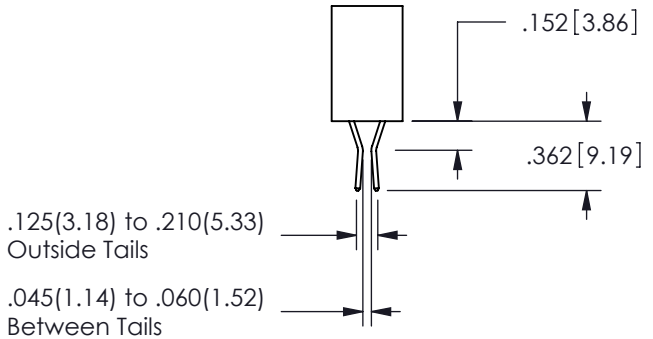


**Contact Code 560**

- INSULATOR MATERIAL: THERMOPLASTIC POLYESTER, UL 94V-0
- DAP MATERIAL AVAILABLE UPON REQUEST
- CONTACT MATERIAL; COPPER ALLOY
  CONTACT PLATING: GOLD ON THE MATING AREA, TIN PLATING ON THE CONTACT TAILS, NICKEL UNDERPLATE

345/395 SERIES CARD EDGE CONNECTOR
CONTACT CODE 555,556,558,559,560 DIMENSIONS

EDAC INC
TORONTO, ONTARIO
CANADA
YOUR CONNECTION TO QUALITY & SERVICE

THESE DRAWINGS AND SPECIFICATIONS ARE THE PROPERTY OF EDAC INC.,AND SHALL NOT BE REPRODUCED,OR COPIED OR USED AS THE BASIS FOR THE MANUFACTURE OR SALE OF APPARATUS WITHOUT WRITTEN PERMISSION.

| | | |
|---|---|---|
| ACAD REFERENCE NO. | 345-ENG-MASTER | |
| DRAWN: R.STA.MONICA | DATE:MAY.16/2017 | |
| CHECKED: | DATE: | |
| SCALE: 1:1 | SHEET 2 OF 2 | |
| DRAWING NUMBER | ISSUE | |
| 345-ENG-MASTER | 1 | |