UNLESS OTHERWISE SPECIFIED ALL DIMENSIONS ARE IN MM

ISSUE	CHANGE DESCRIPTION	DATE	APPROVED
1	FIRST ISSUE	18 Sep 02	SN
2	D17506	17-Feb-25	SM

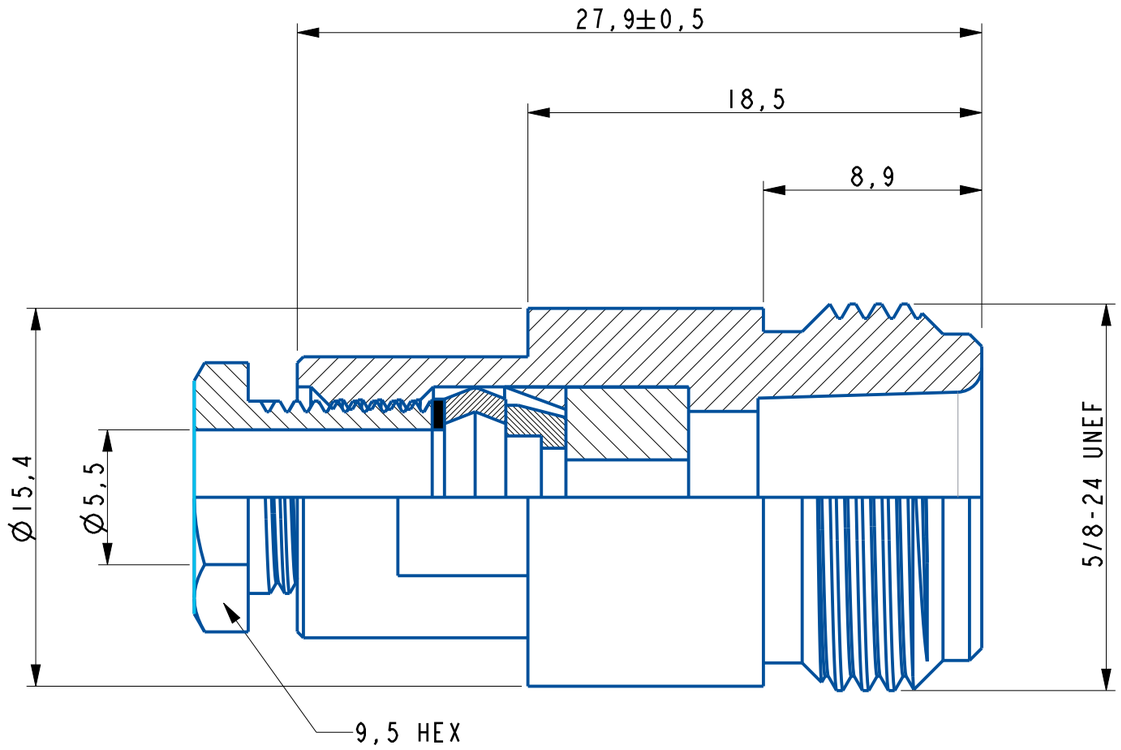

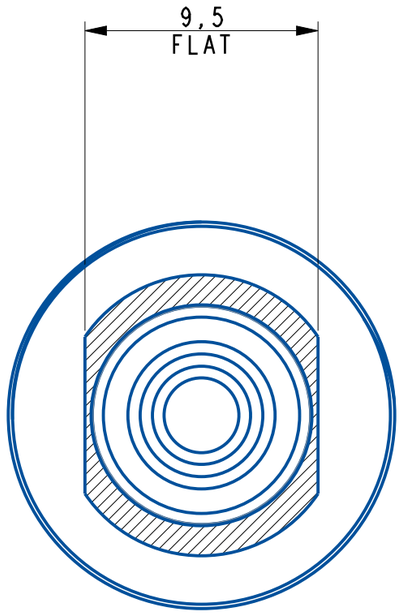

ELECTRICAL CHARACTERISTICS:

NOMINAL IMPEDANCE: 50Ω
FREQUANCY RANGE: DC TO 11 GHz
VSWR: 1.35:1 MAX.
INSERTION LOSS: 0.17 dB MAX.
OPERATING VOLTAGE (RMS): 1500 V MAX. AT SEA LEVEL
DWV: 2500 V MAX. AT SEA LEVEL
CONTACT RESISTANCE: 1.0 mΩ MAX.
INSULATION RESISTANCE: 5000 MΩ MIN.

MECHANICAL CHARACTERISTICS:

MATING CYCLES: 500 CYCLES MIN.
INTERFACE DIMENSIONS: CONFORMS TO MIL-C-39012

ENVIRONMENTAL CHARACTERISTICS:

TEMPERATURE RANGE: -65 °C TO +165 °C

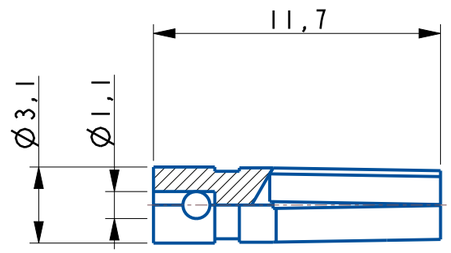

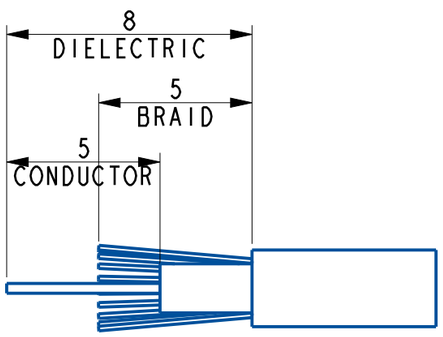

CABLE STRIP DETAILS

	PART	MATERIAL	FINISH
1	BODY	BRASS	NICKEL
2	DIELECTRIC	PTFE	WHITE
3	CONTACT	BRASS	GOLD
4	GASKET	RUBBER	RED
5	TOP HAT	BRASS	NICKEL
6	CLAMP NUT	BRASS	NICKEL
7	WASHER	BRASS	NICKEL

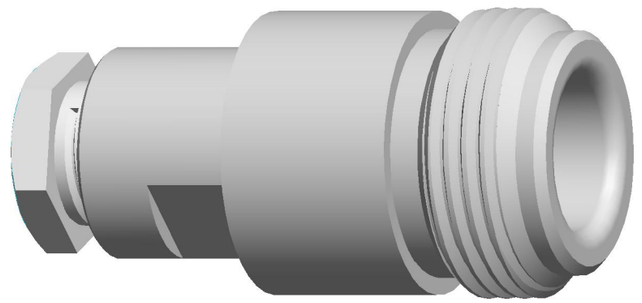

SCALE 3:1

DRAWN TO BS 8888
TOLERANCES (unless specified): ISO 2768mK

DRAWN BY: M.BARRACLOUGH

CAGE CODE: U1718

THIS DRAWING IS COPYRIGHT AND IS ISSUED ON CONDITION THAT IT IS NOT COPIED, REPRODUCED OR DISCLOSED TO A THIRD PARTY WITHOUT PRIOR WRITTEN CONSENT OF CINCH LTD.
ATTENTION IS DRAWN TO THE FACT THE ARTICLE DISCLOSED MAY BE COVERED BY BRITISH OR FOREIGN PATENTS, GRANTED OR PENDING OR REGISTERED DESIGN.

cinch CONNECTIVITY SOLUTIONS a bel group
CINCH CONNECTORS LTD
SHIREOAKS ROAD, WORKSOP
S80 3HA (01909) 474131

DRAWING TITLE: N CLAMP JACK FOR RG58

DRAWING NUMBER: VNS30-2051

SCALE: NTS

SHEET: 1 OF 1

A3