DIMENSIONS

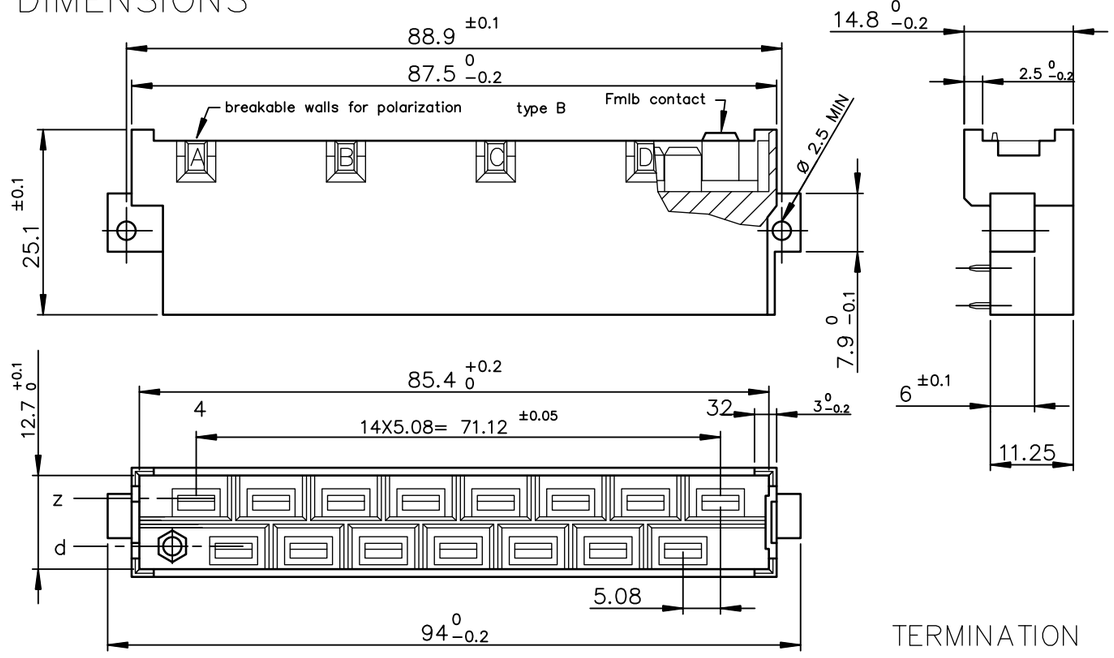

TERMINATION

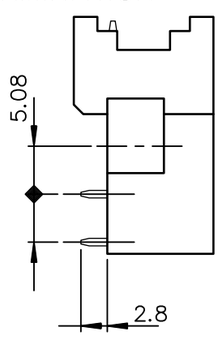

ELECTRICAL DATA

–Current at AMB.	15 A at 20° / 10 A at 70°
–Contact resistance	≤8mΩ according to DIN 41640 Teil 4 test 2a
–Insulation resistance	$\geq 10^6$ MΩ according to DIN 41640 teil 7 test 3a
–TEST VOLTAGE	according to DIN 41640 teil 21
contact/contact	3100 V
contact/ground	3100 V
grounding pin position	Z 32

MECHANICAL DATA

–Insertion force	≤90N
–Mechanical endurance	500 matings unmatings according to DIN41640 teil 21
–Material insulator	Polycarbonate UL94V0
–Material contacts	Copper alloy
–Finishing contact surface	Silver or Lead Free
–Finishing termination	Silver or Lead Free
–Schock	≤16mΩ according to DIN 41640 Teil 14 test 6c
–Vibration	10–2000Hz/20g according to DIN 41640 Teil 15

ENVIRONMENTAL DATA

–Climatic category	According to DIN 41612 – class 1
–Corrosion	According to DIN 41612 – class 1

PERFORMANCES AS PER DIN 41612 STYLE H 15 CLASS 1

P.C. CARD DRILLING (scale 1.2)

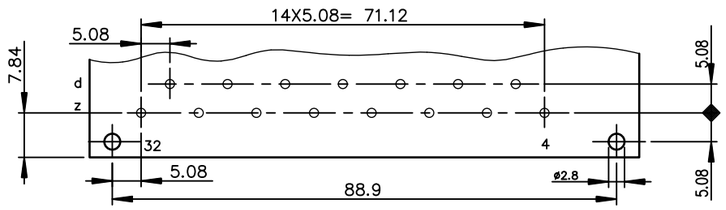

LEAD–FREE PART–NUMBER	5159	029	15	23	□□□	LF

STYLE H

NUMBER OF CONTACTS

TERMINATION
Angled spills

PLATING
Silver over nickel — 660
Lead–free over nickel — 440

LEAD–FREE

NOTE RoHS INFORMATION

– The "LF" products meet European Union Directives and other country regulations as described in GS–22–008.
– The housing will whistand exposure to 260°C peak temperature for 3.5 seconds in a wave solder application with a 1.6mm minimum thick circuit board.
– For the right angled versions , like the current leaded versions, it's recommended to use high temperature adhesive or metallic device, to protect the nearlest plastic part in contact with of the solder wave, to avoid any visual plastic deterioration.

European Views

mat'l. code				surface ISO 1302		tolerance ISO 406 ISO 1101	projection	product family
				tolerances unless otherwise specified				DIN POWER 5159
ltr	ecn no	dr	date	angles	linear	.0±.1		title
D	LS06–0022	LGO	2006–02–21			.00±.1	mm	MALE CONNECTOR 2 ROW
E	LS06–0095	LGO	2006–06–26	0°±2°		.000±.1	scale 2	15 CONTACTS
F	LS07–0172	LGO	2007–06–18					
G	LS07–0288	LGO	2007–11–19	dr	L.GOISNARD	2005–12–13	Amphenol FCi	dwg no C01–5159–0017 sheet 1 of 1 size A3
H	F10–0214	APA	2010–10–01	engr	L.GOISNARD	2005–12–13		
J	F12–0053	APA	2012–05–07	chr	BASIL PETER	2025–03–31		type Product Customer Drawing
K	ELX–I–55191	BP	2025–03–31	appd	M JACOB	2025–03–31		
sheet index	revision	K	–					
	sheet	1						

© 2016 AFCI

PDS: Rev :K STATUS:Released Printed: Apr 03, 2025