DIMENSIONS

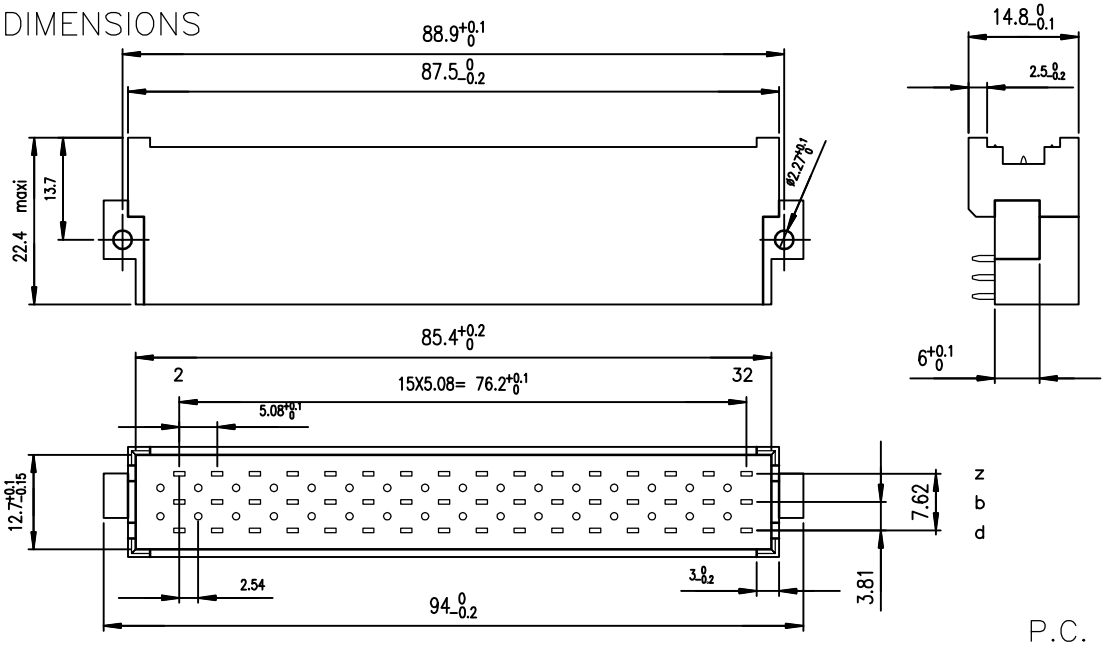

ELECTRICAL DATA

–Current at AMB.	5.5 A at 20° / 4 A at 70°
–Contact resistance	≤15mΩ according to DIN 41640 Teil 4 test 2a
–Insulation resistance	$\geq 10^6$ MΩ according to DIN 41640 teil 7 test 3a
–TEST VOLTAGE	according to DIN 41640 teil 21
contact/contact	1550 V
contact/ground	2500 V

MECHANICAL DATA

–Insertion force		≤75N
–Mechanical endurance	–class 1	500 matings unmatings according to DIN41640 teil 21
	–class 2	400 matings unmatings according to DIN41640 teil 21
–Material insulator		PBT MARKING LASER COMPATIBLE UL94V0
–Material contacts		Copper alloy
–Finishing contact surface		Gold over nickel Lead Free
–Finishing termination		Lead–free
–Schock		≤30mΩ according to DIN 41640 Teil 14 test 6c
–Vibration	–class 1	
	–class 2	10–500Hz/5g according to DIN 41640 Teil 15

ENVIRONMENTAL DATA

–Climatic category	According to DIN 41612
–Corrosion	According to DIN 41612

FMLB CTS IN POSITIONS b2;b32

P.C. CARD DRILLING

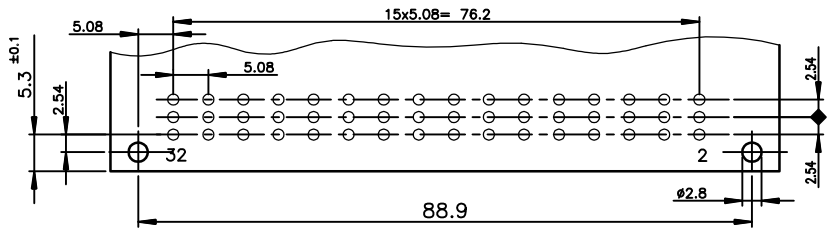

PART NUMBER	5159	– 009	– 4863	□	4	– 151LF
STYLE f						
NUMBER OF CONTACTS						
TERMINATION Angled spills						
PERFORMANCE CLASS DIN 41612 class 2 DIN 41612 class 1					5 9	
CONTACT TERMINATION Angled spills 2.54 X 5.08						
FOR LEAD–FREE VERSION						

NOTE RoHS INFORMATION

– The "LF" products meet European Union Directives and other country regulations as described in GS–22–008.
– The housing will whistand exposure to 260°C peak temperature for 3.5 seconds in a wave solder application with a 1.6mm minimum thick circuit board.
– For the right angled versions , like the current leaded versions, it's recommended to use high temperature adhesive or metallic device, to protect the nearlest plastic part in contact with of the solder wave, to avoid any visual plastic deterioration.

TERMINATION

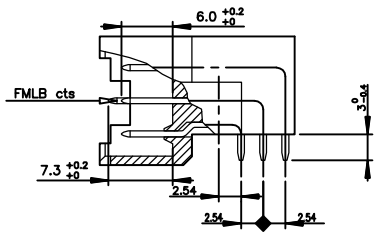

rev	ecn no	dr	date
A	–	SJO	2000/05/23
B	LS06–0089	LGO	2006/06/14
C	LS07–0288	LGO	2007/11/19
D	F10–0214	APA	2010/10/01
E	F12–0053	APA	2012/05/07
–	–	–	–
–	–	–	–

REV F – 2006–04–17

European Views

www.fciconnect.com

surface ISO 1302 | tolerance std ISO 406 ISO 1101 | projection | mm

TOLERANCES UNLESS OTHERWISE SPECIFIED

Dr	JOUBERT	23/05/00
Eng	GOISNARD	23/05/00
Chr	LEGARE	23/05/00
Appr	LEGARE	23/05/00

ANGULAR 0.XX° ±2° | LINEAR 0.X ±0.1, 0.XX ±0.1, 0.XXX ±0.1

size A3 | Scale 1.5:1

ECN F12–0053

Product family DIN POWER | Spec ref –

title: MALE CONNECTOR 3 ROW
48 CTS & 2 FMLB CONTACTS

dwg no C01–5159–0063 | Rev. E

catalog no – | CUSTOMER | sheet 1 of 1

Copyright FCI.