REVISIONS					
REV	ECO	DESCRIPTION	DATE	BY	APPR
A1	--	RELEASED DRAWING	Jun-15-18	White	TOMMY
A2	--	UPDATE NOTES	Oct-18-2018	Blink	Tommy

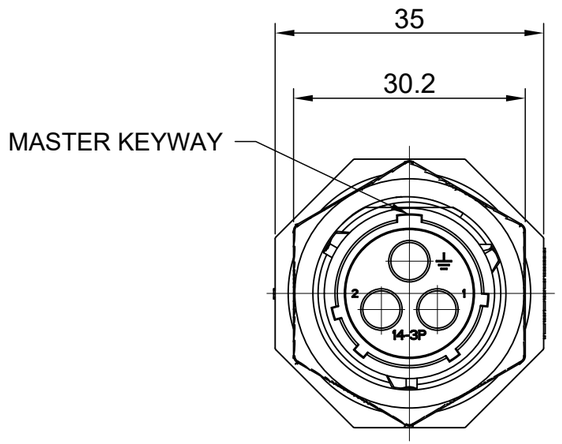

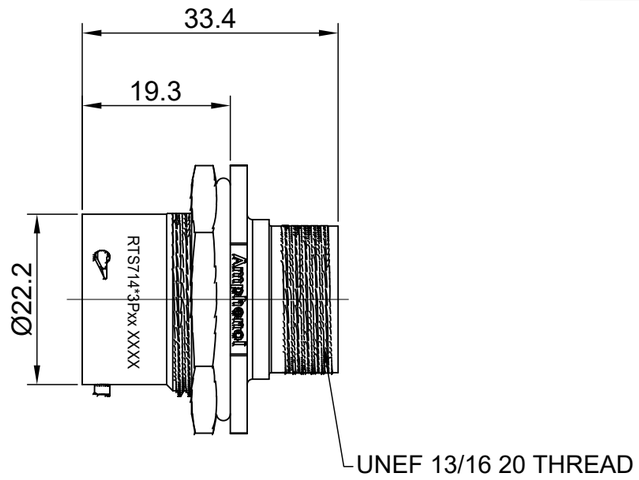

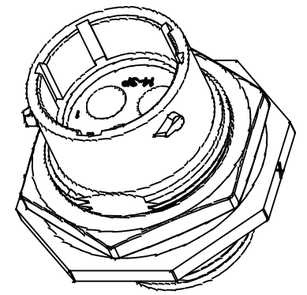

NOTES: (UNLESS OTHERWISE SPECIFIED)

1. MATERIAL:
   SHELL: THERMOPLASTIC, UL94 V-0.
   INSERT: THERMOPLASTIC, UL94 V-0.
   O-RING: NBR OR SILICONE RUBBER.
   SEAL GASKET: NBR OR SILICONE RUBBER.
   JAM NUT: ALUMINIUM ALLOY, BLACK ANODIZING.
2. SPECIFICATIONS:
   2.1 RATED CURRENT: 45A (MAX).
   2.2 RATED VOLTAGE: 600V(AC/DC).
   2.3 OPERATING TEMPERATURE: SEE TABLE.
   2.4 DIELECTRIC WITHSTANDING VOLTAGE: LESS THAN 2 MILLIAMPS CURRENT LEAKAGE@2500 VOLTS AC.
   2.5 INSULATION RESISTANCE: 5000 MEGOHMS MIN.
   2.6 IP CLASS: IP67 AND IP69K IN THE MATED CONDITION, WIRE SEALS FULLY POPULATED.
   2.7 MATING CYCLES DURABILITY: 500 CYCLES MIN.
   2.8 RoHS COMPLIANT.
3. SUITABLE CONTACTS : 8# CONTACT.

A2

CONTACT SIZE	CONTACT PN	WIRE RANGE	CORD GRIP
8#	MP10A23x-25	16 - 14AWG	BACK SHELL
	MP10A23x-63	12 - 10AWG	
	MP10A23x-10	8 AWG	
	MP10A23xL	12 - 10AWG	END CAP

IN THE CONTACT PN,"x" DENOTE DIFFERENT PLATING.

4. ALL DIMENSIONS ARE FOR REFERENCE USE ONLY.

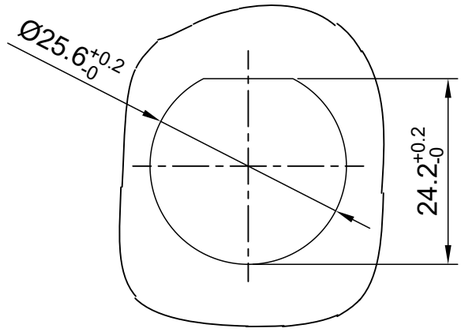

PANEL CUTOUT REFERENCE
THICKNESS:3.2MM (MAX)

KEY	PART NUMBER	
	-40°C ~ 105°C	-40°C ~ 125°C
N	RTS714N3P	RTS714N3P03

QUANTITY	PART NUMBER	DESCRIPTION	ITEM

MATERIALS LIST

UNLESS OTHERWISE SPECIFIED
1) All dimensions are in metric(mm).
2) Tolerances are as follows:
1 PL DEC ±0.30 | Fractions ±1/64
2 PL DEC ±0.15 | Angles ±1°
3 PL DEC ±0.08
3) Note reference = X

MATERIAL SPECIFICATIONS:

PROCESS SPECIFICATIONS:

NEXT ASS'Y:

SIGNATURES		DATE
DRAWN:	Blink	Oct-18-2018
CHECKED:	Tod	Oct-18-2018
ENGINEER:		
APPROVAL:	Tommy	Oct-18-2018
CUSTOMER:		

THIS DRAWING IS SUPPLIED FOR INFORMATION ONLY. DESIGN FEATURES, SPECIFICATIONS AND PERFORMANCE DATA SHOWN HEREON ARE THE PROPERTY OF THE AMPHENOL CORPORATION. NO RIGHTS OF REPRODUCTION ARE IMPLIED. ALL DIMENSIONS ARE SUBJECT TO NORMAL MANUFACTURING VARIATIONS.

Amphenol
Sine Systems - www.amphenol-sine.com
44724 Morley Drive
Clinton Township, MI 48036

ECO-MATE,RECEPTACLE, JAM NUT, SIZE 14,3POS,PIN

SIZE	TYPE	DWG NO:	REVISION
B	C-	RTS714*3Pxx	A2

SCALE: NONE SHEET 1 OF 1

TITLE: ECO-MATE,RECEPTACLE, JAM NUT,SIZE 14,3POS,PIN
DWG NO: RTS714*3Pxx
REV: A2
SH: 1
OF: 1

ecomate® RM, RSSM and Aquarius™ Series

Size 3.6mm Contact & Tooling Options (1403 Insert Arrangement)

Machined, Crimp Contacts						
Part Number		Contact Size (AWG)	Wire Range (mm²)	Male Contact For Use w End Cap	Female Contact For Use w End Cap	Plating
Male	Female					
MP10A23T-10	MS10A23T-10	8AWG	10.0 mm²	No	No	Tin
MP10A23S-10	MS10A23S-10	8AWG	10.0 mm²	No	No	Silver
MP10A23F-10	MS10A23F-10	8AWG	10.0 mm²	No	No	Gold Flash
MP10A23G5-10	MS10A23G5-10	8AWG	10.0 mm²	No	No	Gold 5µ"
MP10A23G10-10	MS10A23G10-10	8AWG	10.0 mm²	No	No	Gold 10µ"
MP10A23G15-10	MS10A23G15-10	8AWG	10.0 mm²	No	No	Gold 15µ"
MP10A23G30-10	MS10A23G30-10	8AWG	10.0 mm²	No	No	Gold 30µ"
MP10A23S-63	MS10A23S-63	10-12AWG	4.0-6.0 mm²	No	No	Silver
MP10A23F-63	MS10A23F-63	10-12AWG	4.0-6.0 mm²	No	No	Gold Flash
MP10A23S-63	MS10A23S-63W	10-12AWG	4.0-6.0 mm²	No	Yes	Silver
MP10A23F-63	MS10A23F-63W	10-12AWG	4.0-6.0 mm²	No	Yes	Gold Flash
MP10A23TL	MS10A23T	10-12AWG	3.0-6.0 mm²	Yes	Yes	Tin
MP10A23SL	MS10A23S	10-12AWG	3.0-6.0 mm²	Yes	Yes	Silver
MP10A23FL	MS10A23F	10-12AWG	3.0-6.0 mm²	Yes	Yes	Gold Flash
MP10A23G5L	MS10A23G5	10-12AWG	3.0-6.0 mm²	Yes	Yes	Gold 5µ"
MP10A23G10L	MS10A23G10	10-12AWG	3.0-6.0 mm²	Yes	Yes	Gold 10µ"
MP10A23G15L	MS10A23G15	10-12AWG	3.0-6.0 mm²	Yes	Yes	Gold 15µ"
MP10A23G30L	MS10A23G30	10-12AWG	3.0-6.0 mm²	Yes	Yes	Gold 30µ"
MP10A23S-25	MS10A23S-25	14-16AWG	1.5-2.5 mm²	No	No	Silver
MP10A23F-25	MS10A23F-25	14-16AWG	1.5-2.5 mm²	No	No	Gold Flash
MP10A23S-25	MS10A23S-25W	14-16AWG	1.5-2.5 mm²	No	Yes	Silver
MP10A23F-25	MS10A23F-25W	14-16AWG	1.5-2.5 mm²	No	Yes	Gold Flash

Machined, Tooling	
Part Number	Description
QXRT08	Contact Extraction Tool, # 8 (Ø 3.6mm) Contact
M300BT	Hand Crimper
WA27-300BT-EP	Pneumatic Crimper
TP968	Locator M3200BT and WA27-300BT-EP

Plating Options	
Symbol	Plating
T	Tin Plated (for Stamped & Formed Contacts)
S	Silver Plated 5Um (for Machined Contacts)
F	Gold Plated
G5	Gold Plated (Thickness 5µ")
G10	Gold Plated (Thickness 10µ")
G15	Gold Plated (Thickness 15µ")
G30	Gold Plated (Thickness 30µ")