Product Change Notification

TE Connectivity

Product Change Notification: P-23-025018 **PCN Date:** 28-AUG-23

TE would like to inform you of the following change(s) to the listed TE Connectivity Product. In case of any further questions about this change(s), please contact your TE Connectivity Sales Engineer. Affected part, drawing and/or specification numbers are listed on the attached sheet(s).

General Product Description:
Packing inner bag change

Description of Changes
Packing inner bag change **Other attachments:** 174058 packing inner bag change

Reason for Changes:	
Product improvement.Product improvement	
Estimated Dates:	
Last Order Date (Obsolete Parts Only):	**First Date To Ship** (Changed Parts Only):
	31-OCT-2023
Last Ship Date (Obsolete Parts Only):	**Last Date for Mixed Shipments:** (Changed Parts Only):
	30-NOV-2023

Part Number(s) being Modified:

Part Number	Part Discontinued per PCN	Customer Drawing	Customer Part Number	Alias Part Number(s)	Substitute Part Number	Substitute Alias Part Number(s)	Description Of Difference
174058-2	NO			"0-0174058-2"			

Part Number(s) being Modified:

Part Number	Part Discontinued per PCN	Customer Drawing	Customer Part Number	Alias Part Number(s)	Substitute Part Number	Substitute Alias Part Number(s)	Description Of Difference
174058-2	NO			"0-0174058-2"			

174058-2、4、5
Packaging improvement

Before

100pcs/bag

8bags/carton

2pcs paper pads

800pcs/carton

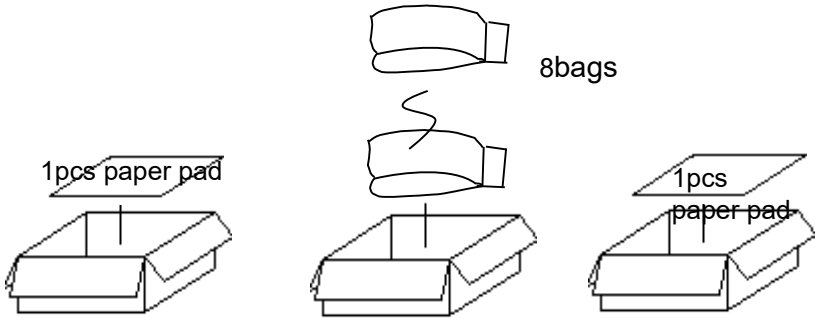

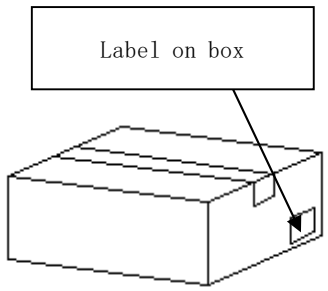

After

400pcs/bag

2bags/carton

2pcs paper pads

800pcs/carton

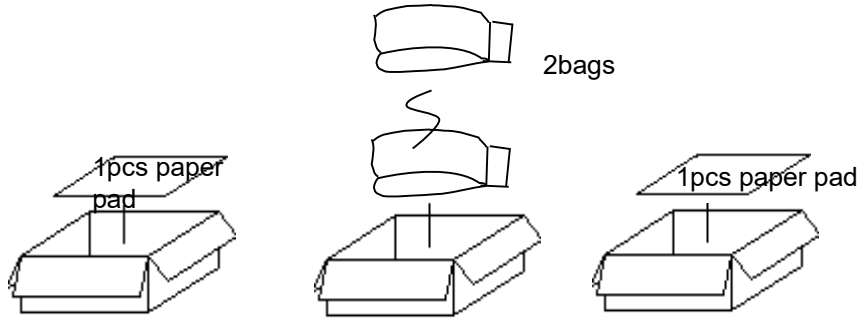

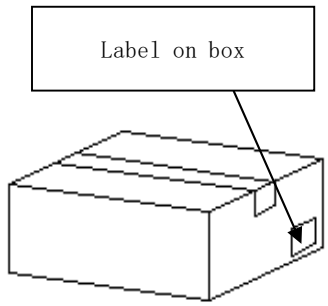

TE Connectivity Confidential & Proprietary. Do not reproduce or distribute.