Product Change Notification

TE Connectivity

Product Change Notification: P-23-024563 **PCN Date:** 18-MAY-23

TE would like to inform you of the following change(s) to the listed TE Connectivity Product. In case of any further questions about this change(s), please contact your TE Connectivity Sales Engineer. Affected part, drawing and/or specification numbers are listed on the attached sheet(s).

General Product Description:
High Power Resistors - Type ES series

Description of Changes
As part of strategic alignment and portfolio optimization, TE has decided to discontinue the TCPN's included in the list below. Last time buy and last time shipments will be supported until the provided dates below. The closest alternative series is TE EP Series (see attached) **Other attachments:** ES Data sheet EP Data sheet

Reason for Changes:	
Part status change.As part of strategic alignment and portfolio optimization, TE has decided to discontinue the TCPN's included in the list below. Last time buy and last time shipments will be supported until the provided dates below. The closest alternative series is TE EP Series (see attached)	
Estimated Dates:	
Last Order Date (Obsolete Parts Only):	**First Date To Ship** (Changed Parts Only):
18-AUG-2023	
Last Ship Date (Obsolete Parts Only):	**Last Date for Mixed Shipments:** (Changed Parts Only):
18-OCT-2023	No Mixed Shipments

Part Number(s) being Modified:

Part Number	Part Discontinued per PCN	Customer Drawing	Customer Part Number	Alias Part Number(s)	Substitute Part Number	Substitute Alias Part Number(s)	Description Of Difference
1-1624235-5	YES			"ES3WR05JTB"			
2-1624235-1	YES			"ES3WR05GTB"			

Part Number(s) being Modified:

Part Number	Part Discontinued per PCN	Customer Drawing	Customer Part Number	Alias Part Number(s)	Substitute Part Number	Substitute Alias Part Number(s)	Description Of Difference
1-1624235-5	YES			"ES3WR05JTB"			
2-1624235-1	YES			"ES3WR05GTB"			

Type ES Series

Key Features

- High Power to Size Ratio
- Entirely Welded Construction
- 0.5 Watt to 10 Watt Sizes
- Insulation Resistance >1000M
- Completely Flameproof
- Temperature Coefficient 300 ppm
- All Product Bandoliered

PRODUCT PLANNED FOR EOL

LTB 18/08/2023

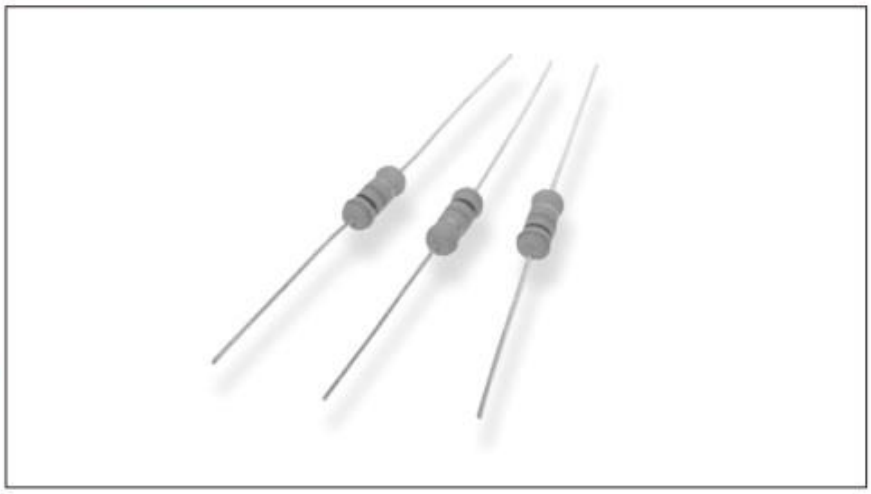

The ES is a new wirewound resistor from TE Connectivity manufactured to stringent quality control requirements and is an economy sister to the well known TE Connectivity ER Series. Whilst very slightly larger than the ER and manufactured to a marginally different specification, the ES is suited to volume requirements in power supplies, process control instruments, communication equipment, and other industrial positions. In addition to the ES we offer the practability of a wirewound resistor down to 9.0mm. x 3.00 mm., body size.

Characteristics - Electrical

Resistance Values:	R10 - 3K3 (Other values by agreement/see wattage table below)
Selection Tolerance:	± 5 % (Other tolerances by agreement)
Rated Dissipation @ 70°C:	See Table Below
Dielectric Strength:	500V AC
Insulation Resistance:	1000 M
Short Term Overload Power:	5 times overload 5 seconds
Terminal Strength:	5lb pull Test
Solderability:	Meets MIL - STD - 202
Maximum Operating Temperature:	200°C
Temperature Coefficient of Resistance:	± 300ppm°C

Dimensions

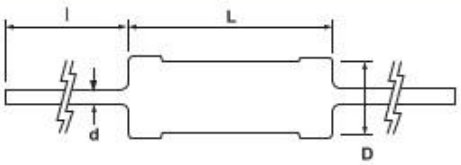

Type ES @ 70°C	Dimensions				Resistance Range	Dielectric Withstand Voltage
	D±1.0	L±1.5	l±3.0	d±0.05		
1/2W	3.0	9.0	30.0	0.65	R05-68R	350V
1W	4.0	9.0	30.0	0.65	R05-100R	500V
2W	5.0	11.0	30.0	0.80	R05-150R	500V
3W	5.5	13.0	38.0	0.80	R05-200R	500V
3WY	6.0	17.0	38.0	0.80	201R-470R	500V
5W	6.5	20.0	38.0	0.80	R10-390R	500V
6W	8.5	25.0	38.0	0.80	R10-1K0	500V
7W	8.5	32.0	38.0	0.80	R10-1K5	500V
8W	8.5	41.0	38.0	0.80	R10-2K2	800V
10W	8.5	53.0	33.0	0.80	R10-3K3	1000V

© 2023 TE Connectivity. All Rights Reserved.
TE Connectivity, TE connectivity (logo) and Every Connection Counts are trademarks owned or licensed by TE Connectivity. All other logos, products and/or company names referred to herein might be trademarks of their respective owners.

Resistance Value Marking

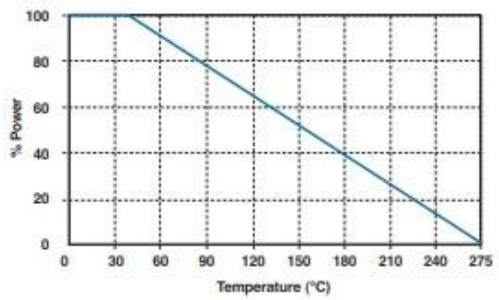

Surface Temperature Vs Power

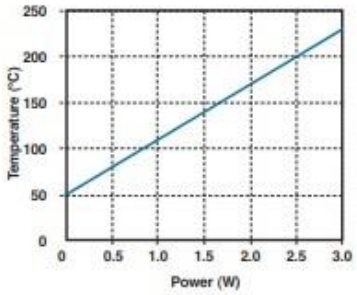

How to Order

ES2W	R10	J
Common Part	Resistance Value	Tolerance
ES05W - 1/2W ES1W - 1W ES2W - 2W ES3W - 3W ES3WY - 3W ES5W - 5W ES6W - 6W ES7W - 7W ES8W - 8W ES10W - 10W	0.1 ohm (100 milliohms) R10 1 ohm (1000 milliohms) 1R0 1K ohm (1000 ohms) 1K0	J - ±5%

While TE has made every reasonable effort to ensure the accuracy of the information in this brochure, TE does not guarantee that it is error-free, nor does TE make any other representation, warranty or guarantee that the information is accurate, correct, reliable or current. TE reserves the right to make any adjustments to the information contained herein at any time without notice. TE expressly disclaims all implied warranties regarding the information contained herein, including, but not limited to, any implied warranties of merchantability or fitness for a particular purpose. The dimensions in this data sheet are for reference purposes only and are subject to change without notice. Specifications are subject to change without notice. Consult TE for the latest dimensions and design specifications.

© 2023 TE Connectivity. All Rights Reserved.
TE Connectivity, TE connectivity (logo) and Every Connection Counts are trademarks owned or licensed by TE Connectivity. All other logos, products and/or company names referred to herein might be trademarks of their respective owners.

Type EP Series

Key Features

Power up to 10W in Small Size

16 Size/Power Options

Specially Designed and Tested for Surge Immunity

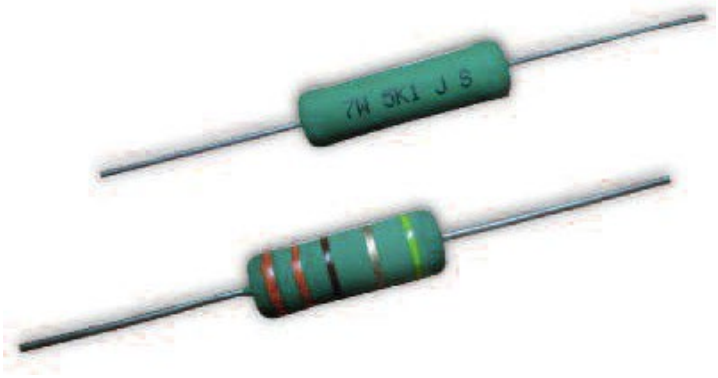

TE Connectivity is pleased to offer this wire wound axial leaded resistor. Robustly manufactured with high quality materials this resistor offers flame proof coating, and is designed and tested to withstand power surges of up to 12KV.

Characteristics – Electrical

	Type	Rated Power at 70° C	Max. Working Voltage	Max. Overload Voltage	Dielectric Withstanding Voltage	Resistance Range	Operating Temp. Range
Normal size	EP05W	1/2W (0.50W)	500 V	1,000 V	350 V	10Ω – 560Ω	-55°C – +155°C
	EP1W	1W	500 V	1,000 V	500 V	10Ω– 1KΩ	
	EP2W	2W	500 V	1,000 V	500 V	10Ω – 2KΩ	
	EP3W	3W	500 V	1,000 V	500 V	10Ω – 3KΩ	
	EP5W	5W	500 V	1,000 V	500 V	10Ω – 5KΩ	
	EP7W	7W	500 V	1,000 V	500 V	10Ω – 6KΩ	
	EP8W	8W	500 V	1,000 V	500 V	10Ω – 10KΩ	
	EP9W	9W	500 V	1,000 V	500 V	10Ω – 15KΩ	
Small size	EP1WS	1W	500 V	1,000 V	500 V	10Ω – 560Ω	-55°C – +155°C
	EP2WS	2W	500 V	1,000 V	500 V	10Ω – 1KΩ	
	EP3WS	3W	500 V	1,000 V	500 V	10Ω – 2KΩ	
	EP5WS	5W	500 V	1,000 V	500 V	10Ω – 3KΩ	
	EP7WS	7W	500 V	1,000 V	500 V	10Ω – 5KΩ	
	EP8WS	8W	500 V	1,000 V	500 V	10Ω – 6KΩ	
	EP9WS	9W	500 V	1,000 V	500 V	10Ω – 10KΩ	
	EP10WS	10W	500 V	1,000 V	500 V	10Ω – 15KΩ	

Derating Curve

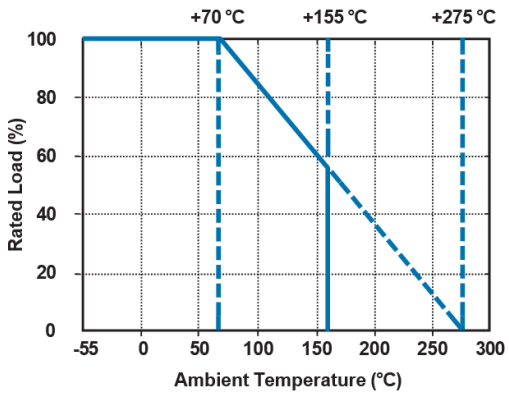

For resistors operated in ambient temperatures above 70°C, power rating must be derated in accordance with this curve.

Dimensions in millimetres unless otherwise specified

Dimensions Shown for reference purposes only. Specifications subject to change

For Email, phone or live chat, go to: www.te.com/help

Surge Rating

Type	Low Resistance Range	Maximum Surge Voltage	Medium Resistance Range	Maximum Surge Voltage	High Resistance Range	Maximum Surge Voltage
EP05W	10Ω – 40Ω	3KV	43Ω – 240Ω	4kV	270Ω – 560Ω	4kV
EP1W	10Ω – 50Ω	4KV	51Ω – 240 Ω	5kV	270Ω – 1kΩ	5kV
EP2W	10Ω – 100Ω	5KV	110Ω – 240Ω	6kV	270Ω – 2kΩ	6kV
EP3W	10Ω – 100Ω	7KV	110Ω – 680Ω	8kV	750Ω – 3kΩ	8kV
EP5W	10Ω – 160Ω	8KV	180Ω – 680Ω	9kV	750Ω – 5kΩ	9kV
EP7W	10Ω – 160Ω	9KV	180Ω – 680Ω	10kV	750Ω – 6kΩ	10kV
EP8W	10Ω – 160Ω	10KV	180Ω – 680Ω	11kV	750Ω – 10kΩ	11kV
EP9W	10Ω – 160Ω	10KV	180Ω – 680Ω	11kV	750Ω – 15kΩ	12kV
Small Size						
EP1WS	10Ω – 40Ω	3KV	43Ω – 240Ω	4kV	270Ω – 560Ω	4kV
EP2WS	10Ω – 50Ω	4KV	51Ω – 240 Ω	5kV	270Ω – 1kΩ	5kV
EP3WS	10Ω – 100Ω	5KV	110Ω – 240Ω	6kV	270Ω – 2kΩ	6kV
EP5WS	10Ω – 100Ω	7KV	110Ω – 680Ω	8kV	750Ω – 3kΩ	8kV
EP7WS	10Ω – 160Ω	8KV	180Ω – 680Ω	9kV	750Ω – 5kΩ	9kV
EP8WS	10Ω – 160Ω	9KV	180Ω – 680Ω	10kV	750Ω – 6kΩ	10kV
EP9WS	10Ω – 160Ω	10KV	180Ω – 680Ω	11kV	750Ω – 10kΩ	11kV
EP10WS	10Ω – 160Ω	10KV	180Ω – 680Ω	11kV	750Ω – 15kΩ	12kV

Surge Waveform (1.2 /50 µs)

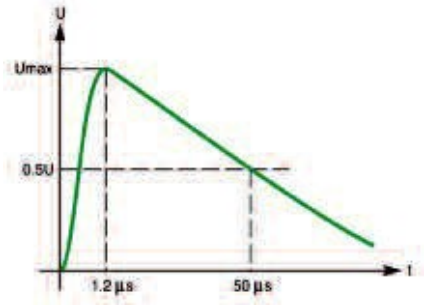

1.2 / 50 µs Voltage Capability

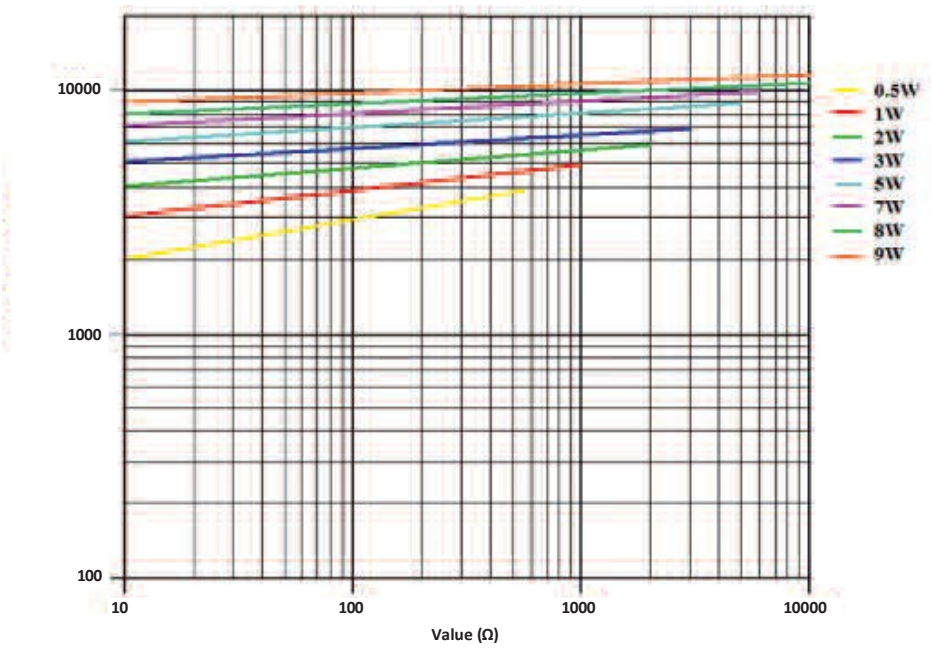

Construction

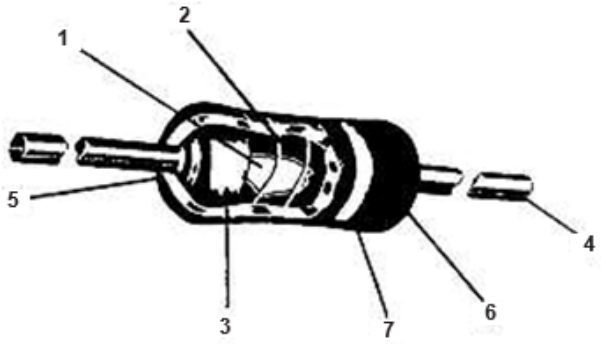

No.	Name	Material
1	Basic Body	Rod Type Ceramics
2	Resistance Wire	Ni-Cr Alloy, Cu-Ni Alloy
3	End Cap	Steel (Tin plated iron surface)
4	Lead Wire	Annealed copper wire coated with tin
5	Joint	By welding
6	Coating	Insulated & Non-Flame paint (colour: Light Green)
7	Colour Code	Non-resin

Dimensions and Resistance Range

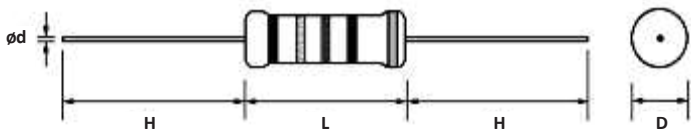

Type	Power Rating at 70 ℃	Dimensions (mm)			
		D ± 1	**L ± 1**	**d ± 0.05**	**H ± 3**
EP05W	1/2W (0.50W)	3.5	10.0	0.54	28
EP1W	1W	5.0	12.0	0.70	28
EP2W	2W	5.5	16.0	0.70	28
EP3W	3W	6.5	17.5	0.75	28
EP5W	5W	8.5	25.0	0.75	38
EP7W	7W	8.5	30.0	0.75	38
EP8W	8W	8.5	40.0	0.75	38
EP9W	9W	8.5	53.0	0.75	38
EP1WS	1W-S	3.5	10.0	0.54	28
EP2WS	2W-S	5.0	12.0	0.70	28
EP3WS	3W-S	5.5	16.0	0.70	28
EP5WS	5W-S	6.5	17.5	0.75	28
EP7WS	7W-S	8.5	25.0	0.75	38
EP8WS	8W-S	8.5	30.0	0.75	38
EP9WS	9W-S	8.5	40.0	0.75	38
EP10WS	10W-S	8.5	53.0	0.75	38

Performance Specification

Characteristics	Limits	Test Methods (JIS C 5201-1)
DC. resistance	Must be within the specified tolerance	The limit of error of measuring apparatus shall not exceed allowable range or 5% of resistance tolerance. (Sub-clause 4.5)
Temperature coefficient	<20Ω : ± 400 PPM/°C ≥20Ω : ± 300PPM/°C	Natural resistance change per temp. degree centigrade. $\frac{R2-R1}{R1(t2-t1)} \times 10^6$ (PPM/°C) R_1: Resistance value at room temperature (t_1) R_2: Resistance value at room temp. plus 100 °C (t_2) (Sub-clause 4.8)
Short time overload	Resistance change rate is ± (2% + 0.05Ω) Max. with no evidence of mechanical damage	Permanent resistance change after application of a potential of 2.5 times RCWV for 5 seconds. (Sub-clause 4.13)
Terminal Strength	No evidence of mechanical damage	**Direct load:** Resistance to a 2.5 kgs direct load for 10 secs. In the direction of the axis of the terminal leads **Twist test:** Terminal leads shall be bent through 90°at a point of about 6mm from the body of the resistor and shall be rotated through 360°about the original axis of the bent terminal in alternating direction for a total of3 rotations (Sub-clause 4.16)
Solderability	95% coverage Min.	The area covered with a new, smooth, clean, shiny and continuous surface free from concentrated pinholes. Test temp. of solder 245°C ± 3°C Dwell time in solder : 2 ~ 3 seconds (Sub-clause 4.17)
Soldering temp. reference	Electrical characteristics shall be satisfied. Without distinct deformation in appearance. (95% coverage Min.)	The leads immersed into solder bath to3.2 to 4.8 mm. from the body. Permanent resistance change shall be checked. Wave soldering conditions: (2 cycles Max.) Pre-heat : 100 ~ 120 °C, 30 ± 5 sec. Suggestion solder temp.: 235 ~ 255 °C, 10 sec. (Max.) Peak temp.: 260 °C Hand soldering condition: Hand soldering bit temp.: 380 ± 10 °C Dwell time in solder : 3 +1/-0 sec.
Resistance to soldering heat	Resistance change rate is ± (1% + 0.05Ω) Max. with no evidence of mechanical damage.	Permanent resistance change when leads immersed to 3.2 to 4.8 mm from the body in 350°C ± 10 °C solder for 3 ± 0.5 seconds. (Sub-clause 4.18)

Performance Specification (continued)

<table>
<tr><th>Characteristics</th><th>Limits</th><th colspan="3">Test Methods
(JIS C 5201-1)</th></tr>
<tr><td rowspan="7">Temperature cycling</td><td rowspan="7">Resistance change rate is ± (2% + 0.05Ω) Max. with no evidence of mechanical damage</td><td colspan="3">Resistance change after continuous 100 cycles for duty shown below:</td></tr>
<tr><td>Step</td><td>Temperature</td><td>Time</td></tr>
<tr><td>1</td><td>-55℃ ± 3℃</td><td>30 mins</td></tr>
<tr><td>2</td><td>Room temp.</td><td>10～15 mins</td></tr>
<tr><td>3</td><td>+155℃ ± 2℃</td><td>30mins</td></tr>
<tr><td>4</td><td>Room temp.</td><td>10～15 mins</td></tr>
<tr><td colspan="3">(Sub-clause 4.19)</td></tr>
<tr><td>Vibration</td><td>Resistance change rate is ± (1% + 0.05Ω) Max.</td><td colspan="3">55Hx, 3 planes 2hrs each
Total amplitude = 1.5mm
(Sub-clause 4.22)</td></tr>
<tr><td>Load life in humidity</td><td>Resistance change rate is ±(5% + 0.05Ω) Max. with no evidence of mechanical damage</td><td colspan="3">Resistance change after 1000 hrs (1.5 hrs “on”, 0.5 hr “off”) at RCWV in a humidity test chamber controlled at 40 ℃ ± 2 ℃ and 90 to 95 % relative humidity

(Sub-clause 4.24.2.1)</td></tr>
<tr><td>Load life</td><td>Resistance change rate is ±(5% + 0.05Ω) Max. with no evidence of mechanical damage</td><td colspan="3">Permanent resistance change after 1000 hrs operating at RCWV with duty cycle of (1.5 hours "on", 0.5 hour "off") at 70℃ ± 2℃ ambient

(Sub-clause 4.25.1)</td></tr>
<tr><td>Resistance to solvent</td><td>No deterioration of protective coatings and markings</td><td colspan="3">Specimens shall be immersed in a bath of Isopropyl alcohol completely for 3 minutes with ultrasonic
(Sub-clause 4.30)</td></tr>
<tr><td>Surge immunity test (Resistor stand alone-Not sync to phase angle and polarity)</td><td>Resistance change rate is ±(5% + 0.05Ω) Max.</td><td colspan="2">Refer to IEC61000-4-5
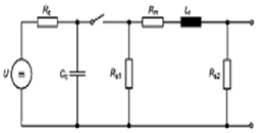
1.2µsec rising time and
50µsec discharge;
10 cycles every 1 minute</td><td>Max Surge Voltage

Refer to surge rating chart.</td></tr>
</table>

Painting Method

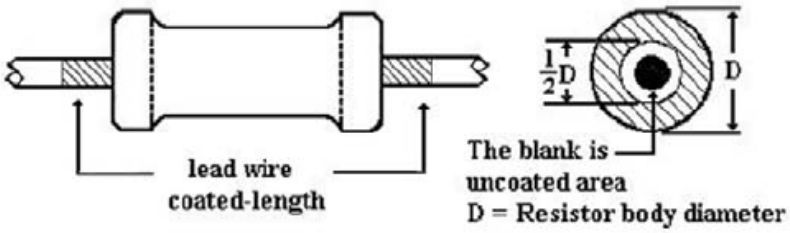

Welding point, terminal and lead wire, is permissible to be exposed without the outer coated cover. The extent should be within ½ of the angle.

Marking

For EP Normal Size 1/2W, 1W, 2W, 3W and EP Small Size 1WS, 2WS, 3WS, 5WS Resistors shall be marked with colour coding in accordance with JIS C 0802.

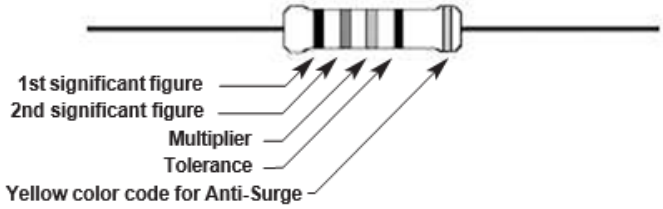

For EP Normal Size 5W, 7W, 8W 9W and EP Small Size 7WS, 8WS, 9WS, 10WS Resistors will be marked with:

1 . Power Rating,
2. Nominal Resistance
3. Resistance Tolerance Code.

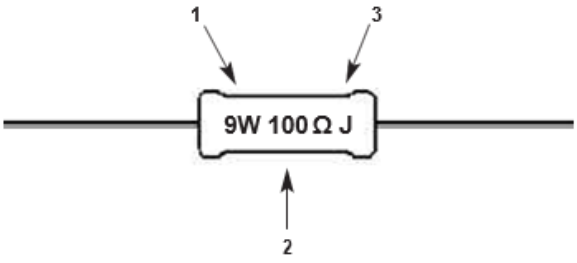

Label

Label shall be marked with the following items:

1. Type and style
2. Nominal resistance
3. Resistance tolerance
4. Quantity
5. Lot number
6. PPM

Example:

TYCO Pn	2176082-7		
DESC	EP 3W (S)	± 5%	100R
QTY	1,000	Pcs.	PPM: 300
LOT	SAMPLE		
REF	RoHS 2011/65/EU		

Packaging

Tape dimensions (mm)

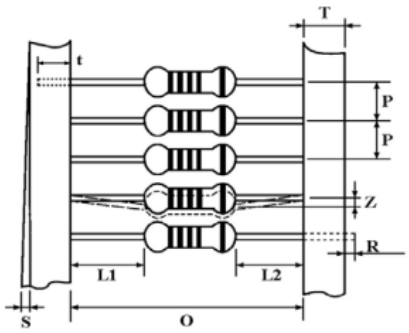

	Style	O ± 1	P	L1-L2 Max.	T ± 1	Z Max.	R	T ± 1	S Max.
EP05W	PT-52	52	5± 0.3	1	6	1	0	4	0.5
EP1W	PT-52	52	5± 0.3	1	6	1	0	4	0.5
EP2W	PT-64	64	10± 0.5	1	6	1	0	5	0.5
EP3W	PT-64	64	10± 0.5	1	6	1	0	6	0.5
Small Size									
EP1WS	PT-52	52	5± 0.3	1	6	1	0	4	0.5
EP2WS	PT-52	52	5± 0.3	1	6	1	0	4	0.5
EP3WS	PT-64	64	10± 0.5	1	6	1	0	5	0.5
EP5WS	PT-64	64	10± 0.5	1	6	1	0	6	0.5

Tape In Box Packaging (mm)

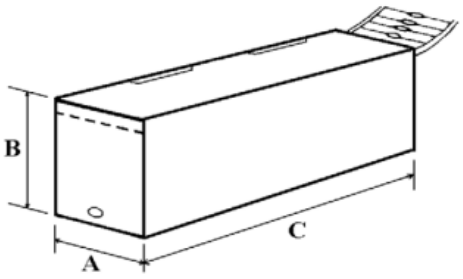

Bandoliers may also be contained in a cardboard box ("Ammopack")

	Style	C ± 5	A ± 5	B ± 5	Quantity Per Box (pcs.)
EP05W	PT-52	260	85	70	1000
EP1W	PT-52	262	86	80	1000
EP2W	PT-64	262	92	108	1000
EP3W	PT-64	256	92	80	500
Small Size					
EP1WS	PT-52	260	85	70	1000
EP2WS	PT-52	262	86	80	1000
EP3WS	PT-64	262	92	108	1000
EP5WS	PT-64	256	92	80	500

Tape On Reel Packaging (mm)

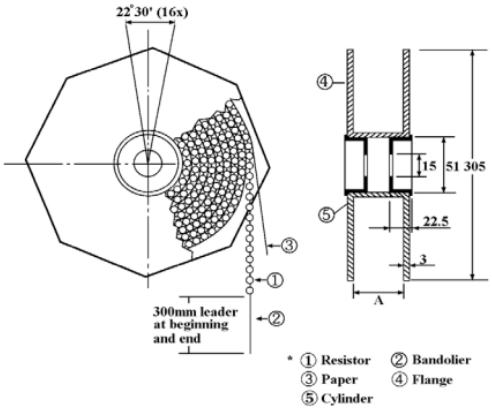

	Style	A (Across Flanges)	Quantity Per Reel
EP05W	PT-52	73 ± 2	2500
EP1W	PT-52	73 ± 2	2500
EP2W	PT-64	81 ± 5	1000
EP3W	PT-64	81 ± 5	500
Small Size			
EP1WS	PT-52	73 ± 2	2500
EP2WS	PT-52	73 ± 2	2500
EP3WS	PT-64	81 ± 5	1000
EP5WS	PT-64	81 ± 5	500

Bulk In Box (in plastic bag) (mm)

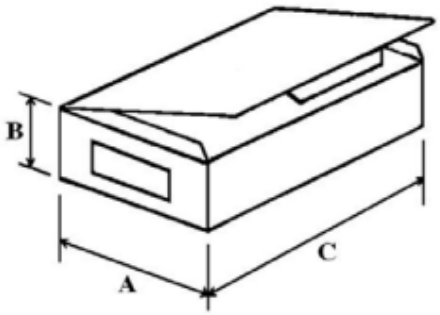

	C ± 5	A ± 5	B ± 5	Quantity Per Bag/Box (pcs.)
EP05W	155	95	53	100 / 1000
EP1W	155	95	53	100 / 500
EP2W	155	95	53	100 / 500
EP3W	155	95	53	100 / 400
Small Size				
EP1WS	155	95	53	100 / 1000
EP2WS	155	95	53	100 / 500
EP3WS	155	95	53	100 / 500
EP5WS	155	95	53	100 / 400

Bulk In Plastic Case Packaging (mm)

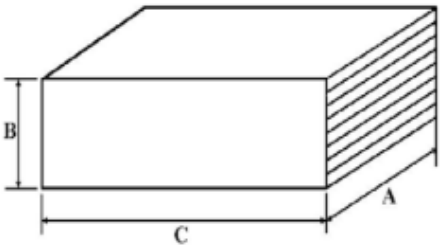

	C ± 5	A ± 5	B ± 5	Quantity Per Case/Box (pcs.)
EP5W	36	20	8	100 / 1000
Small Size				
EP7WS	36	20	8	100 / 1000

Dimensions in millimetres unless otherwise specified

Dimensions Shown for reference purposes only. Specifications subject to change

For Email, phone or live chat, go to: www.te.com/help

Bulk In Inner Box Packaging (in plastic bag) (mm)

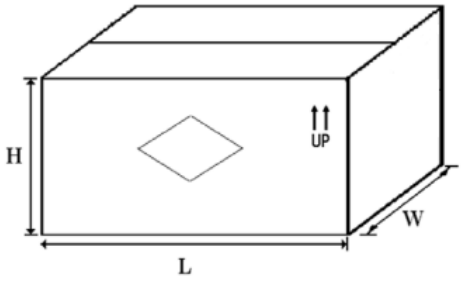

Carton Box

	Quantity / Bag (pcs.)	Quantity Inner Box (pcs.)	Quantity Carton (pcs.)	Carton Box Size L x W x H (± 5)
EP7W	10	250	1000	520 x 220 x 250
EP8W	10	250	1000	520 x 220 x 250
EP9W	10	250	1000	520 x 220 x 250
Small Size				
EP8WS	10	250	1000	520 x 220 x 250
EP9WS	10	250	1000	520 x 220 x 250
EP10WS	10	250	1000	520 x 220 x 250

How To Order

EP	3W	200R	J	
Common Part	**Power Rating**	**Nominal Resistance**	**Resistance Tolerance**	**Packaging**
EP	05W = 1/2W 1W = 1W 1WS = 1WS As per Electrical Characteristics chart	10 Ω – 10R 1K Ω – 1K0 (1000 Ω)	F = ±1 G = ±2 J = ±5 K = ±10	- Tape/Box TR - Tape/Reel BB - Bulk/Box

Dimensions in millimetres unless otherwise specified

Dimensions Shown for reference purposes only. Specifications subject to change

For Email, phone or live chat, go to: www.te.com/help