Amphenol Taiwan Corporation

Product Change Notification

Part Numbers Concerned :	G846AXX1X0XT1HR	**Originator:**	Roy Lin
Product Description:	G846A SERIES, WTB CONN 1.0 PITCH, DUAL ROWS, R/A, SMT TYPE	**Issue Date:**	11/17/2023
		PCN NO:	1210-23001692
Distribution:			

Product Change Notice

1. Add plating option.

Background:

Before

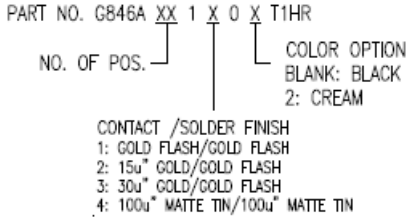

After

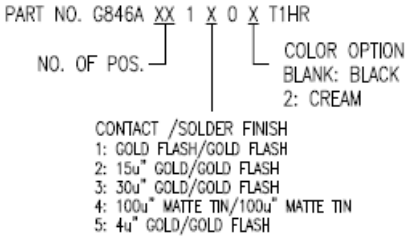

Product Part Number Affected:

G846A10110T1HR;G846A101202T1HR;G846A10130T1HR;
G846A10140T1HR;G846A141202T1HR;G846A16110T1HR;
G846A161202T1HR;G846A16120T1HR;G846A18120T1HR;
G846A20110T1HR;G846A20120T1HR;G846A30110T1HR;
G846A30120T1HR;G846A30130T1HR;G846A40110T1HR;
G846A40120T1HR;G846A40130T1HR;G846A40140T1HR;
G846A50110T1HR;G846A50120T1HR;

Implementation date:

11/17/2023

Recommended Action:

Sales representative to inform customers for drawing updated.

This document is the property of Amphenol Corporation and is delivered on the express condition that is not to be disclosed, reproduced or used, in whole or in part, for manufacture or sale by anyone other than Amphenol Corporation without its prior consent, and that no right is granted to disclose or to use any information in this document.

The marking on this product doesn't contain environmental hazardous materials per directive 2011/65/EU & 2015/863/EU for RoHS compliant and per IEC 61249-2-21 for Halogen-Free compliant.

REVISIONS				
SYM	ECN No.	DESCRIPTION	DATE	BY
B	NE-16133	ADDED DIMENSION & RIB NOTE & 30μ" GOLD	2016-07-04	Roger Tsai
C	NE-17226	ADDED 8 PIN & MATTE TIN IN OPTION	2017-08-25	Roger Tsai
D	NE-19113	ADDED NOTES NO.6, ADDED COLOR OPTION, REMOVED LOGO MARK	2019-06-25	Roger Tsai
E	NE-20140	ADDED 6 PIN OPTION	2020-03-20	Roger Tsai
F	NE-22175	ADDED 24 PIN OPTION	2022-09-07	Roy Lin
A1	NE-23321	ADDED PLATING OPTION	2023-11-17	Roy Lin

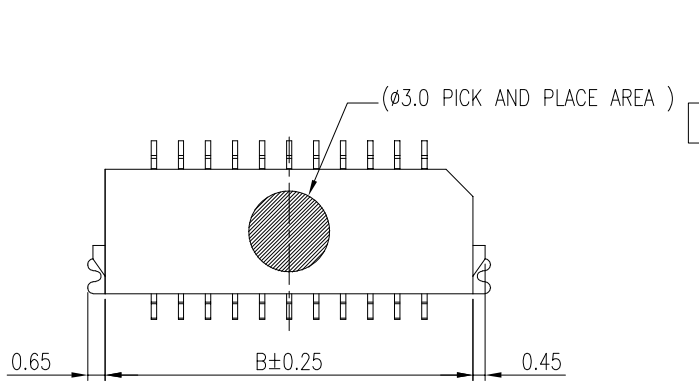

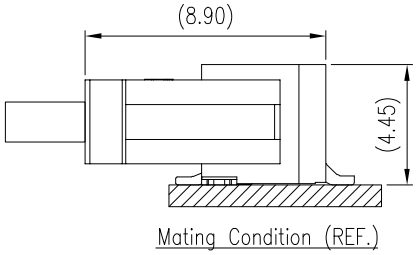

Mating Condition (REF.)

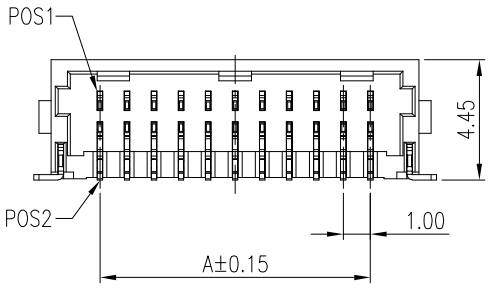

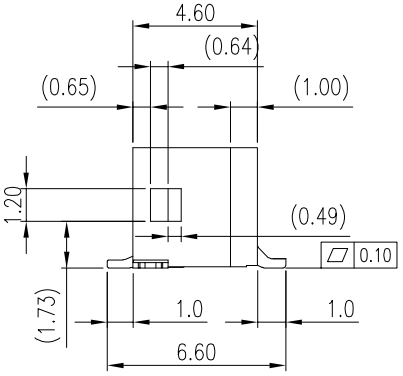

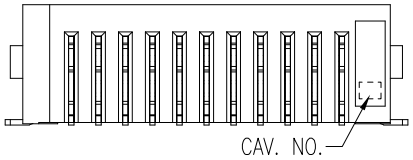

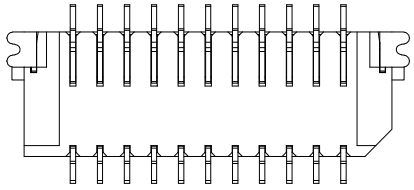

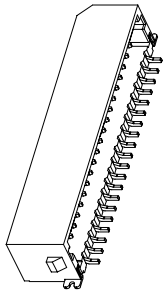

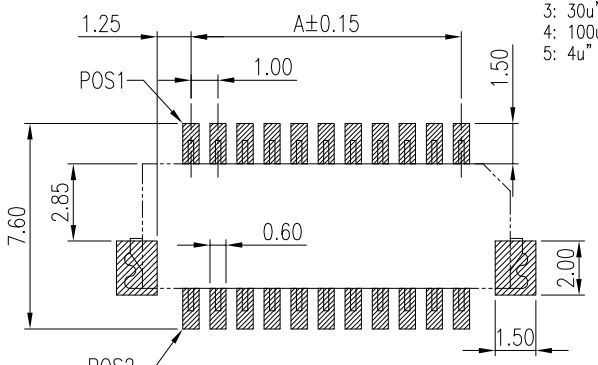

RECOMMENDED PCB LAYOUT

ALL TOLERNCE ARE ±0.05

NOTES:

1. MATERIAL:
   HOUSING: NYLON 9T, UL 94V-0, COLOR: OPTION.
   CONTACT: PHOSPHOR BRONZE
   FITTING NAIL: PHOSPHOR BRONZE
2. FINISH:
   CONTACT:
   CONTACT AREA: SELECTIVE PLATING;
   SOLDERING AREA: SELECTIVE PLATING;
   UNDER PLATING: NICKEL PLATING 50 μ" THICKNESS MIN. OVERALL.
   FITTING NAIL: MATTE TIN PLATING 100 μ" THICKNESS MIN.;
   UNDER PLATING: NICKEL PLATING 50 μ" THICKNESS MIN. OVERALL.
3. PRODUCT SPECIFICATION REFER TO : PS-7533.
4. THIS PRODUCT DOESN'T CONTAIN ENVIRONMENTAL HAZARDOUS PER DIRECTIVE 2011/65/EU & 2015/863/EU FOR RoHS COMPLIANT. AND PER IEC 61249-2-21 FOR HALOGEN-FREE COMPLIANT.
5. COPLANARITY OF SOLDER PINS 0.10MM MAX.

PART NO. G846A XX 1 X 0 X T1HR

- XX: NO. OF POS.
- X (1): CONTACT /SOLDER FINISH
  1: GOLD FLASH/GOLD FLASH
  2: 15u" GOLD/GOLD FLASH
  3: 30u" GOLD/GOLD FLASH
  4: 100u" MATTE TIN/100u" MATTE TIN
  5: 4u" GOLD/GOLD FLASH
- X (2): COLOR OPTION
  BLANK: BLACK
  2: CREAM

PIN	A	B
2X03	2.00	5.60
2X04	3.00	6.60
2X05	4.00	7.60
2X06	5.00	8.60
2X07	6.00	9.60
2X08	7.00	10.60
2X09	8.00	11.60
2X10	9.00	12.60
2X11	10.00	13.60
2X12	11.00	14.60
2X15	14.00	17.60
2X20	19.00	22.60
2X25	24.00	27.60

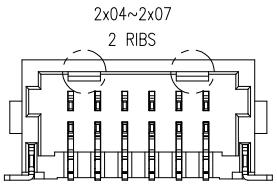

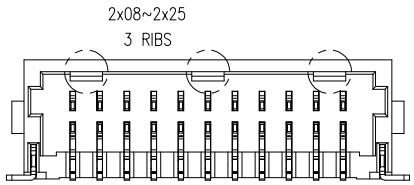

TOLERANCE	APPROVALS	DATE
X.	DRAWN Roy Lin	2023-11-17
X.X ±0.30	CHECKED Joseph Jiang	2023-11-17
X.XX ±0.20	APPROVED Roger Tsai	2023-11-17
X.XXX ±0.10	DWG TYPE CUST DWG	PROJECT CODE BHD
ANGULAR ±1°		
UNLESS OTHERWISE SPECIFIED		

TITLE: G846A SERIES, WTB CONN 1.00 PITCH, DUAL ROWS, R/A, SMT TYPE

Amphenol®
Amphenol Corporation
Amphenol Taiwan Corporation

UNIT	SIZE	PART No.	
mm	A3	G846AXX1X0XT1HR	
SCALE NA	SHEET 1 OF 3	DWG No. G846AXX1X0XT1HR	REV. A1

This document is the property of Amphenol Corporation and is delivered on the express condition that is not to be disclosed, reproduced or used, in whole or in part, for manufacture or sale by anyone other than Amphenol Corporation without its prior consent, and that no right is granted to disclose or to use any information in this document.

The marking on this product doesn't contain environmental hazardous materials per directive 2011/65/EU & 2015/863/EU for RoHS compliant and per IEC 61249-2-21 for Halogen-Free compliant.

REVISIONS				
SYM	ECN No.	DESCRIPTION	DATE	BY
B	NE-16133	ADDED DIMENSION & RIB NOTE & 30μ" GOLD	2016-07-04	Roger Tsai
C	NE-17226	ADDED 8 PIN & MATTE TIN IN OPTION	2017-08-25	Roger Tsai
D	NE-19113	ADDED NOTES NO.6, ADDED COLOR OPTION, REMOVED LOGO MARK	2019-06-25	Roger Tsai
E	NE-20140	ADDED 6 PIN OPTION	2020-03-20	Roger Tsai
F	NE-22175	ADDED 24 PIN OPTION	2022-09-07	Roy Lin
A1	NE-23321	ADDED PLATING OPTION	2023-11-17	Roy Lin

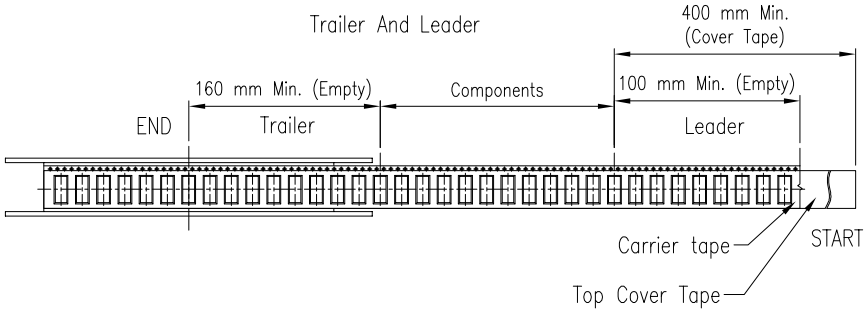

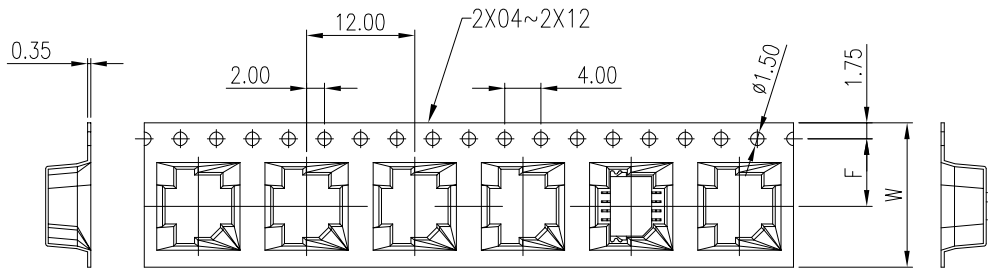

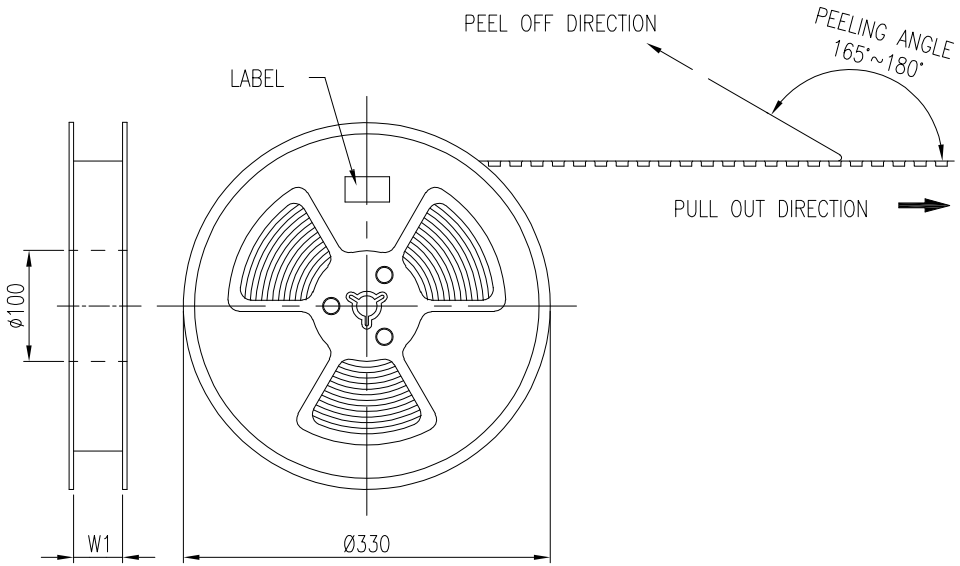

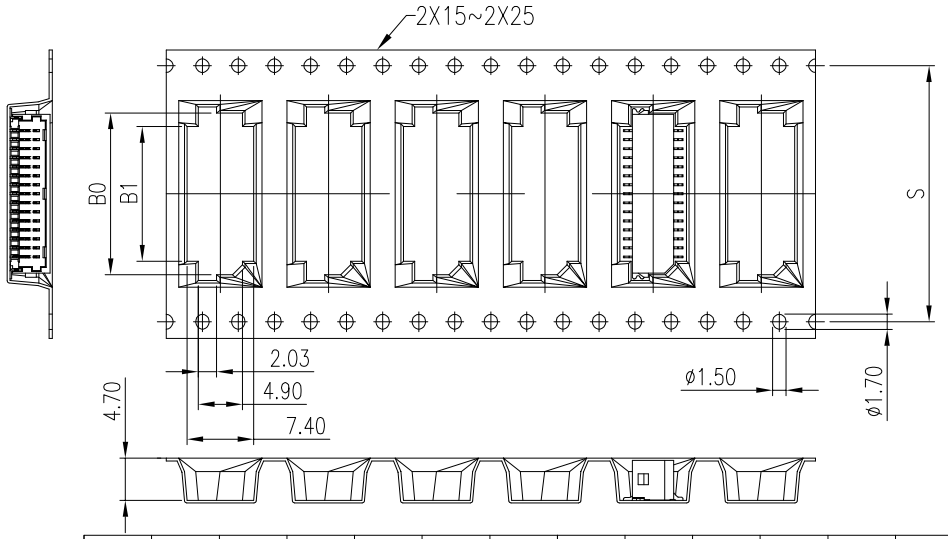

PIN	B0	B1	F	S	W	W1	PIN	B0	B1	F	S	W	W1
2X03	5.94	2.94	7.50	--	16.00	16.50	2X10	12.94	9.94	11.50	--	24.00	24.50
2X04	6.94	3.94	7.50	--	16.00	16.50	2X11	13.94	10.94	11.50	--	24.00	24.50
2X05	7.94	4.94	11.50	--	24.00	24.50	2X12	14.94	11.94	11.50	--	24.00	24.50
2X06	8.94	5.94	11.50	--	24.00	24.50	2X15	17.94	14.94	14.20	28.40	32.00	32.50
2X07	9.94	6.94	11.50	--	24.00	24.50	2X20	22.94	19.94	20.20	40.40	44.00	44.50
2X08	10.94	7.94	11.50	--	24.00	24.50	2X25	27.94	24.94	20.20	40.40	44.00	44.50
2X09	11.94	8.94	11.50	--	24.00	24.50							

NOTES:
1. 10 SPROCKET HOLE PITCH CUMULATIVE TOLERANCE ±0.20
2. CARRIER CAMBER IS WITHIN 1 mm IN 250 mm.
3. MATERIAL : BLACK CONDUCTIVE POLYSTYRENE ALLOY.(UP-5000)
4. ALL DIMENSIONS MEET EIA-481-C REQUIREMENTS.
5. THICKNESS : 0.35±0.05mm.
6. COMPONENT LOAD PER 13" REEL : 1000 PCS.

TOLERANCE	APPROVALS	DATE
X.	DRAWN Roy Lin	2023-11-17
X.X ±0.30	CHECKED Joseph Jiang	2023-11-17
X.XX ±0.20	APPROVED Roger Tsai	2023-11-17
X.XXX ±0.10		
ANGULAR ±1°		
UNLESS OTHERWISE SPECIFIED	DWG TYPE CUST DWG	PROJECT CODE BHD

TITLE: G846A SERIES, WTB CONN 1.00 PITCH, DUAL ROWS, R/A, SMT TYPE

Amphenol®
Amphenol Corporation
Amphenol Taiwan Corporation

UNIT	SIZE	PART No.	
mm	A3	G846AXX1X0XT1HR	
SCALE NA	SHEET 2 OF 3	DWG No. G846AXX1X0XT1HR	REV. A1

This document is the property of Amphenol Corporation and is delivered on the express condition that is not to be disclosed, reproduced or used, in whole or in part, for manufacture or sale by anyone other than Amphenol Corporation without its prior consent, and that no right is granted to disclose or to use any information in this document.

The marking on this product doesn't contain environmental hazardous materials per directive 2011/65/EU & 2015/863/EU for RoHS compliant and per IEC 61249-2-21 for Halogen-Free compliant.

REVISIONS				
SYM	ECN No.	DESCRIPTION	DATE	BY
B	NE-16133	ADDED DIMENSION & RIB NOTE & 30μ" GOLD	2016-07-04	Roger Tsai
C	NE-17226	ADDED 8 PIN & MATTE TIN IN OPTION	2017-08-25	Roger Tsai
D	NE-19113	ADDED NOTES NO.6, ADDED COLOR OPTION, REMOVED LOGO MARK	2019-06-25	Roger Tsai
E	NE-20140	ADDED 6 PIN OPTION	2020-03-20	Roger Tsai
F	NE-22175	ADDED 24 PIN OPTION	2022-09-07	Roy Lin
A1	NE-23321	ADDED PLATING OPTION	2023-11-17	Roy Lin

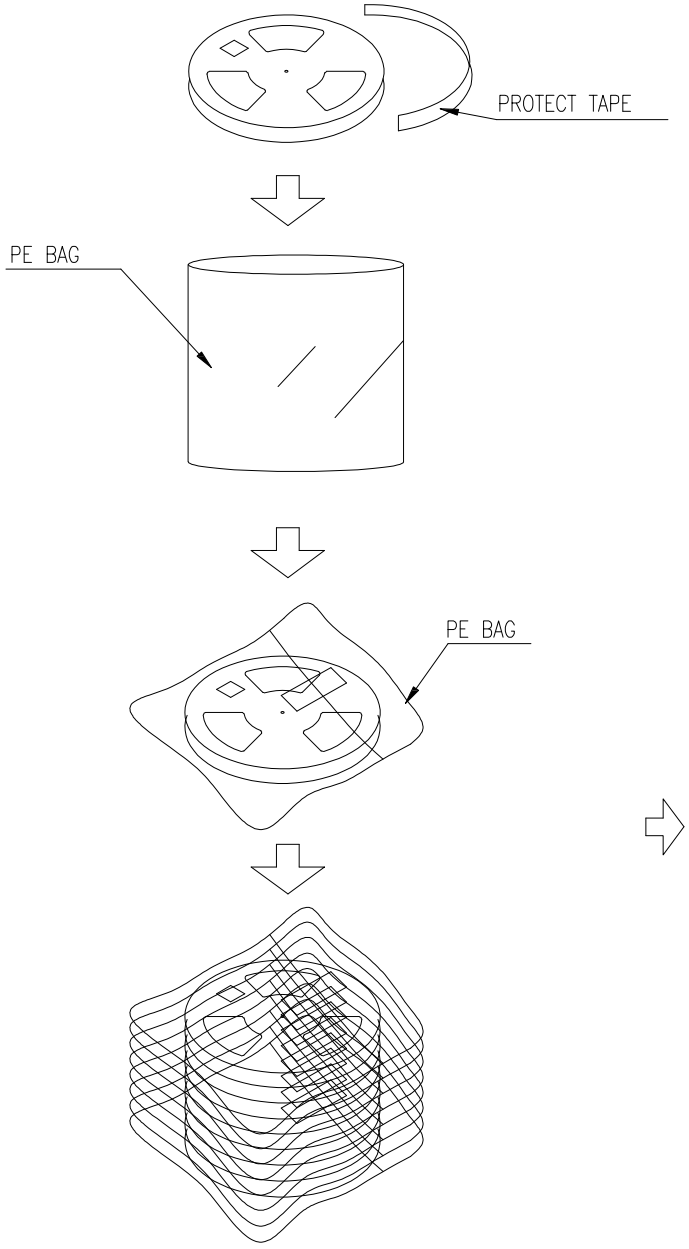

PIN, Q'TY/RE	REEL DIM.(mm)	PIN, RE/BC, PCS/BC	CARTON DIM.(mm)
2X03~2X25, 1,000 PCS/RE	∅ 330*(W+0.5)	2X03~2X04, 14 RE, 14,000 PCS/BC 2X05~2X11, 10 RE, 10,000 PCS/BC 2x12~2X15, 8 RE, 8,000 PCS/BC 2X20~2X25, 6 RE, 6,000 PCS/BC	350*350*340

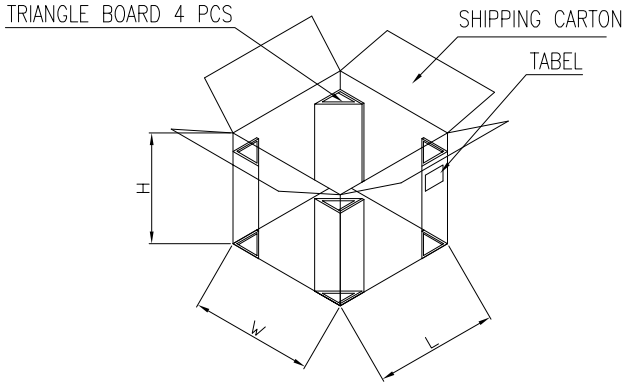

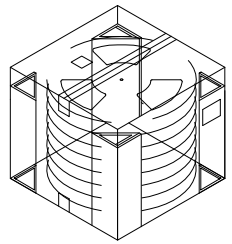

TOLERANCE	APPROVALS	DATE	TITLE
X.	DRAWN Roy Lin	2023-11-17	G846A SERIES, WTB CONN
X.X ±0.30	CHECKED Joseph Jiang	2023-11-17	1.00 PITCH, DUAL ROWS,
X.XX ±0.20	APPROVED Roger Tsai	2023-11-17	R/A, SMT TYPE
X.XXX ±0.10			
ANGULAR ±1°			
UNLESS OTHERWISE SPECIFIED	DWG TYPE CUST DWG	PROJECT CODE BHD	

Amphenol®
Amphenol Corporation
Amphenol Taiwan Corporation

UNIT	SIZE	PART No.	
mm	A3	G846AXX1X0XT1HR	
SCALE NA	SHEET 3 OF 3	DWG No. G846AXX1X0XT1HR	REV. A1