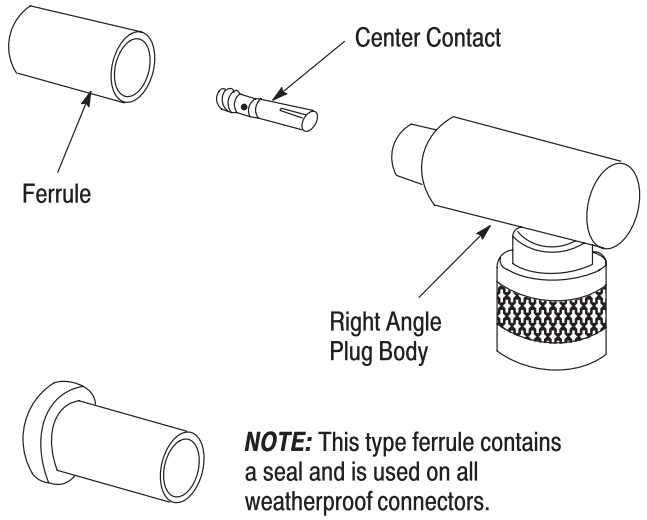

NOTE: This type ferrule contains a seal and is used on all weatherproof connectors.

Figure 1

1. INTRODUCTION

The connectors listed below are assembled and crimped as described in Section 2.

Refer to the table below for tool instruction sheet numbers.

The following instruction sheets contain information on additional N Series connectors:

Plugs	408–2028–01
Jacks	408–2028–02
Bulkhead Jacks	408–2028–03
Panel Jacks	408–2028–04

Reasons for reissue are provided in Section 3, REVISION SUMMARY.

2. TYPICAL ASSEMBLY PROCEDURE (Figure 2)

NOTE

Refer to the table on page 1 to determine the appropriate figure reference (Figure 3, 4, 5, or 6) for strip length dimensions.

1. Slide ferrule on cable, then strip cable to appropriate dimensions. DO NOT comb braid.

2. Crimp center contact onto center conductor using the appropriate tool instruction sheet referenced in table above.

3. Insert cable with crimped center contact into the connector (see Figure 2A) making certain that braid passes over support sleeve (see Figure 2B). Pull back lightly on cable to ensure contact is retained.

RG/U CABLE	SILVER PLATED PN		TARNISH RES. PN	CABLE STRIP DIM.	CRIMPING TOOL		DIES FOR TOOL 69365 OR 69710	
	Standard PN & Govt. Desig.† M39012/	Weather-Proof PN			PN	Instruction Sheet	PN	Instruction Sheet
8, 8A, 213	05-0002	225014-2	225389-2	225669-2	Fig. 4	220015-1	408-2331	–	–
9, 9A, 9B, 214	05-0003	225014-3	225389-4	225669-1	Fig. 3	220015-1	408-2331	–	–
165	–	–	225389-8	–	Fig. 4	220015-1	408-2331	–	–
225	–	–	225389-3	–	Fig. 3	220015-1	408-2331	–	–
MICRODOT 250-4172, -4208	–	–	225389-9	–	Fig. 4	220015-3	408-2331	–	–
58A, 58C	–	–	225394-4	–	Fig. 5	220045-2	408-2336	220062-1	408-2345
55A, 223	–	–	225394-1	–	Fig. 5	220045-2	408-2336	220062-1	408-2345
142, 142A, 142B	–	–	225394-2	–	Fig. 5	220045-2	408-2336	220062-1	408-2345
393	–	–	225389-6	–	Fig. 3	220015-1	408-2331	–	–
217	–	415314-1	–	–	Fig. 6	220065-1	408-2341	–	–

† Government designation applies only to silver plated standard parts.

©2009 Tyco Electronics Corporation, Harrisburg, PA
All International Rights Reserved
TE logo and Tyco Electronics are trademarks.
*Trademark. Other products, logos, and company names used are the property of their respective owners.

NOTE

The design of connectors for smaller cables (RG 55, 58, 141, and 142) allows the center contact to pass beyond the internal locking feature if it is inserted with too much force. Pull back on the cable to properly locate and retain the contact in the locking feature if this condition has occurred.

4. Slide ferrule over braid and crimp ferrule using the appropriate tool instruction sheet reference in table on page 1 (see Figure 2C). If using a weatherproof connector, make certain that the rubber seal is properly positioned, as shown in Figure 2D.

NOTE

When terminating part to cables less than 304.8 mm [12 in.] in length, care must be taken to prevent the cable dielectric from moving inside the cable jacket during crimping. Failure to prevent this movement could lead to DWV failures. When short cable lengths are required, it is recommended to use a 304.8 mm [12 in.] length of cable and trim cable to final length after crimping part onto cable.

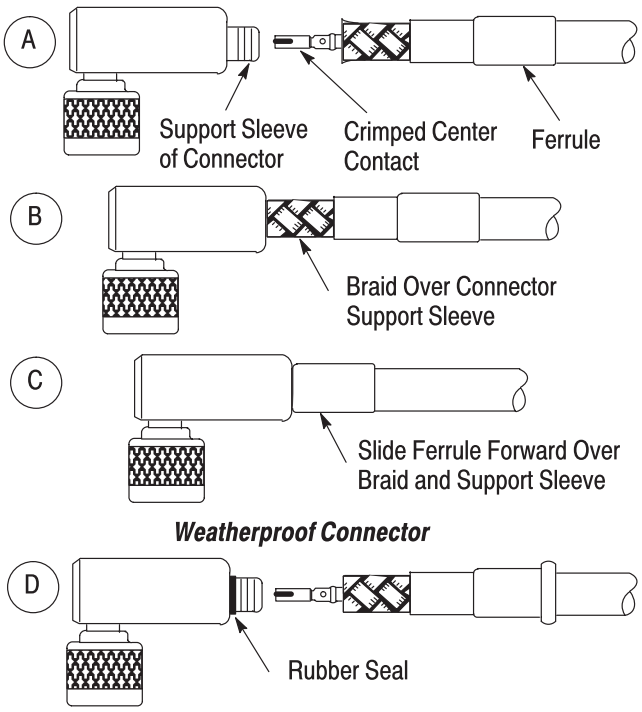

Figure 2

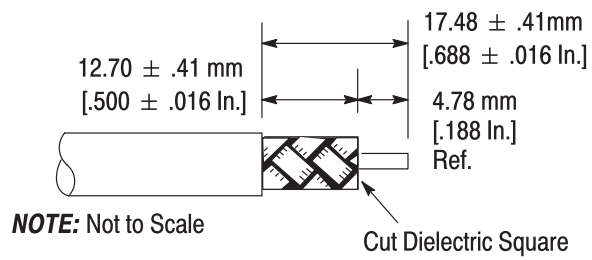

Figure 3

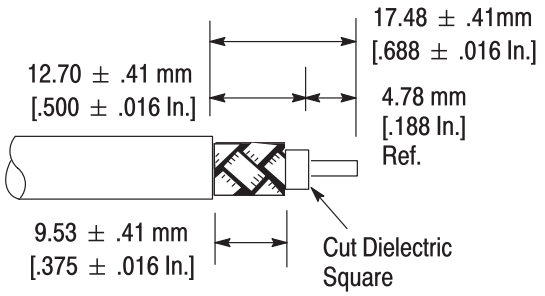

NOTE: Not to Scale

Figure 4

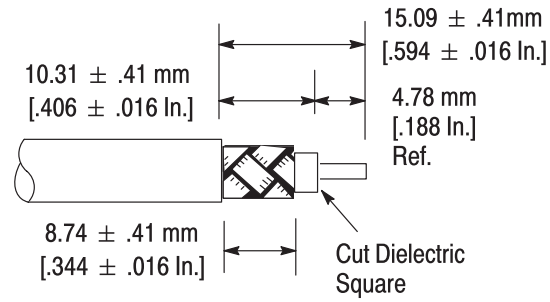

NOTE: Not to Scale

Figure 5

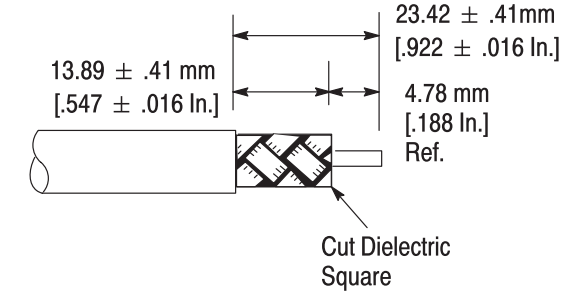

NOTE: Not to Scale

Figure 6

3. REVISION SUMMARY

- Updated document to corporate requirements
- Added NOTE to Paragraph 2.4