NOTE

All numerical values are in metric units [with U.S. customary units in brackets]. Dimensions are in millimeters [and inches]. Unless otherwise specified, dimensions have a tolerance of ±0.13 [±.005] and angles have a tolerance of ±2°. Figures and illustrations are for identification only and are not drawn to scale.

1. INTRODUCTION

This specification covers the requirements for application of SMPM Male Printed Circuit (PC) Board Surface and Edge Mount Connectors. These connectors are designed to be soldered to the surface of pc boards on a specific pattern for each connector type.

When corresponding with TE Connectivity Personnel, use the terminology provided in this specification to facilitate your inquiries for information. Basic terms and features of this product are provided in Figure 1.

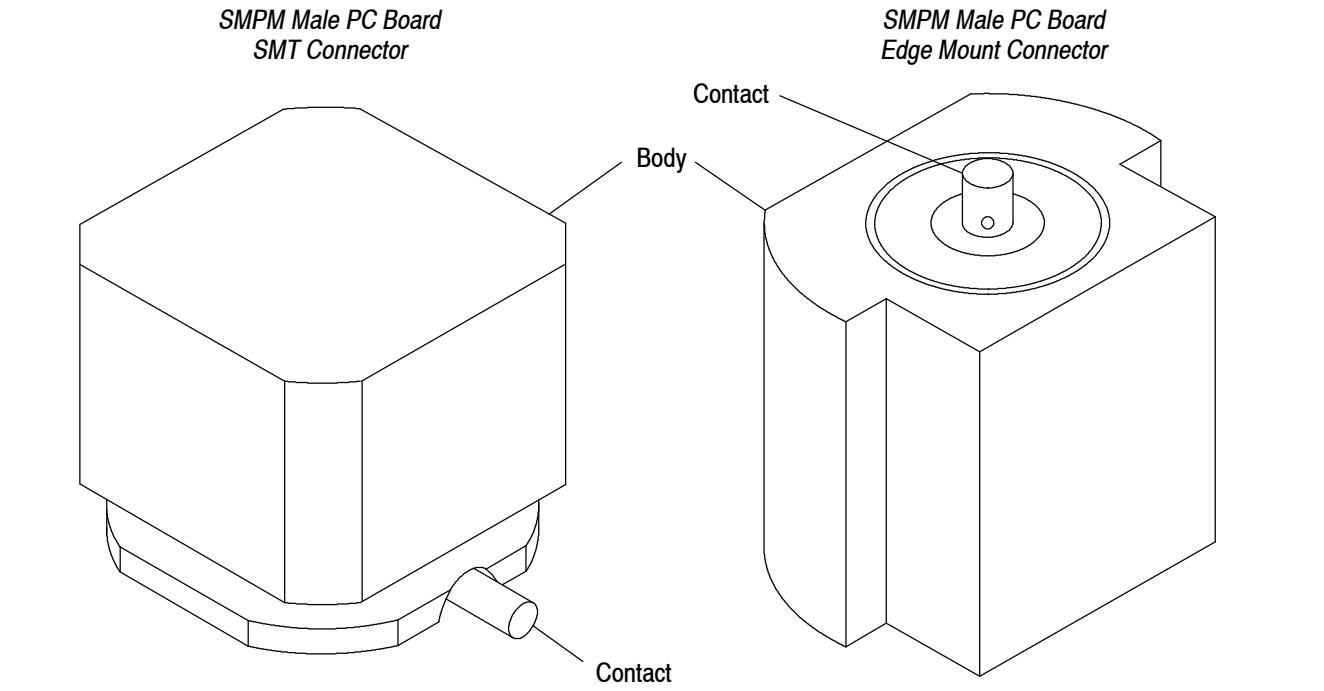

Figure 1

2. REFERENCE MATERIAL

2.1. Revision Summary

- Updated document to corporate requirements.

2.2. Customer Assistance

Reference Product Base Part Numbers 1757253 and 1757640, and Product Code K595 are representative of SMPM Male PC Board Surface and Edge Mount Connectors. Use of these numbers will identify the product line and expedite your inquiries through a service network established to help you obtain product and tooling information. Such information can be obtained through a local TE Representative or, after purchase, by calling Product Information at the number at the bottom of this page.

2.3. Drawings

Customer Drawings for product part numbers are available from the service network. If there is a conflict between the information contained in the Customer Drawings and this specification or with any other technical documentation supplied, call the Product Information number at the bottom of this page.

©2011 Tyco Electronics Corporation, a TE Connectivity Ltd. Company
All Rights Reserved
TE Connectivity, TE connectivity (logo), and TE (logo) are trademarks.
*Trademark. Other logos, product and/or Company names may be trademarks of their respective owners.

2.4. Manuals

Manual 402-40 is available from the service network. This manual provides information on various flux types and characteristics along with the commercial designation and flux removal procedures. A checklist is included in the manual as required for information on soldering problems.

2.5. Specifications

Design Objective 108-2242 provides expected product performance and test information for the SMPM Male PC Board Surface and Edge Mount Connectors.

3. REQUIREMENTS

3.1. Safety

Do not stack product shipping containers so high that the containers buckle or deform.

3.2. Limitations

The connectors are designed to operate in a temperature range of -55° to 125°C [-67° to 257°F]

3.3. Storage

A. Ultraviolet Light

Prolonged exposure to ultraviolet light may deteriorate the chemical composition used in the connector material.

B. Shelf Life

The connectors should remain in the shipping containers until ready for use to prevent deformation. The connectors should be used on a first in, first out basis to avoid storage contamination that could adversely affect performance.

C. Chemical Exposure

Do not store connectors near any chemical listed below as they may cause stress corrosion cracking in the contacts.

Alkalies	Ammonia	Citrates	Phosphates Citrates	Sulfur Compounds
Amines	Carbonates	Nitrites	Sulfur Nitrites	Tartrates

3.4. PC Board

A. Material and Thickness

Common pc board materials may be used such as glass epoxy (FR-4 or G-10), Aluminum-clad pc boards and flex circuits. The pc board thickness may vary to suit the end use thickness.

B. Tolerance

Maximum allowable bow of the pc board shall be 0.10 mm [.004 in.] over the length of the connector.



Since the connector housings may rest on top of the solder mask, an excessively high mask will allow too much space between the solder tine and pad for a good solder joint. A solder joint under these conditions would be weak, and would not provide long-term performance for the connector.

C. Pads

The pc board circuit pads must be solderable in accordance with Test Specification 109-11 (Test Method A, non-activated rosin flux).

D. Layout

The pc board layout must be designed using the dimensions provided on the customer drawing for the specific connector. The recommended pc board layout is shown in Figure 2.

Surface Mount PC Board Layout

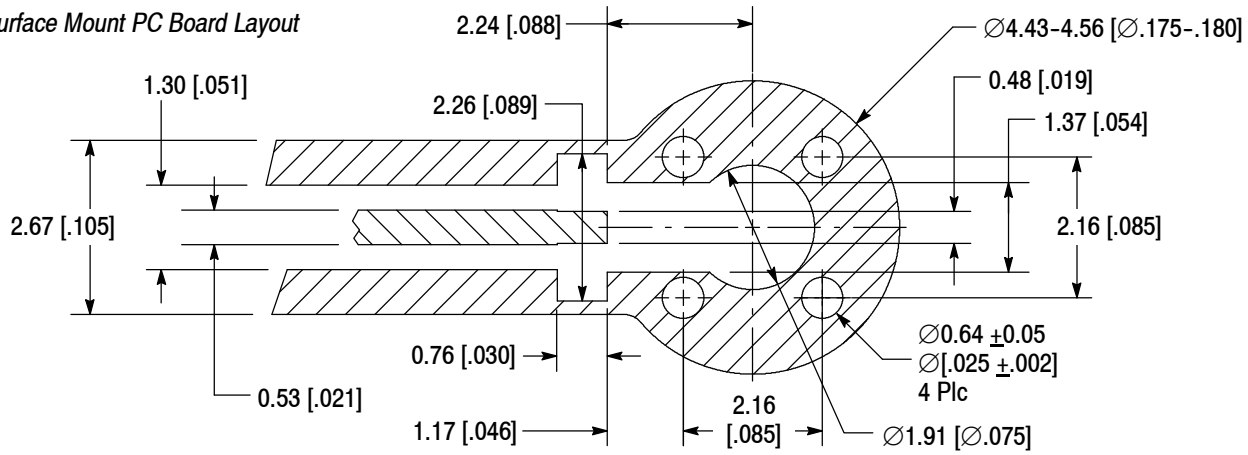

Edge Mount PC Board Layout

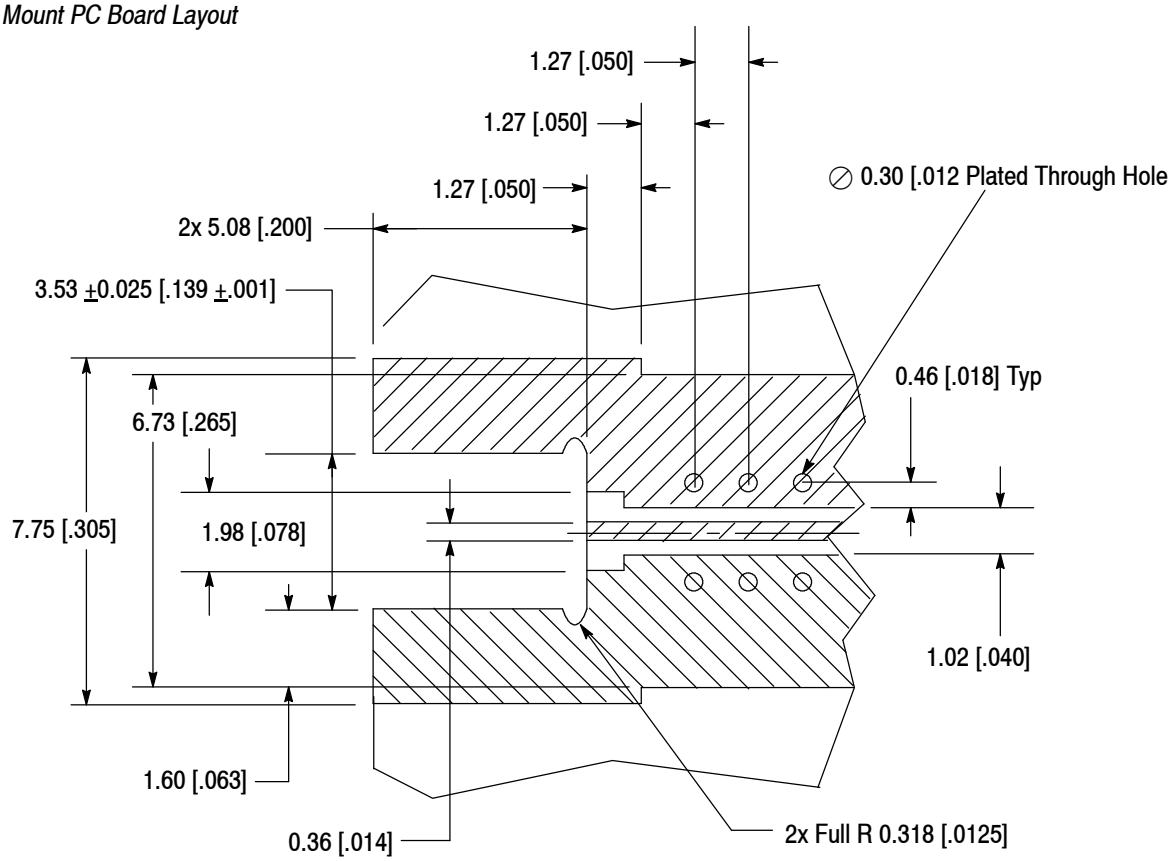

Figure 2

3.5. Spacing

Connectors are able to be placed side-by-side on the pc board when pads are constructed on centerline spacing of 5.23 mm [.206 in.] for surface mount connectors; and 5.74 mm [.226 in.] for edge mount connectors. See Figure 3 for minimum (in-between) spacing.

CAUTION

Connectors should be handled only by the housing to avoid deformation, contamination, or damage to the contact tines.

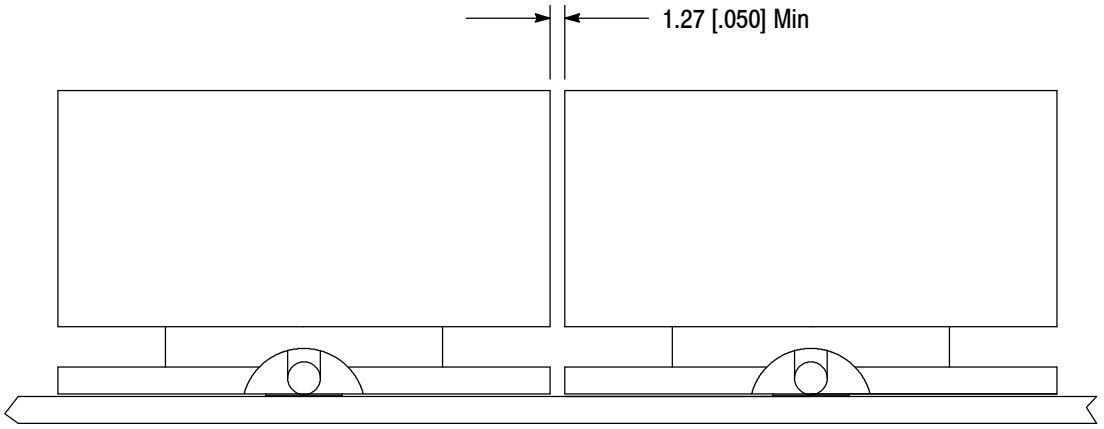

Figure 3

3.6. Connector Placement

Connectors may be placed on the pc board by hand or with robotic equipment. Robotic/gripper placement requires total equipment accuracy of 0.13 mm [.005 in.] to locate the connector for insertion. This includes gripper and fixture tolerances, as well as equipment repeatability. Insertion location will be programmed by a simple pantograph/template system or software package. Optimally, the contact solder tines should be centered on the pc board pads. However, slight misalignment is permissible for the performance classifications specified in Association of Connecting Electronics Industries (IPC)–S–815, “General Requirements for Soldering Electronic Interconnection.” See Figure 4.

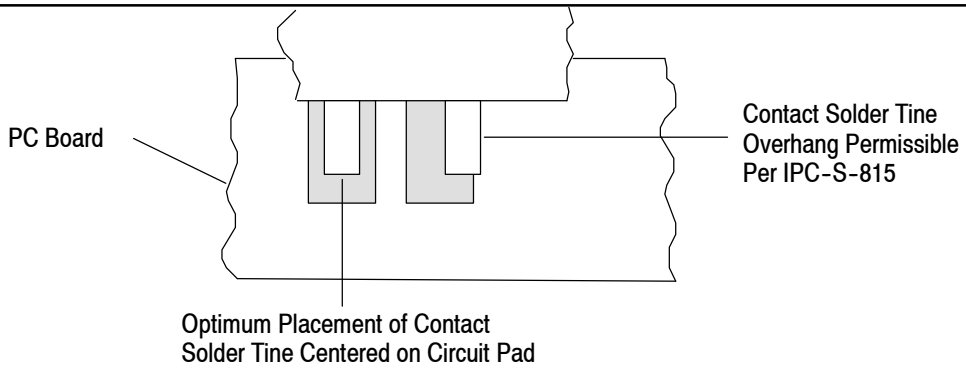

Figure 4

3.7. Soldering

Observe guidelines and procedures when soldering contacts. Solder, clean, and dry all leads to contacts according to the following. The connectors should be soldered using vapor phase reflow (VPR), double–sided, non–focused infrared (IR), forced air convection, or equivalent soldering techniques. All solder joints should conform to the Workmanship Specification 101–21 and IPC–S–815.

A. Flux Selection

Contacts must be fluxed prior to soldering with a mildly active, rosin base flux. Selection of the flux will depend on the type of pc board and other components mounted on the board. Additionally, the flux must be compatible with the wave solder line, manufacturing, health, and safety requirements. Flux that is compatible with the connectors is provided in Figure 5.

FLUX TYPE	ACTIVITY	RESIDUE	COMMERCIAL DESIGNATION	
			KESTER▲	ALPHA⊞
Type RMA (Mildly Activated)	Mild	Noncorrosive	185/197	611

▲Trademark of MacDonald & Co. ⊞ Designation of Alpha Metals Inc.

Figure 5

B. Connectors with SMT Contacts

1. Solderability

The pc board pads must be solderable in accordance with Test Specification 109–11 (Test Method A, non–activated rosin flux) and all other requirements for surface mount contacts specified in this document.

2. Solder Paste Characteristics

a. Alloy type shall be SAC 305; Sn 96.5/Ag 3.0/Cu 0.5
b. Flux incorporated in the paste shall be rosin, mildly active (RMA) type.
c. Paste will be at least 80% solids by volume.
d. Mesh designation –200 to +325 (74 to 44 square micron openings, respectively).
e. Minimum viscosity of screen print shall be 5×10% cp (centipoise).
f. Minimum viscosity of stencil print shall be 7.5×10% cp (centipoise).

3. Solder Volume

NOTE

Solder paste volumes are required as follows (calculated per 50% solids content). Paste volume may vary depending on the composition.

Solder volume for each SMPM Male PC Board Surface Mount Connector must be according to the following:

1.75 mm^3 [.0001068 $in.^3$] per contact solder tine

4. Stencil

The stencil aperture shall be determined by the circuit pad size and stencil thickness. It may be any shape as long as it prevents solder bridging from one pad to another. Generally, the thinner stencil will need a larger aperture to maintain the given volume of solder paste.

NOTE

The stencil layouts illustrated apply to the top (connector) side (unless otherwise noted) of the pc board. For any other variations, refer to the pc board mounting configurations on the appropriate customer drawing to determine modifications necessary to the solder stencils in Figure 2.

CAUTION

All traces must be covered by solder mask in the solder deposit area. Exposed traces could cause bridging and create a short, or wick solder away from the solder tines, producing a weak solder joint.

CAUTION

If a hold–down aperture is required other than that specified, the design must ensure that the connector housing will not sit on the solder deposit.

NOTE

The stencil aperture is the same size as the recommended pc board layout. Refer to Figure 2.

5. Solder Mask

Solder mask is recommended between all pads when soldering connectors with surface mount contacts to minimize solder bridging between pads. The mask must not exceed the height of the pad by more than 0.05 mm [.002 in.]. If a trace is run between adjacent pads on the solder side of the pc board, a solder mask must be applied over the trace to prevent bridging and wicking of solder away from the contact solder tines. Those most suitable are Liquid Photo Imageable and Dry Film.

CAUTION

Since the connector may rest on top of the solder mask, an excessively high mask will allow too much space between the lead and pad for a good solder joint. A solder joint under these conditions would be weak and would not provide long–term performance for the connector.

6. Process

Connectors with surface mount contacts should be soldered using vapor phase (VPR), double-sided, non-focused infrared reflow (IR) or equivalent soldering techniques. Due to many variables involved with the reflow process (i.e., component density, orientation, etc.), it is recommended that trial runs be conducted under actual manufacturing conditions to ensure product and process compatibility. These connectors will withstand the temperature and exposure time specified in Figure 6.

SOLDERING PROCESS	TEMPERATURE (Max)	TIME (At Max Temperature)
IR	220°C [428°F]	3 Minutes

Figure 6

C. Cleaning

After soldering, removal of fluxes, residues, and activators is necessary. Consult with the supplier of the solder and flux for recommended cleaning solvents. Common cleaning solvents that will not affect the connectors or assemblies for the times and temperatures provided without any adverse effects on the connector assembly are listed in Figure 7.

DANGER

Consideration must be given to toxicity and other safety requirements recommended by the solvent manufacturer. Trichloroethylene and Methylene Chloride can be used with no harmful affect to the connectors; however, TE does not recommend them because of the harmful occupational and environmental effects. Both are carcinogenic (cancer-causing) and Trichloroethylene is harmful to the earth's ozone layer.

NOTE

If you have a particular solvent that is not listed, contact TE Tooling Assistance Center or Product Information at the number on the bottom of page 1.

CLEANER		TIME (Minutes)	TEMPERATURES (Maximum)	
NAME	TYPE		CELSIUS	FAHRENHEIT
Alpha 2110■	Aqueous	1	132	270
Bioact EC-7◆	Solvent	5	100	212
Butyl Carbitol●	Solvent	1	Room Ambient	
Isopropyl Alcohol	Solvent	5	100	212
Kester 5778❖	Aqueous	5	100	212
Kester 5779❖	Aqueous	5	100	212
Loncoterge 520●	Aqueous	5	100	212
Loncoterge 530●	Aqueous	5	100	212
Terpene Solvent	Solvent	5	100	212

■ Product of Fry's Metals, Inc. ◆ Product of Petroferm, Inc. ● Product of Union Carbide Corp. ❖ Product of Litton Systems, Inc.

Figure 7

D. Drying

CAUTION

Excessive temperatures may cause housing and plating degradation.

When drying cleaned assemblies and pc boards, temperatures to which the connectors are subject should not exceed 220°C [428°F] for more than 3 minutes.

3.8. Checking Installed Connector

All solder joints should comply with Workmanship Specification 101-21. For typical fillets for surface mount tine requirements, refer to Figure 8.

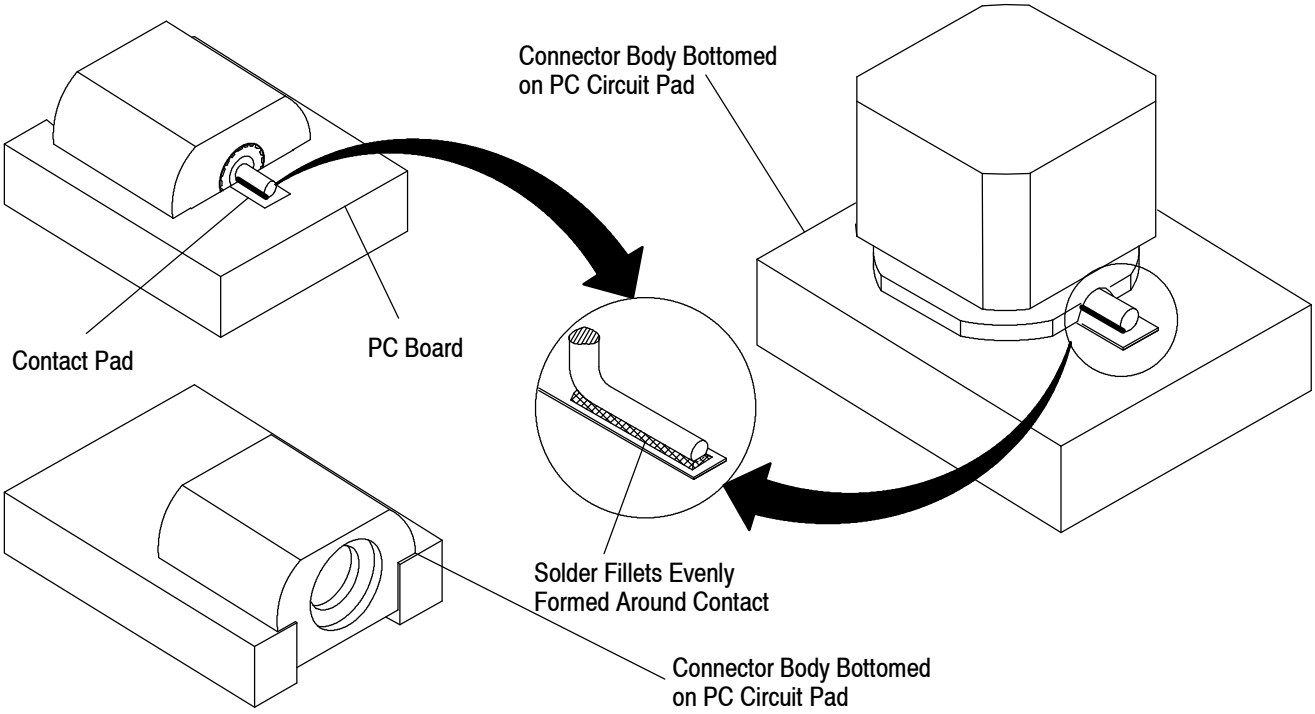

Figure 8

3.9. Removal and Repair

SMPM Male PC Board Surface and Edge Mount Connectors are not repairable. If a connector is damaged, it must be removed from the pc board and replaced with a new one. Industry wide de-soldering methods are acceptable.

4. QUALIFICATIONS

SMPM Male PC Board Surface and Edge Mount Connectors are not required to be agency evaluated or approved.

5. TOOLING

5.1. Robotic Equipment

NOTE

Automatic machine placement is recommended for connectors instead of manual placement with surface mount contacts.

The robotic equipment must have a true position accuracy tolerance of 0.25 mm [.010 in.] to properly locate the connectors. This includes gripper and fixture tolerances as well as equipment repeatability.

5.2. PC Board Support

For automatic machine placement, a pc board support must be used to prevent bowing of the pc board during the placement of connectors. It should have flat surfaces with holes or a channel large enough and deep enough to receive any protruding components. The pc board support must be customer made.

6. VISUAL AID

Figure 9 shows a typical application of SMPM Male PC Board Surface and Edge Mount Connectors. This illustration should be used by production personnel to ensure a correctly applied product. Applications which DO NOT appear correct should be inspected using the information in the preceding pages of this specification and in the instructional material shipped with the product or tooling.

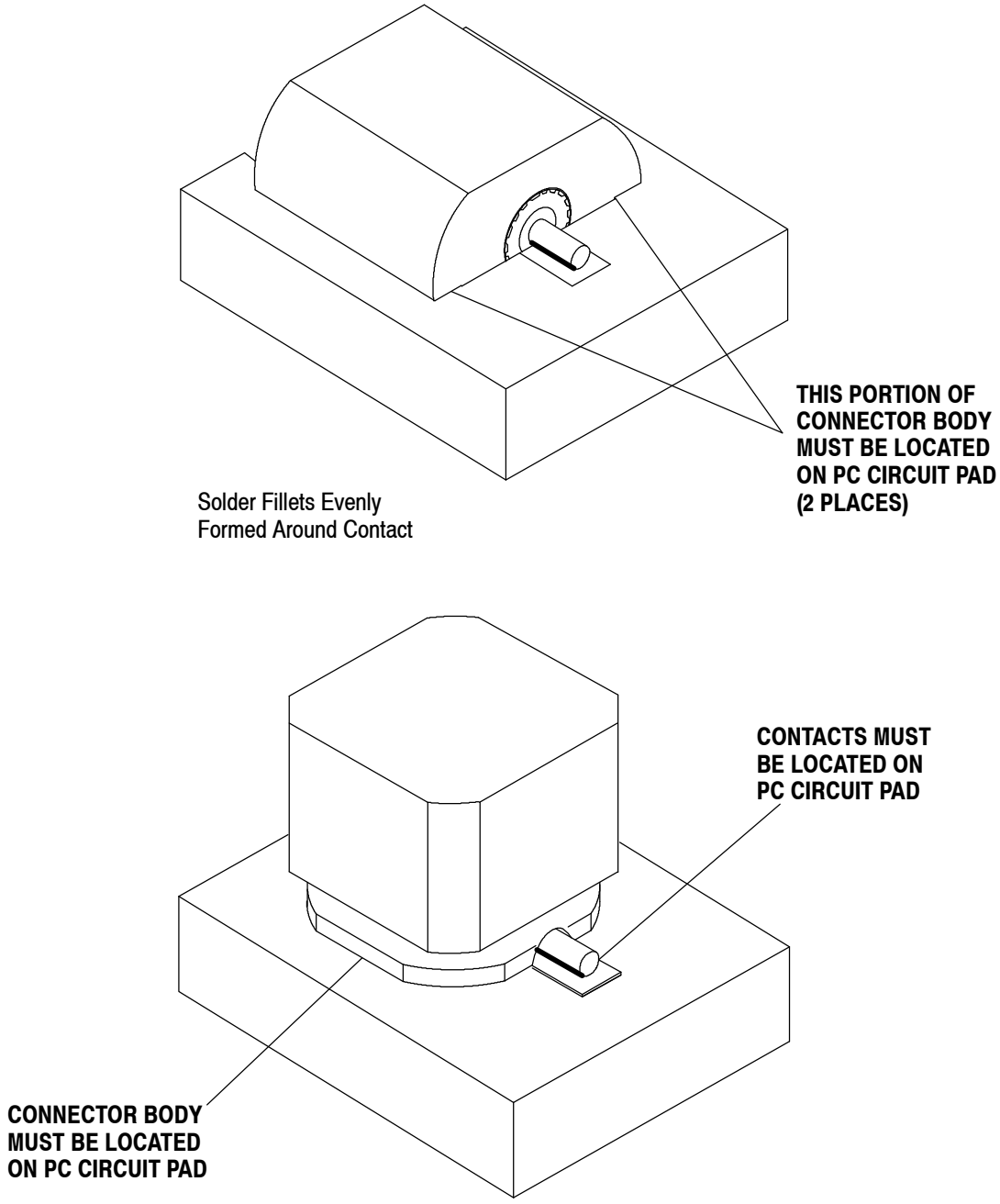

FIGURE 9. VISUAL AID