AMP INCORPORATED
HARRISBURG, PA. 17105

AMP* COAXICON*
50 OHM, R.F. CONNECTORS
SERIES TNC JACKS

IS 2299-2

RELEASED	12-9-70
REVISED	12-9-74

Use the following table to select series TNC Connectors and recommended Crimping Tool. Strip cable to dimensions shown in figure referenced in table. Refer to the crimping procedure found in the tool instruction sheet (IS) listed in the table.

Use the procedure shown below to assemble crimped contact and connector.

The following publications contain information on additional series TNC Connectors.

Plugs	2299-1
Bulkhead Jacks	2299-3
Panel Jacks	2299-4
Rt. Angle Plugs	2299-5

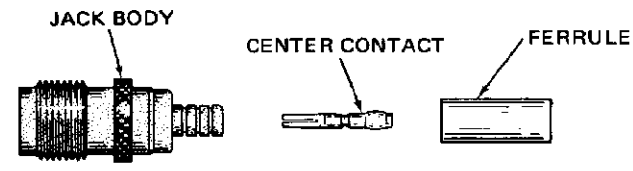

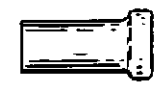

NOTE: WEATHERPROOF CONNECTORS INCLUDE THIS TYPE FERRULE, CONTAINING A RUBBER SEAL. CONNECTOR BODY ALSO CONTAINS A RUBBER SEAL OVER SUPPORT SLEEVE.

CABLE (RG/U Coaxial Cable Manufactured in accordance with MIL-C-17D)	SILVER PLATED P/N			TARNISH RES.		CABLE STRIP DIM.	CRIMPING TOOL	
	Government Desig. M39012/*	Standard	Weather-proof	Standard	Weather-proof		Part No.	I.S.
55A, 223	27-0016	225346-1	225551-1	225400-1	225556-1	FIG. 1	220045-2	2336
58A, 58C	27-0005	225346-2	225551-2	225400-2	225556-2	FIG. 1	220045-2	2336
59, 59A, 59B 62, 62A, 62B	27-0007	225346-3	225551-3	225400-3	225556-3	FIG. 4	220045-3	2330
71B	27-0009	225346-4	225551-4	225400-4	225556-4	FIG. 4	220045-3	2330
141, 141A	27-0015	225346-5	225551-5	225400-5	225556-5	FIG. 1	220045-2	2336
142, 142A, 142B	27-0006	225346-6	225551-6	225400-6	225556-6	FIG. 1	220045-2	2336
8, 8A, 213	———	225346-7	225551-7	225400-7	225556-7	FIG. 2	220015-1	2331
9, 9A, 214	———	225346-8	225551-8	225400-8	225556-8	FIG. 3	220015-1	2331
115A	———	225346-9	225551-9	225400-9	225556-9	FIG. 3	220015-1	2331
225	———	1-225346-2	1-225551-2	1-225400-2	1-225556-2	FIG. 3	220015-1	2331
F.E.P. 115A (TIMES MI 5164)	———	———	1-225551-4	———	1-225556-4	FIG. 3	220015-1	2331

* Applies only to Silver-plated items

© Copyright 1970, 1972, 1974 by AMP Incorporated, Harrisburg, Pa. All International Rights Reserved. AMP Incorporated products covered by U.S. and Foreign Patents and/or Patents Pending.

TYPICAL ASSEMBLY PROCEDURE

1. Slide Ferrule on Cable, then strip Cable. Crimp Center Contact (See Tool Instructions referenced in table).
2. Insert Contact into Connector with Braid over Support Sleeve.
3. Pull back lightly on Cable to make sure that Contact is being held captive by the internal locking feature, then push Cable forward to insure proper contact and dielectric position.
4. Slide Ferrule over Braid and crimp Ferrule. (See Tool Instructions referenced in table.)

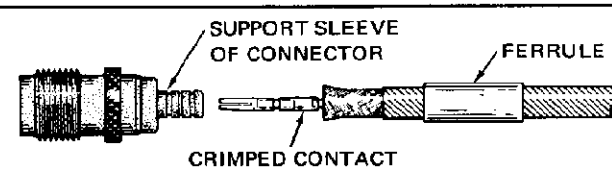

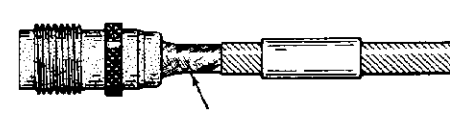



★ Trademark of AMP Incorporated

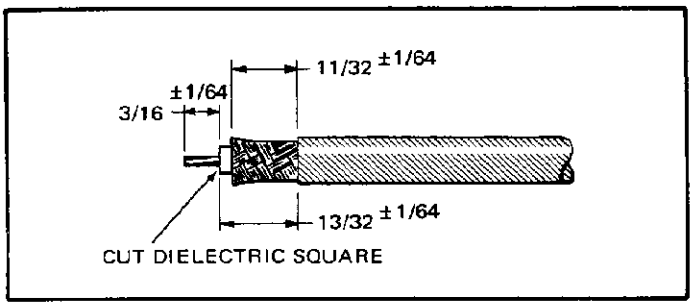

Fig. 1

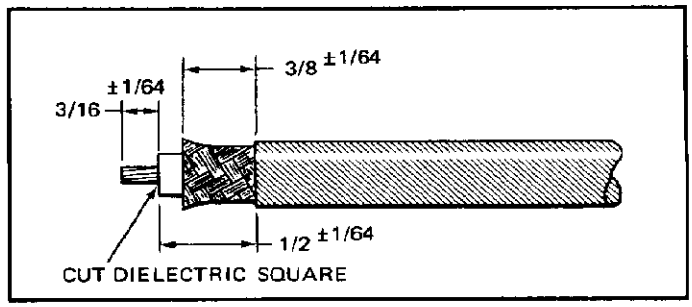

Fig. 2

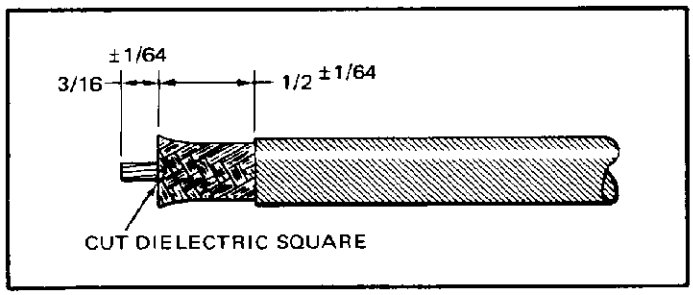

Fig. 3

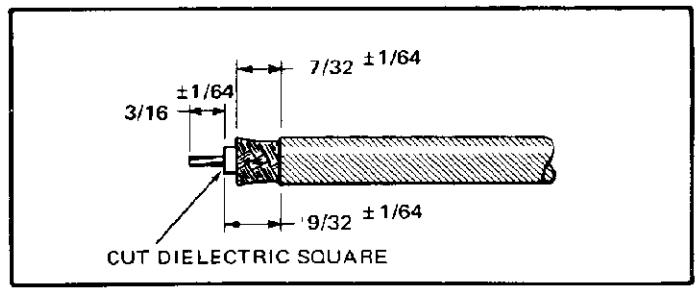

Fig. 4