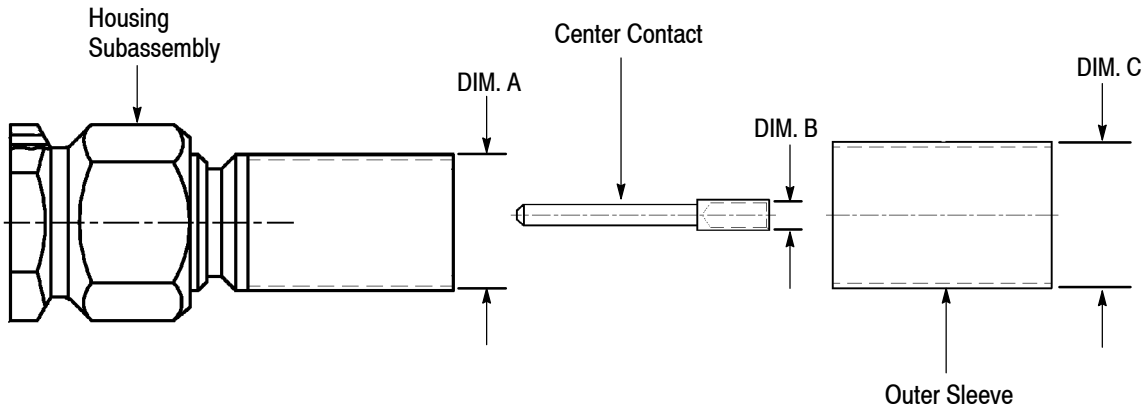

TYCO ELECTRONICS PART NO.	OMNI-SPECTRA PART NO.	MILITARY PART NO. M39012/55B	CABLE TYPE	STRIP FIGURE	CRIMP CLOSURE	DIM. A	DIM. B	DIM. C
1051766-1	2031-8012-92	3012	RG174/U	3A	C	1.7018 [.067]	0.5588 [.022]	3.2512 [.128]
1084480-1	2031-8012-92	3012	RG316/U	3A				
1051797-1	2031-8112-92	3112●	RG174/U RG316/U	3A	C	1.7018 [.067]	0.5588 [.022]	3.2512 [.128]
1051768-1	2031-8014-92	3014	RG58/U	3B	B	3.098 [.122]	1.0414 [.041]	5.207 [.205]
1051769-1	2031-8015-92	3015	RG142/U	3C	B	3.098 [.122]	1.0414 [.041]	5.5626 [.219]
1051770-1	2031-8016-92	3016	RG/223/U	3B	B	3.098 [.122]	1.0414 [.041]	5.5626 [.219]
1051801-1	2031-8016-92	3116●	RG/223/U	3B	B	3.098 [.122]	1.0414 [.041]	5.5626 [.219]
1484541-1	2031-8017-92	3017	RG303/U	3B	B	3.098 [.122]	1.0414 [.041]	5.207 [.205]

●No Safety Wire Holes

Figure 1

1. INTRODUCTION

These instructions cover the use of the SMA Straight Cable Plug Connectors listed in Figure 1. All of these connectors are crimp-type attachment connectors.

Also listed in Figure 1, are the corresponding Omni-Spectra Part Numbers, Military Part Numbers, the cable type the plugs are to be crimped to, the crimp closures, and the A, B, and C dimensions.

NOTE

Dimensions on this sheet are in millimeters [with inch equivalents in brackets]. Figures and illustrations are for reference only and are not drawn to scale.

Figure 2 contains the tools required to crimp the SMA Straight Cable Plugs to cable.

TYCO ELECTRONICS PART NO.	OMNI-SPECTRA PART NO.	DESCRIPTION
1055454-1	2098-5221-10	Center Contact Holder
1055236-1	2098-0105-54	Crimp Tool

Figure 2

2. ASSEMBLY PROCEDURE

2.1. Preparing Coaxial Cable End

1. Place the outer sleeve on the cable.

2. Remove the end portion of the cable jacket to expose the cable braid. Refer to Figure 3.

©2009 Tyco Electronics Corporation, Harrisburg, PA
All International Rights Reserved
TE logo and Tyco Electronics are trademarks.
*Trademark. Other products, logos, and company names used are the property of their respective owners.

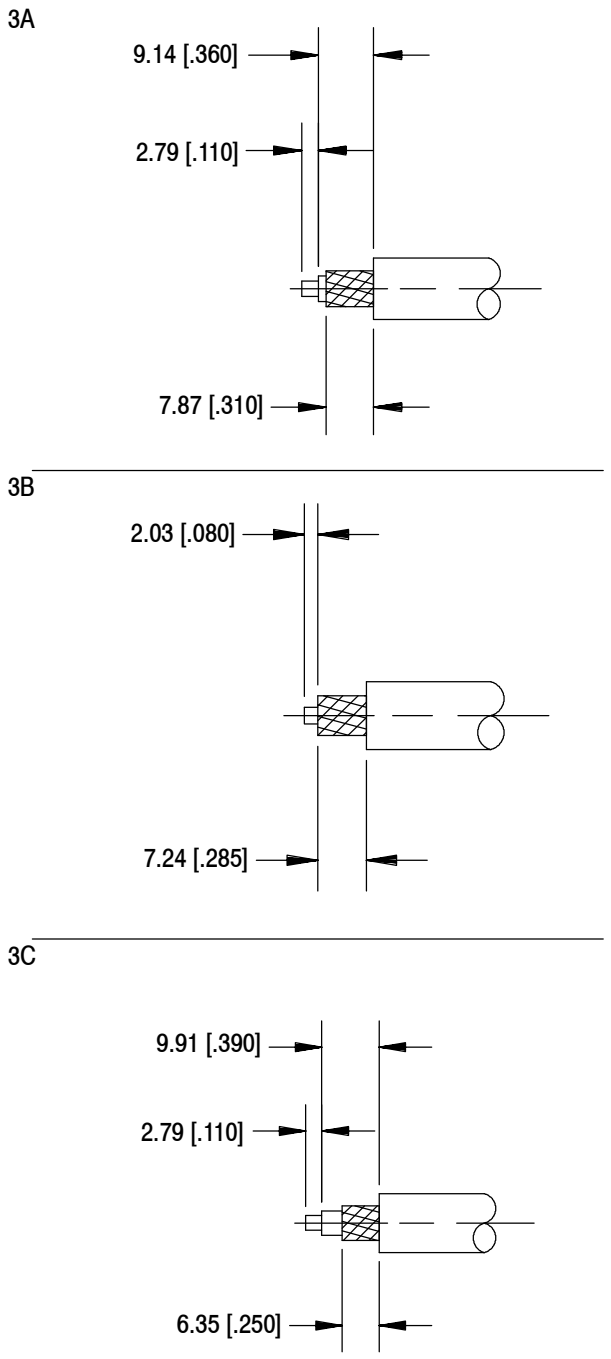

Figure 3

3. Trim the cable braid to the length shown in Figure 3.

4. Trim the cable dielectric to length.

5. Trim the inner conductor to length.

6. Flare the cable braid.

2.2. Soldering the Center Contact to the Cable Inner Conductor (Figure 4)

1. Tin the inner conductor of the cable.

2. Place the center contact in the holder.

3. Heat the center contact and push it over the inner conductor of the cable to rest firmly against the cable dielectric.

4. Remove the excess solder.

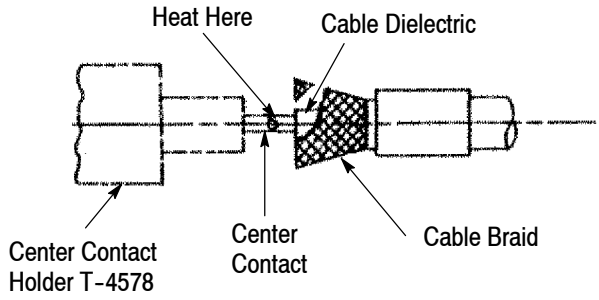

Figure 4

2.3. Crimping the Cable Subassembly to the Housing Subassembly

1. Position and secure the housing subassembly in a small bench vise.

2. Insert the cable subassembly into the housing subassembly and seat it firmly.

3. Slide the outer sleeve over the flared portion of the cable braid.

4. Hold the cable (firmly seated) and crimp the outer sleeve in place.

5. Trim and remove the excess cable braid.

The assembly is now complete and should appear as shown in Figure 5.

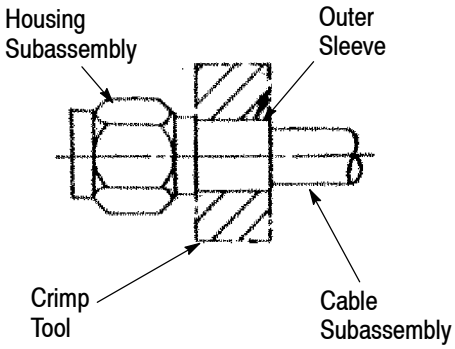

Figure 5

3. REVISION SUMMARY

- Updated document to corporate requirements
- Added new column to table in Figure 1
- Added new artwork to Figure 3