C0805C473J5JACAUTO

SMD Auto U2J, Ceramic, 0.047 uF, 5%, 50 VDC, U2J, SMD, MLCC, Ultra-Stable, Low Loss, Automotive Grade, 0.7 mm, 0805 / 2012

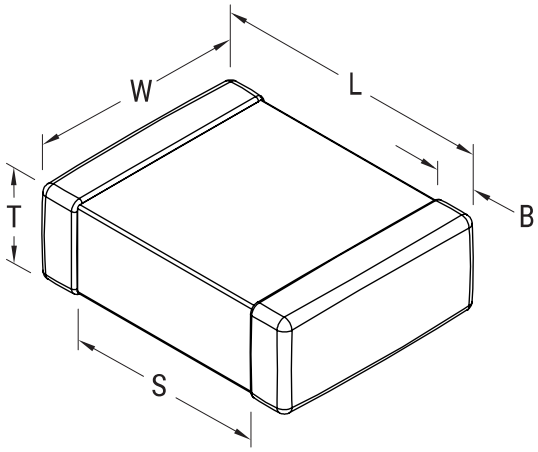

Click here for the 3D model.

General Information	
Series	SMD Auto U2J
Style	SMD Chip
Description	SMD, MLCC, Ultra-Stable, Low Loss, Automotive Grade
Features	Ultra-Stable, Low Loss, Automotive Grade
RoHS	Yes
Termination	Tin
Marking	No
Qualifications	AEC-Q200
AEC-Q200	Yes
Typical Component Weight	14 mg
Shelf Life	78 Weeks
MSL	1

Dimensions	
L	2mm +/-0.2mm
W	1.25mm +/-0.2mm
T	1.25mm +/-0.15mm
S	0.7mm MIN
B	0.5mm +/-0.25mm
Case Code (EIA / mm)	0805 / 2012

Packaging Specifications	
Packaging	T&R, 180mm, Plastic Tape
Packaging Quantity	2500

Specifications	
Capacitance	0.047 uF
Measurement Condition	1 kHz 1.0Vrms
Tolerance	5%
Voltage DC	50 VDC
Dielectric Withstanding Voltage	125 VDC
Temperature Range	-55/+125°C
Temp. Coefficient	U2J
Capacitance Change with Reference to +25°C and 0 VDC Applied (TCC)	-750+/-120 ppm/C, 1kHz 1.0Vrms
Dissipation Factor	0.1% 1 kHz 1.0Vrms
Aging Rate	0.1% Loss/Decade Hour: Referee Time is 1000 Hours
Insulation Resistance	21.2766 GOhms

Statements of suitability for certain applications are based on our knowledge of typical operating conditions for such applications, but are not intended to constitute - and we specifically disclaim - any warranty concerning suitability for a specific customer application or use. This Information is intended for use only by customers who have the requisite experience and capability to determine the correct products for their application. Any technical advice inferred from this Information or otherwise provided by us with reference to the use of our products is given gratis, and we assume no obligation or liability for the advice given or results obtained.

© 2006 - 2025 YAGEO