P409EL474M275AH101

P409, Film, Metallized Paper, Resistor/Capacitor, 0.47 uF, 20%, 630 VDC, 85°C, 25.4 mm

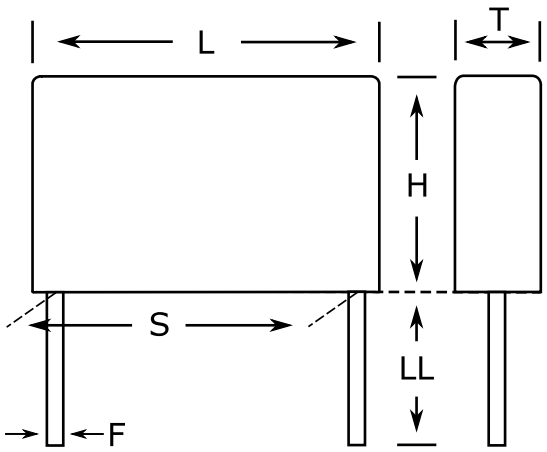

Click here for the 3D model.

General Information	
Series	P409
Dielectric	Metallized Paper
Style	Radial
Features	RC Unit approved
RoHS	Yes
Termination	Tinned Wire
Lead	Wire Leads
Qualifications	ENEC, UL, cUL
AEC-Q200	No
Construction	Molded
Typical Component Weight	13.5 g
Miscellaneous	Resistor Tolerance: +/-30%. Resistor= 100 Ohms.

Dimensions	
L	30.5mm MAX
H	22mm MAX
T	15.3mm MAX
S	25.4mm +/-0.4mm
LL	30mm +5mm
F	1mm +/-0.05mm

Packaging Specifications	
Packaging	Bulk, Bag
Packaging Quantity	75

Specifications	
Capacitance	0.47 uF
Tolerance	20%
Voltage DC	630 VDC
Voltage AC	275 VAC
Temperature Range	-40/+85°C
Rated Temperature	85°C
Insulation Resistance	2.128 GOhms
Safety Class	X2

Statements of suitability for certain applications are based on our knowledge of typical operating conditions for such applications, but are not intended to constitute - and we specifically disclaim - any warranty concerning suitability for a specific customer application or use. This Information is intended for use only by customers who have the requisite experience and capability to determine the correct products for their application. Any technical advice inferred from this Information or otherwise provided by us with reference to the use of our products is given gratis, and we assume no obligation or liability for the advice given or results obtained.

© 2006 - 2025 YAGEO